MtronPTI ...when timing matters
2525 Shader Road Orlando Florida 32804 USA
Phone: 407-298-2000 Fax: 407-293-2979
Website: www.mtronpti.com AMEX: LGL

Specification for a Connectorized Crystal Filter
MtronPTI P/N: XF9370

I. General & Electrical Requirements

1. Center Frequency (F_{ON}): 73.0MHz
2. 1dB Bandwidth: ≥ ±80.0kHz
3. Insertion Loss (@ peak of transmission within the 1dB bandwidth): ≤ 3.0dB
4. Passband Ripple (peak-valley): ≤ 1dB
5. Input/Output VSWR: ≤ 1.4:1
6. Group Delay
   Absolute Delay: 2.74*μsec* ±0.25 *μsec*
   Delay Variation (any 5kHz increment within F_{ON} ±35kHz): ≤ 0.75*ηsec*
7. Rejection:
   ≥ 25dBc: 59.5MHz to 72.6MHz
   ≥ 25dBc: 73.57MHz to 74.63MHz
8. Input Signal Level: ≤ 0dBm
9. Z_S/Z_L: 50Ω nominal

II. Environmental & Physical Requirements:

1. Temperature Range
   Operating: -40°C to +85°C
   Storage: -45°C to +90°C
2. Package: Connectorized (ref drawing Figure 1)

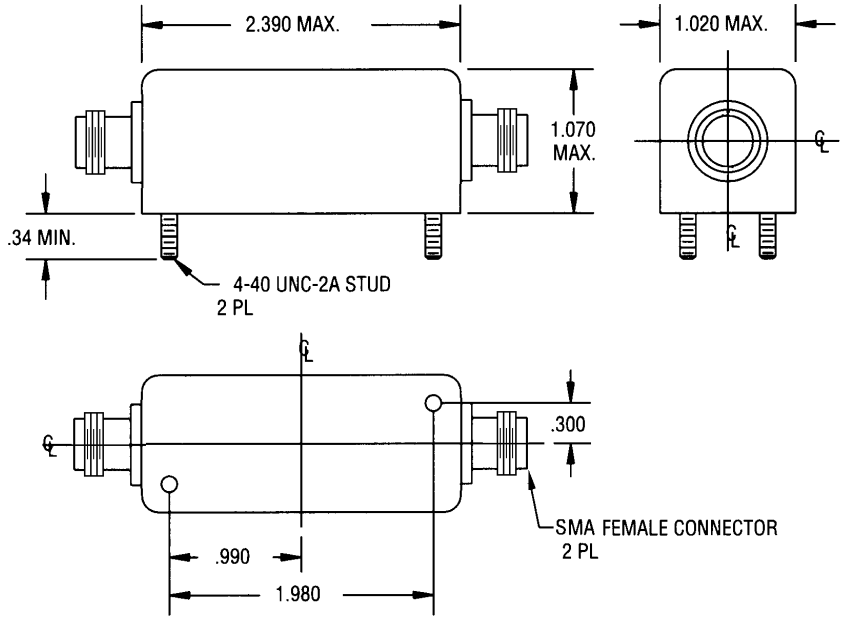

Figure 1 – Filter Package Outline Drawing

Proprietary Document Information contained herein is proprietary to MtronPTI and is submitted in confidence.
Information may not be copied or divulged without written permission from MtronPTI.

2525 Shader Road Orlando Florida 32804 USA
Phone: 407-298-2000 Fax: 407-293-2979
Website: www.mtronpti.com AMEX: LGL

Specification for a Connectorized Crystal Filter
MtronPTI P/N: XF9370

III. Design Simulation Plots:

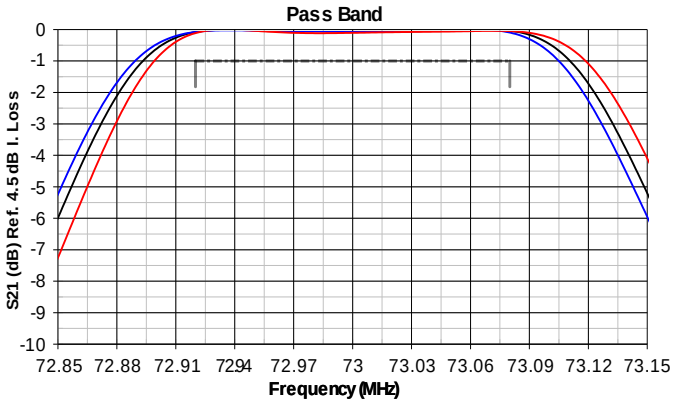

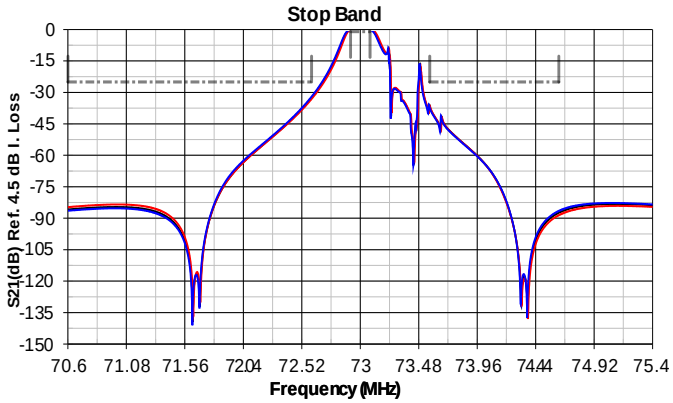

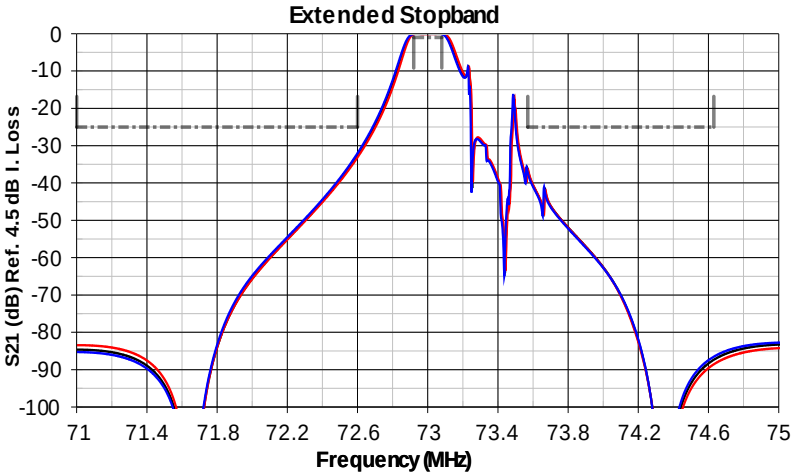

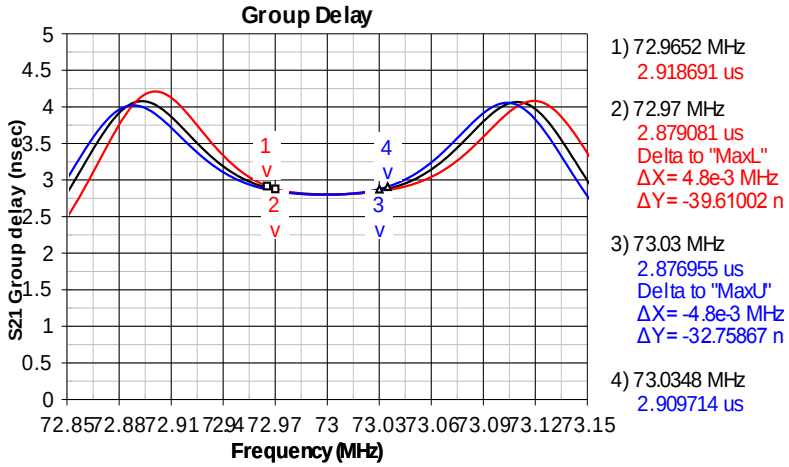

Proprietary Document Information contained herein is proprietary to MtronPTI and is submitted in confidence.
Information may not be copied or divulged without written permission from MtronPTI.