XFMRS

DWN.: 李小锋 CHK.: 廖玉坤 APP.: J Ng

DATE: Sep-30-04 DATE: Sep-30-04 DATE: Sep-30-04

XF7435 SERIES INDUCTORS

* LOW PROFILE SMD TYPE FOR HIGH CURRENT APPLICATION
* TAPE AND REEL PACKAGING FOR HIGH VOLUME MANUFACTURING
  1000 PCS PER 13"REEL
* FOR PROTABLE TELEPHONES, PERSONAL COMPUTERS, HDD APPLICATIONS
* TEMP. RISE; 30°C TYPICAL ABOVE 60°C AMBIENT
* OPERATING TEMP.: -40°C TO +85°C
* FLAMABILITY RATING: UL94V-0

Mechanical Dimensions:

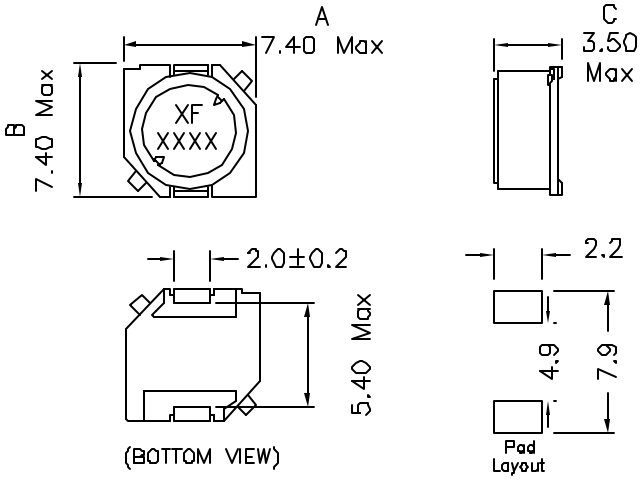

Sechematic:

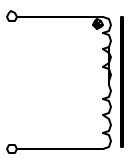

UNLESS OTHERWISE SPECIFIED
TOLERANCES:
.xx ±0.25
Dimensions in MM

Part Number *	INDUCTANCE uH	Test Frequency (Hz)	Resistance DCR Ohms Max	Rated Current IDC Max (A)	Marking *
XF7435-1R0X	1.0	1K	0.019	3.12	1R0X
XF7435-1R5X	1.5	1K	0.023	2.85	1R5X
XF7435-2R2X	2.2	1K	0.028	2.66	2R2X
XF7435-3R3X	3.3	1K	0.035	2.26	3R3X
XF7435-4R7X	4.7	1K	0.043	1.96	4R7X
XF7435-6R8X	6.8	1K	0.055	1.76	6R8X
XF7435-100X	10	1K	0.080	1.34	100X
XF7435-120X	12	1K	0.090	1.23	120X
XF7435-150X	15	1K	0.120	1.09	150X
XF7435-180X	18	1K	0.130	0.99	180X
XF7435-220X	22	1K	0.150	0.90	220X
XF7435-270X	27	1K	0.210	0.81	270X
XF7435-330X	33	1K	0.250	0.72	330X
XF7435-390X	39	1K	0.310	0.67	390X
XF7435-470X	47	1K	0.350	0.60	470X
XF7435-560X	56	1K	0.430	0.55	560X
XF7435-680X	68	1K	0.520	0.50	680X
XF7435-820X	82	1K	0.600	0.46	820X
XF7435-101X	100	1K	0.790	0.41	101X

OCL TEST: 1.0KHz, 0.5V

* "X" specify inductor tolerance: (K±10%, L±15%, M±20%, N±30%)