1. Mechanical Dimensions:

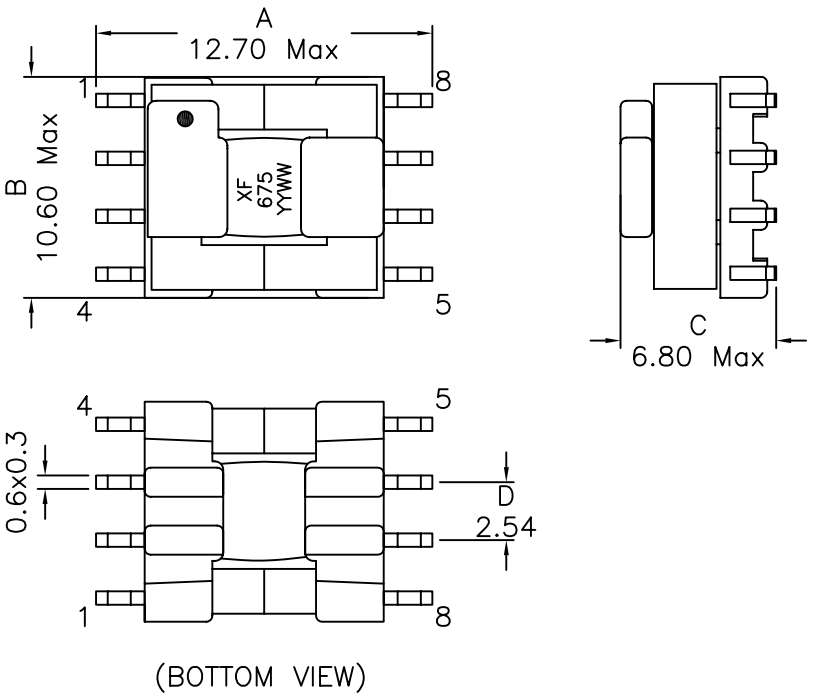

Notes:

1. Solderability: Leads shall meet MIL-STD-202G, Method 208H for solderability.
2. Flammability: UL94V-0
3. ASTM oxygen index: > 28%
4. Insulation System: Class F 155°C. UL file E151556
5. Operating Temperature Range: All listed parameters are to be within tolerance from -40°C to +85°C
6. Storage Temperature Range: -55°C to +125°C
7. Aqueous wash compatible
8. SMD Lead Coplanarity: ±0.004"(0.102mm)
9. Electrical and mechanical specifications 100% tested
10. RoHS Compliant Component

2. Schematic:

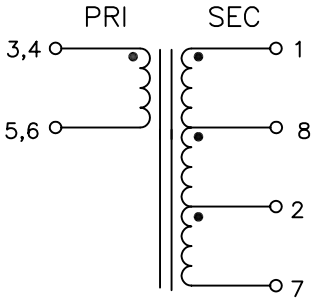

3. Electrical Specifications: @25°C

OCL: Pins 3,4-5,6 675-850nH±10% @100KHz 0.1V, Ls Scale
LL: Pins 3,4-5,6 0.16uH Max @100KHz 10mV, Ls Scale, Short all else

DCR: Pins 3-6 0.060 Ohms Max
DCR: Pins 4-5 0.070 Ohms Max
DCR: Pins 1-8 0.440 Ohms Max
DCR: Pins 8-2 0.480 Ohms Max
DCR: Pins 2-7 0.520 Ohms Max
TURNS RATIO: Pins (3-6):(4-8):(1-8):(8-2):(2-7)= 1.000:1.000:2.667:2.667:2.667±5%
HIPOT: 500Vac, PRI to SEC, All Wdgs to Core

DOC REV: A/1

XFMRS Inc www.XFMRS.com	Title: Flyback Transformer		
UNLESS OTHERWISE SPECIFIED TOLERANCES: .xx ±0.25 Dimensions in MM	P/N: XF6759-E8		REV. A
	DWN.	Juan Mao	Jul-08-09
	CHK.	YK Liao	Jul-08-09
SHEET 1 OF 1	APP.	BW	Jul-08-09

PROPRIETARY Document is the property of XFMRS Group & is not allowed to be duplicated without authorization.