1. Mechanical Dimensions:

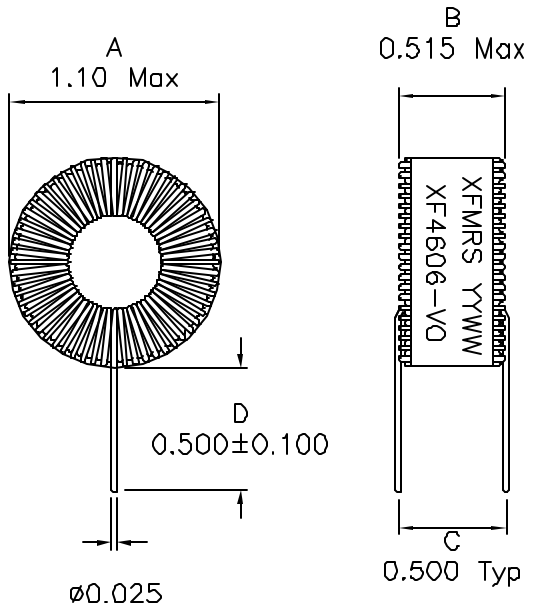

2. Schematic:

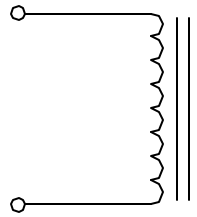

3. Electrical Specifications:

OCL: 460uH±10% @100KHz 0.1V

DCR: 0.180 Ohms Max

Rated Current: 3.0Adc

Notes:

1. Solderability: Leads shall meet MIL-STD-202, Method 208D for solderability.
2. Flammability: UL94V-0
3. ASTM oxygen index: > 28%
4. Insulation System: Class F 155°C. UL file E151556
5. Operating Temperature Range: All listed parameters are to be within tolerance from -40°C to +85°C
6. Storage Temperature Range: -55°C to +125°C
7. Aqueous wash compatible

DOC REV: A/1

XFMRS Inc.	Title: TOROIDAL INDUCTOR		
UNLESS OTHERWISE SPECIFIED TOLERANCES: .xxx ±0.010 Dimensions in Inch	P/N: XF4606-VQ		REV. A
	DWN.	廖玉坤	Apr-29-04
	CHK.	李清儿	Apr-29-04
SHEET 1 OF 1	APP.	Isaiah M	Apr-29-04

PROPRIETARY Document is the property of XFMRS Group & is not allowed to be duplicated without authorization.