1. Mechanical Dimensions:

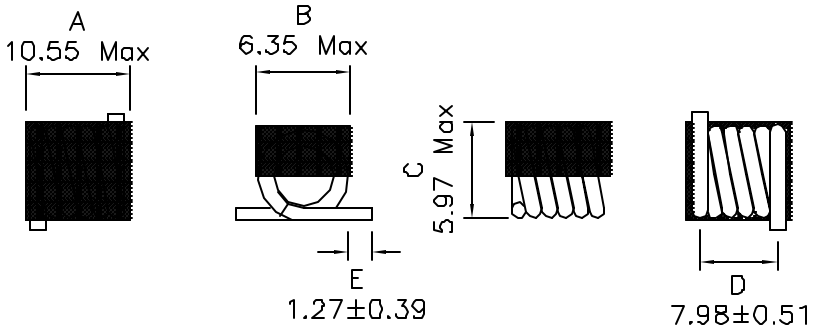

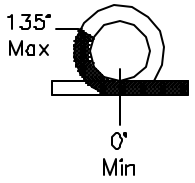

Strip Length

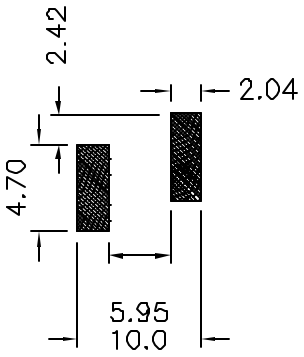

2. Electrical Specification:

INDUCTANCE: 491nH±5%

Q: 95 Min

TEST FREQ: 50MHz

SRF: 535MHz Min

DCR: 65mOhms Max

Idc: 2.0A Max

Turns: 19

Notes:

1. Solderability: Leads shall meet MIL-STD-202, Method 208D for solderability.
2. Flammability: UL94V-0
3. ASTM oxygen index: > 28%
4. Insulation System: Class F 155°C. UL file E151556
5. Operating Temperature Range: All listed parameters are to be within tolerance from -40°C to +125°C
6. Storage Temperature Range: -55°C to +125°C
7. Aqueous wash compatible
8. SMD Lead Coplanarity: ±0.004"(0.102mm)
9. Moisture Sensitivity: Level 3
10. Electrical and mechanical specifications 100% tested
11. RoHS Compliant Component

DOC REV: A/1

XFMRS Inc. www.XFMRS.com	Title: Micro Spring Air Core Inductors		
UNLESS OTHERWISE SPECIFIED TOLERANCES: .xxx ±0.25 Dimensions in mm	P/N: XF132-19SMJ		REV. A
	DWN.	Juan Mao	Aug-29-06
	CHK.	YK Liao	Aug-29-06
SHEET 1 OF 1	APP.	BW	Aug-29-06

PROPRIETARY Document is the property of XFMRS Group & is not allowed to be duplicated without authorization.