1. Mechanical Dimensions:

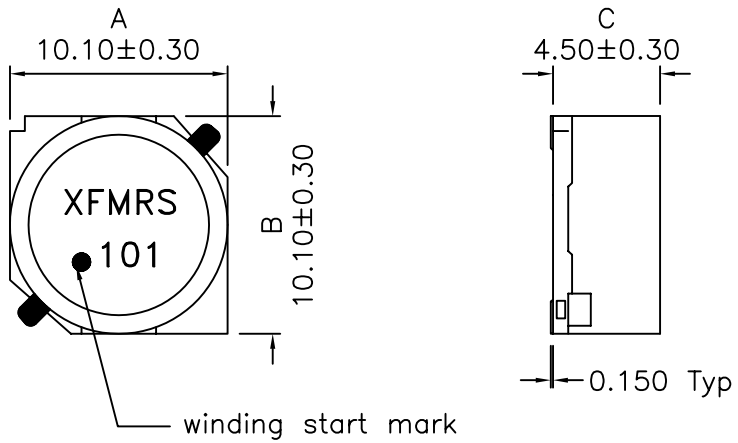

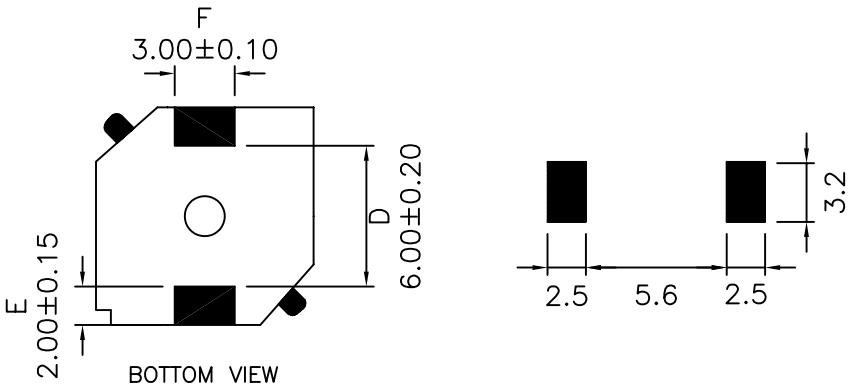

2. Schematic:

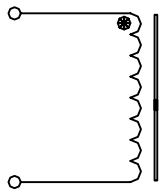

3. Electrical Specifications:

OCL: 100uH±20% @1.0KHz 500mV

DCR: 0.200 Ohms ±20%

IDC : 1.00Adc Max (Based on 13% Drop in OCL)

Notes:

1. Solderability: Leads shall meet MIL-STD-202, Method 208D for solderability.
2. Flammability: UL94V-0
3. ASTM oxygen index: > 28%
4. Temperature rating: 155°C. UL file E151556
5. Operating Temperature Range: All listed parameters are to be within tolerance from -20°C to +90°C
6. Storage Temperature Range: -40°C to +90°C

DOC REV: A/1

PROPRIETARY Document is the property of XFMRS Group & is not allowed to be duplicated without authorization.

XFMRS Inc	Title: XF10145S SERIES INDUCTORS		
UNLESS OTHERWISE SPECIFIED TOLERANCES: N/A Dimensions in MM	P/N: XF10145S-101M		REV. A
	DWN.	Juan Mao	Apr-27-04
	CHK.	YK Liao	Apr-27-04
SHT 1 OF 1	APP.	MS	Apr-27-04