1. Mechanical Dimensions:

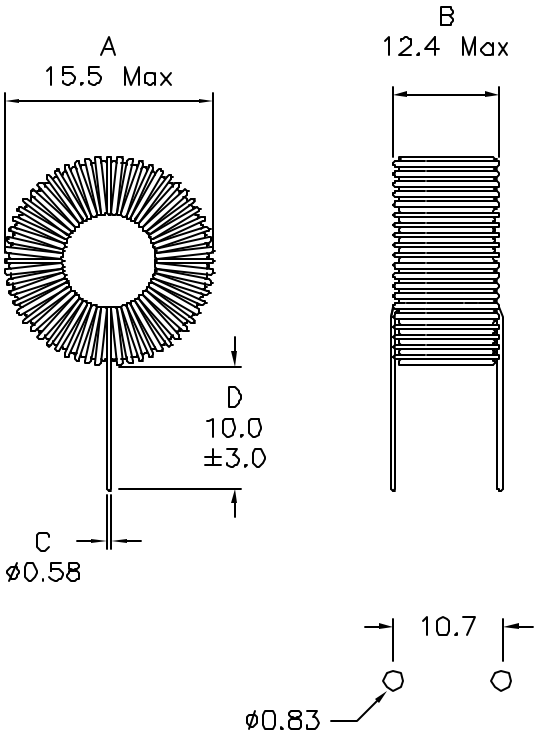

2. Schematic:

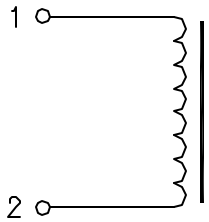

3. Electrical Specifications:

Inductance: 100uH±20% @100KHz,0.25V

DC Resistance: 0.106 Ohms Max

Isat: 2.4Adc

Volt–uS: 27.5

Energy Storage: 197uJ

Notes:

1. Solderability: Leads shall meet MIL–STD–202G, Method 208H for solderability.
2. Flammability: UL94V–0
3. ASTM oxygen index: > 28%
4. Insulation System: Class F 155°C. UL file E151556
5. Operating Temperature Range: All listed parameters are to be within tolerance from –40°C to +85°C
6. Storage Temperature Range: –55°C to +125°C
7. Aqueous wash compatible
8. Electrical and mechanical specifications 100% tested
9. RoHS Compliant Component
10. Operating Temperature Range: –40°C to +85°C
11. Tinned length is the same as the lead length.
12. Do not epoxy leads to core.

XFMRS Inc. www.XFMRS.com	Title: TOROIDAL INDUCTOR		
UNLESS OTHERWISE SPECIFIED TOLERANCES: .xxx ±0.25 Dimensions in MM	P/N: XF1006-V052		REV. A
	DWN.	廖玉坤	May-17-07
	CHK.	李清儿	May-17-07
SHEET 1 OF 1	APP.	BW	May-17-07

DOC. REV. A/2

PROPRIETARY Document is the property of XFMRS Group & is not allowed to be duplicated without authorization.