1. Mechanical Dimensions:

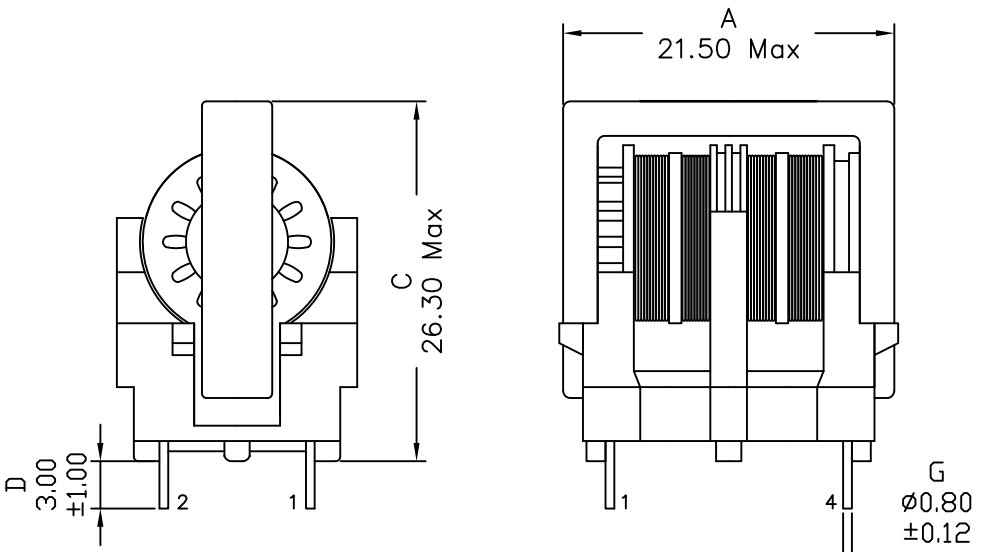

Bottom view

Marking on top:

XF0274-ET20 YYWW

2. Schematic:

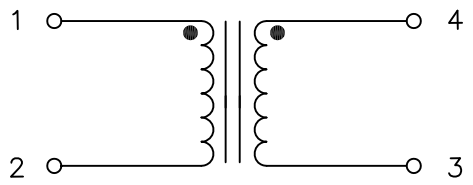

3. Electrical Specifications: @25°C

OCL: 2.7mH Min @1KHz, 0.1V Each Wdg

Q: Pins 1-2 5 Min @1KHz, 0.1V

LL: Pins 1-2 46uH Max @100KHz, 0.1V (Short 4+3)

DCR: 0.110 Ohms ±20%, Each Wdg

Turns Ratio: (1-2):(4-3)=1:1±2%

Rated Voltage: 250Vac/dc

Isolation Voltage: 1500Vac Wdg to Wdg

SRF: Pins 1-2 500KHz Min

Notes:

1. Solderability: Leads shall meet MIL-STD-202G, Method 208H for solderability.
2. Flammability: UL94V-0
3. ASTM oxygen index: > 28%
4. Insulation System: Class F 155°C. UL file E151556
5. Operating Temperature Range: All listed parameters are to be within tolerance from -40°C to +115°C
6. Storage Temperature Range: -55°C to +125°C
7. Aqueous wash compatible
8. Electrical and mechanical specifications 100% tested
9. RoHS Compliant Component

XFMRS Inc www.XFMRS.com	Title: LINE FILTER		
UNLESS OTHERWISE SPECIFIED TOLERANCES: .xx ±0.30 Dimensions in MM	P/N: XF0274-ET20		REV. A
	DWN.	Xiang	Mar-08-16
	CHK.	YK Liao	Mar-08-16
SHEET 1 OF 2	APP.	DDC	Mar-08-16

DOC. REV: A/1

PROPRIETARY Document is the property of XFMRS Group & is not allowed to be duplicated without authorization.

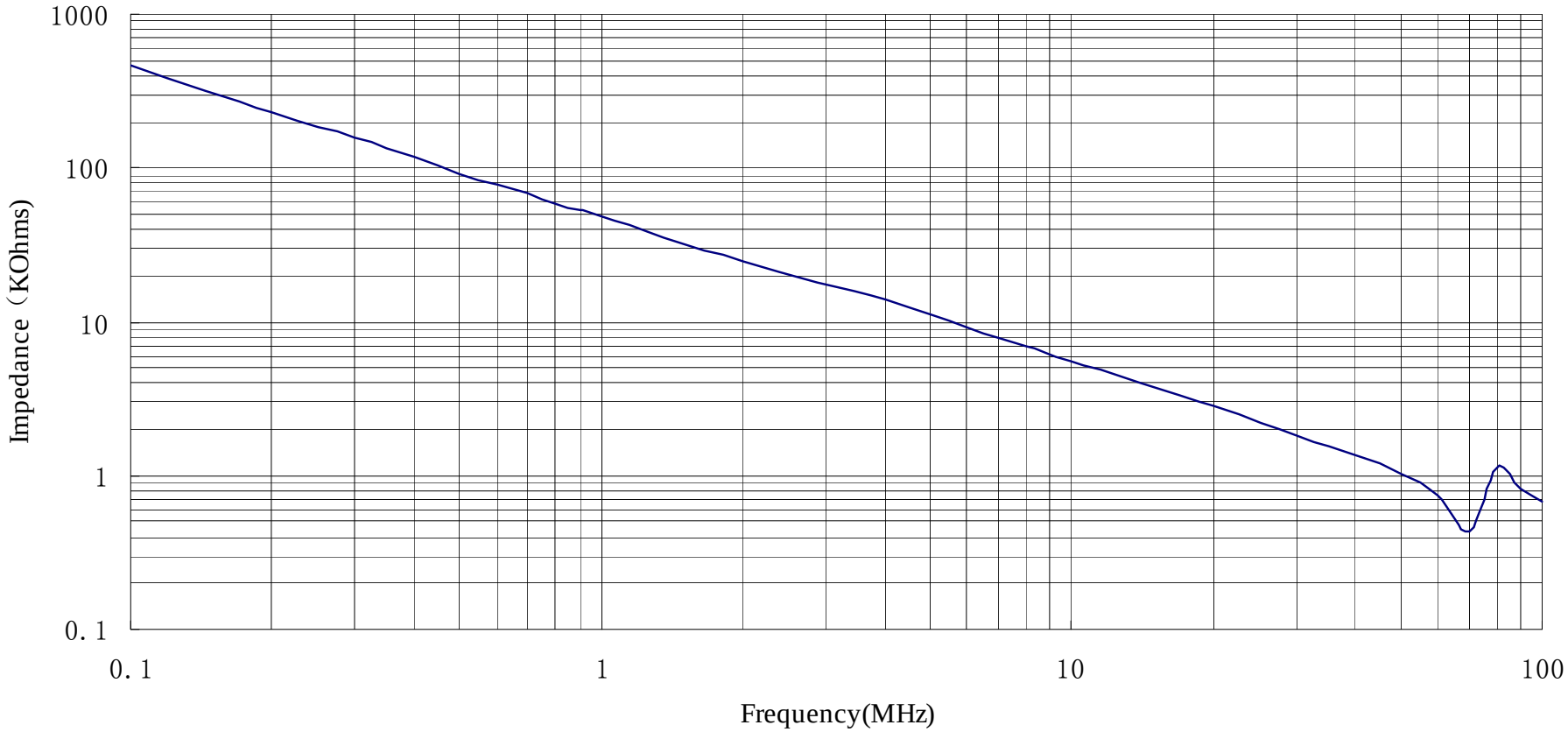

DOC. REV: A/1

PROPRIETARY Document is the property of XFMRS Group & is not allowed to be duplicated without authorization.

XFMRS Inc www.XFMRS.com	Title: LINE FILTER		
UNLESS OTHERWISE SPECIFIED TOLERANCES: .xx ±0.30 Dimensions in MM	P/N: XF0274-ET20		REV. A
	DWN.	Xiang	Mar-08-16
	CHK.	YK Liao	Mar-08-16
SHEET 2 OF 2	APP.	DDC	Mar-08-16