16-Bit

Architecture

XE161FU

16-Bit Single-Chip
Real Time Signal Controller
XE166 Family / Compact Line

Data Sheet

V1.2 2012-07

Microcontrollers

Edition 2012-07

Published by
Infineon Technologies AG
81726 Munich, Germany

© 2012 Infineon Technologies AG
All Rights Reserved.

Legal Disclaimer

The information given in this document shall in no event be regarded as a guarantee of conditions or characteristics. With respect to any examples or hints given herein, any typical values stated herein and/or any information regarding the application of the device, Infineon Technologies hereby disclaims any and all warranties and liabilities of any kind, including without limitation, warranties of non-infringement of intellectual property rights of any third party.

Information

For further information on technology, delivery terms and conditions and prices, please contact the nearest Infineon Technologies Office (**www.infineon.com**).

Warnings

Due to technical requirements, components may contain dangerous substances. For information on the types in question, please contact the nearest Infineon Technologies Office.

Infineon Technologies components may be used in life-support devices or systems only with the express written approval of Infineon Technologies, if a failure of such components can reasonably be expected to cause the failure of that life-support device or system or to affect the safety or effectiveness of that device or system. Life support devices or systems are intended to be implanted in the human body or to support and/or maintain and sustain and/or protect human life. If they fail, it is reasonable to assume that the health of the user or other persons may be endangered.

16-Bit

Architecture

XE161FU

16-Bit Single-Chip
Real Time Signal Controller
XE166 Family / Compact Line

Data Sheet

V1.2 2012-07

Microcontrollers

XE161FU Data Sheet

Revision History: V1.2 2012-07

Previous Versions: V1.0 2010-12, V1.1 2011-09	
Page	Subjects (major changes since last revision)
48, 49	The value of absolute sum of overload currents parameter in absolute maximum rating parameter and operating conditions tables are switched.
70	Table description on coding of bit field LEVxV is updated.

Trademarks

C166™, TriCore™ and DAVE™ are trademarks of Infineon Technologies AG.

We Listen to Your Comments
Is there any information in this document that you feel is wrong, unclear or missing?
Your feedback will help us to continuously improve the quality of this document.
Please send your proposal (including a reference to this document) to:
mcdocu.comments@infineon.com



Table of Contents

1 Summary of Features . . . 3
1.1 Device Types . . . 5
1.2 Definition of Feature Variants . . . 6

2 General Device Information . . . 7
2.1 Pin Configuration and Definition . . . 8
2.2 Identification Registers . . . 18

3 Functional Description . . . 19
3.1 Memory Subsystem and Organization . . . 20
3.2 Central Processing Unit (CPU) . . . 23
3.3 Memory Protection Unit (MPU) . . . 25
3.4 Memory Checker Module (MCHK) . . . 25
3.5 Interrupt System . . . 26
3.6 On-Chip Debug Support (OCDS) . . . 27
3.7 Capture/Compare Unit (CC2) . . . 28
3.8 Capture/Compare Units CCU6x . . . 31
3.9 General Purpose Timer (GPT12E) Unit . . . 33
3.10 Real Time Clock . . . 37
3.11 A/D Converters . . . 39
3.12 Universal Serial Interface Channel Modules (USIC) . . . 40
3.13 System Timer . . . 41
3.14 Window Watchdog Timer . . . 41
3.15 Clock Generation . . . 42
3.16 Parallel Ports . . . 43
3.17 Power Management . . . 44
3.18 Instruction Set Summary . . . 45

4 Electrical Parameters . . . 48
4.1 General Parameters . . . 48
4.1.1 Operating Conditions . . . 49
4.2 Voltage Range definitions . . . 51
4.2.1 Parameter Interpretation . . . 51
4.3 DC Parameters . . . 52
4.3.1 DC Parameters for Upper Voltage Area . . . 54
4.3.2 DC Parameters for Lower Voltage Area . . . 56
4.3.3 Power Consumption . . . 58
4.4 Analog/Digital Converter Parameters . . . 62
4.5 System Parameters . . . 68
4.6 Flash Memory Parameters . . . 71
4.7 AC Parameters . . . 73
4.7.1 Testing Waveforms . . . 73

4.7.2 Definition of Internal Timing 74
4.7.2.1 Phase Locked Loop (PLL) 75
4.7.2.2 Wakeup Clock 78
4.7.2.3 Selecting and Changing the Operating Frequency 78
4.7.3 External Clock Input Parameters 79
4.7.4 Pad Properties 81
4.7.5 Synchronous Serial Interface Timing 84
4.7.6 Debug Interface Timing 88

5 Package and Reliability 95
5.1 Packaging 95
5.2 Thermal Considerations 97
5.3 Quality Declarations 98

16-Bit Single-Chip
Real Time Signal Controller
XE161FU (XE166 Family)

1 Summary of Features

For a quick overview and easy reference, the features of the XE161FU are summarized here.

- High-performance CPU with five-stage pipeline and MPU
  - 15.2 ns instruction cycle @ 66 MHz CPU clock (single-cycle execution)
  - One-cycle 32-bit addition and subtraction with 40-bit result
  - One-cycle multiplication (16 × 16 bit)
  - Background division (32 / 16 bit) in 21 cycles
  - One-cycle multiply-and-accumulate (MAC) instructions
  - Enhanced Boolean bit manipulation facilities
  - Zero-cycle jump execution
  - Additional instructions to support HLL and operating systems
  - Register-based design with multiple variable register banks
  - Fast context switching support with two additional local register banks
  - 16 Mbytes total linear address space for code and data
  - 1,024 Bytes on-chip special function register area (C166 Family compatible)
  - Integrated Memory Protection Unit (MPU)
- Interrupt system with 16 priority levels providing 46 interrupt nodes
  - Selectable external inputs for interrupt generation and wake-up
  - Fastest sample-rate 15.2 ns
- Eight-channel interrupt-driven single-cycle data transfer with Peripheral Event Controller (PEC), 24-bit pointers cover total address space
- Clock generation from internal or external clock sources, using on-chip PLL or prescaler
- Hardware CRC-Checker with Programmable Polynomial to Supervise On-Chip Memory Areas
- On-chip memory modules
  - 2 Kbytes on-chip dual-port RAM (DPRAM)
  - 2 Kbytes on-chip data SRAM (DSRAM)
  - 4 Kbytes on-chip program/data SRAM (PSRAM)
  - Up to 64 Kbytes on-chip program memory (Flash memory)
  - Memory content protection through Error Correction Code (ECC) for Flash memory and through parity for RAMs

- On-Chip Peripheral Modules
  - Synchronizable 12-bit A/D Converter with up to 10 channels, conversion time below 1 µs, optional data preprocessing (data reduction, range check), broken wire detection
  - 16-channel general purpose capture/compare unit (CC2)
  - Capture/compare unit for flexible PWM signal generation (CCU60)
  - Multi-functional general purpose timer unit with 5 timers
  - Up to 2 serial interface channels to be used as UART, LIN, high-speed synchronous channel (SPI/QSPI), IIC bus interface (10-bit addressing, 400 kbit/s), IIS interface
  - On-chip system timer and on-chip real time clock
- Single power supply from 3.0 V to 5.5 V
- Power reduction and wake-up modes with flexible power management
- Programmable window watchdog timer and oscillator watchdog
- Up to 33 general purpose I/O lines
- On-chip bootstrap loaders
- Supported by a full range of development tools including C compilers, macro-assembler packages, emulators, evaluation boards, HLL debuggers, simulators, logic analyzer disassemblers, programming boards
- On-chip debug support via Device Access Port (DAP), Single-Pin DAP (SPD) or JTAG interface
- 48-pin Green VQFN package, 0.5 mm (10.7 mil) pitch

Ordering Information

The ordering code for an Infineon microcontroller provides an exact reference to a specific product. This ordering code identifies:

- the function set of the corresponding product type
- the temperature range[1]:
  - SAF-…: -40°C to 85°C
  - SAK-…: -40°C to 125°C
- the package and the type of delivery.

For ordering codes for the XE161FU please contact your sales representative or local distributor.

1) Not all derivatives are offered in all temperature ranges.

1.1 Device Types

The following XE161FU device types are available and can be ordered through Infineon's direct and/or distribution channels.

Table 1 Synopsis of XE161FU Device Types

Derivative[1]	Flash Memory[2]	PSRAM DSRAM[3]	Capt./Comp. Modules	ADC[4] Chan.	Interfaces[4]
XE161FU-4FxV	32 Kbytes	4 Kbytes 2 Kbytes	CC2 CCU60	10	2 Serial Chan.
XE161FU-8FxV	64 Kbytes	4 Kbytes 2 Kbytes	CC2 CCU60	10	2 Serial Chan.

1) x is a placeholder for available speed grade in MHz. Can be 40 or 66.
2) Specific information about the on-chip Flash memory in **Table 3**.
3) All derivatives additionally provide 2 Kbytes DPRAM.
4) Specific information about the available channels in **Table 5**.

1.2 Definition of Feature Variants

The XE161FU types are offered with several Flash memory sizes. **Table 3** and **Table 4** describe the location of the available Flash memory.

Table 3 Continuous Flash Memory Ranges

Total Flash Size	1st Range[1)]	2nd Range	3rd Range
64 Kbytes	$C0'0000_H$ … $C0'EFFF_H$	$C1'0000_H$ … $C1'0FFF_H$	n.a.
32 Kbytes	$C0'0000_H$ … $C0'7FFF_H$	n.a.	n.a.

1) The uppermost 4-Kbyte sector of the first Flash segment is reserved for internal use ($C0'F000_H$ to $C0'FFFF_H$).

Table 4 Flash Memory Module Allocation (in Kbytes)

Total Flash Size	Flash 0[1)]	Flash 1
64	64	n.a.
32	32	n.a.

1) The uppermost 4-Kbyte sector of the first Flash segment is reserved for internal use ($C0'F000_H$ to $C0'FFFF_H$).

The XE161FU types are offered with different interface options. **Table 5** lists the available channels for each option.

Table 5 Interface Channel Association

Total Number	Available Channels / Message Objects
10 ADC0 channels	CH0, CH2, CH3, CH4, CH8, CH9, CH16, CH17, CH19, CH20
2 serial channels	U0C0, U0C1

2 General Device Information

The XE161FU series (16-Bit Single-Chip
Real Time Signal Controller) is a part of the Infineon XE166 Family of full-feature single-chip CMOS microcontrollers. These devices extend the functionality and performance of the C166 Family in terms of instructions (MAC unit), peripherals, and speed. They combine high CPU performance (up to 66 million instructions per second) with extended peripheral functionality and enhanced IO capabilities. Optimized peripherals can be adapted flexibly to meet the application requirements. These derivatives utilize clock generation via PLL and internal or external clock sources. On-chip memory modules include program Flash, program RAM, and data RAM.

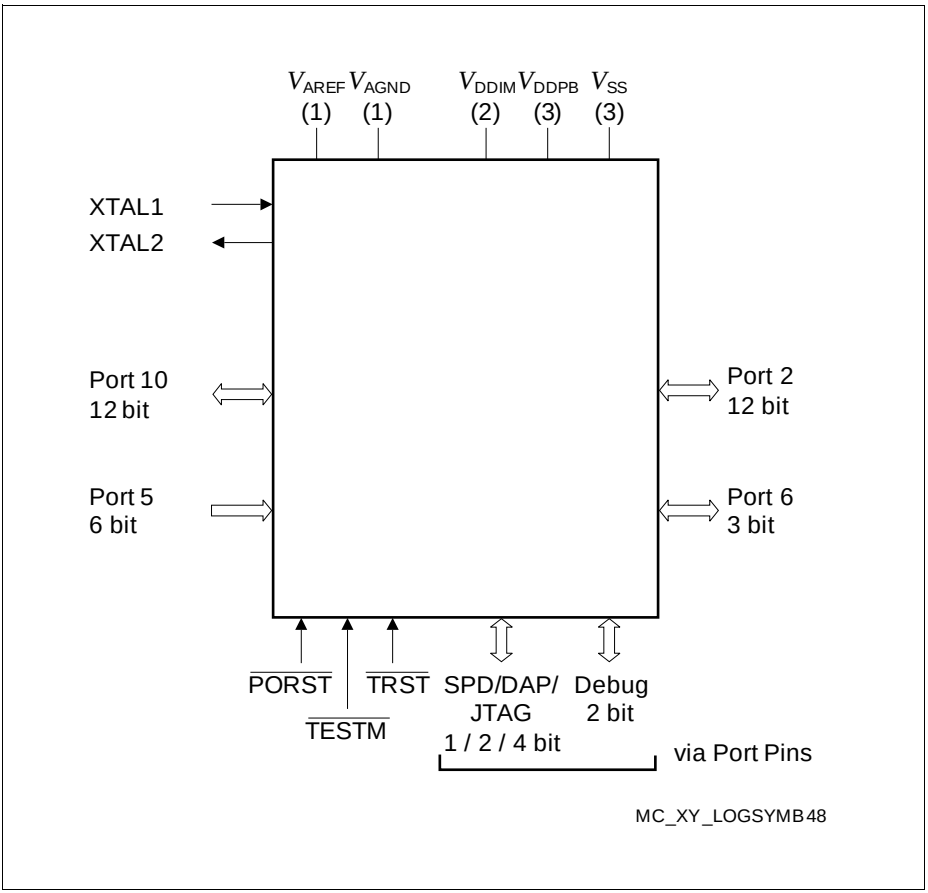

Figure 1 XE161FU Logic Symbol

2.1 Pin Configuration and Definition

The pins of the XE161FU are described in detail in **Table 6**, which includes all alternate functions. For further explanations please refer to the footnotes at the end of the table. The following figure summarizes all pins, showing their locations on the four sides of the package.

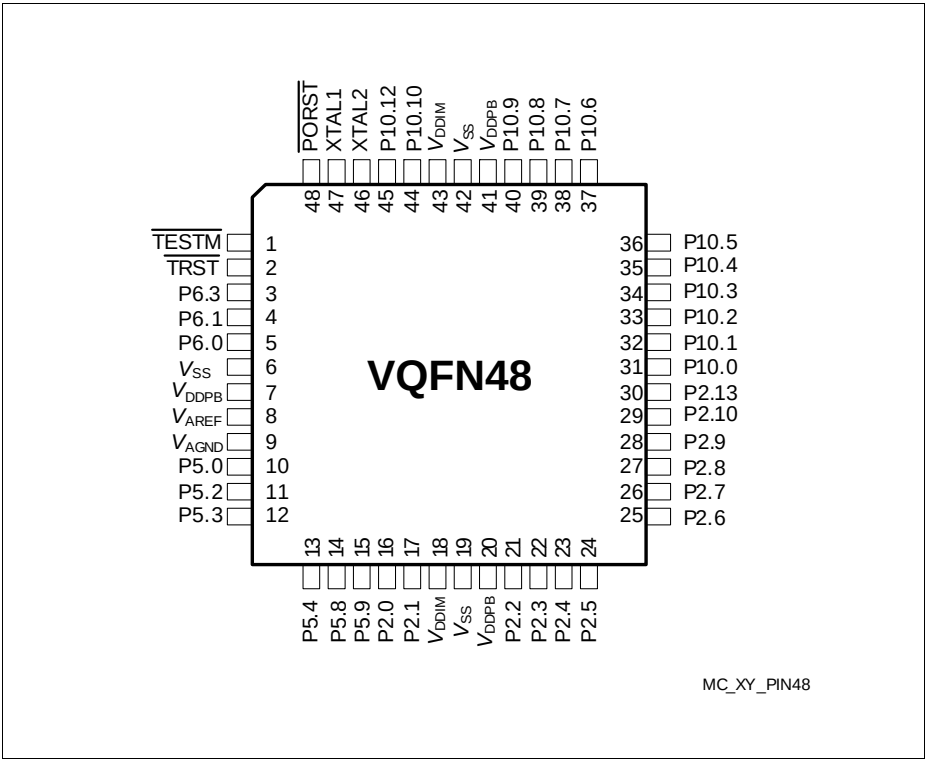

Figure 2 XE161FU Pin Configuration (top view)

Key to Pin Definitions

- **Ctrl.**: The output signal for a port pin is selected by bit field PC in the associated register Px_IOCRy. Output O0 is selected by setting the respective bit field PC to $1x00_B$, output O1 is selected by $1x01_B$, etc.
  Output signal OH is controlled by hardware.
- **Type**: Indicates the pad type and its power supply domain (B, M).
  - St: Standard pad
  - Sp: Special pad e.g. XTALx
  - DA: Digital IO and analog input
  - In: Input only pad
  - PS: Power supply pad

Table 6 Pin Definitions and Functions

Pin	Symbol	Ctrl.	Type	Function
1	$\overline{\text{TESTM}}$	I	In/B	**Testmode Enable** Enables factory test modes, must be held HIGH for normal operation (connect to V_{DDPB}). An internal pullup device will hold this pin high when nothing is driving it.
2	$\overline{\text{TRST}}$	I	In/B	**Test-System Reset Input** For normal system operation, pin $\overline{\text{TRST}}$ should be held low. A high level at this pin at the rising edge of $\overline{\text{PORST}}$ activates the XE161FU's debug system. In this case, pin $\overline{\text{TRST}}$ must be driven low once to reset the debug system. An internal pulldown device will hold this pin low when nothing is driving it.
3	P6.3	O0 / I	St/B	**Bit 3 of Port 6, General Purpose Input/Output**
	T3OUT	O2	St/B	**GPT12E Timer T3 Toggle Latch Output**
	ADC0_REQTRyF	I	St/B	**External Request Trigger Input for ADC0/1**
4	P6.1	O0 / I	DA/B	**Bit 1 of Port 6, General Purpose Input/Output**
	ADC0_CH17	I	DA/B	**Analog Input Channel 17 for ADC0**
	EMUX1	O1	DA/B	**External Analog MUX Control Output 1 (ADC0)**
	T3OUT	O2	DA/B	**GPT12E Timer T3 Toggle Latch Output**
	ADC0_REQTRyE	I	DA/B	**External Request Trigger Input for ADC0**
	ESR1_6	I	DA/B	**ESR1 Trigger Input 6**

Table 6 Pin Definitions and Functions (cont'd)

Pin	Symbol	Ctrl.	Type	Function
5	P6.0	O0 / I	DA/B	**Bit 0 of Port 6, General Purpose Input/Output**
	ADC0_CH16	I	DA/B	**Analog Input Channel 16 for ADC0**
	EMUX0	O1	DA/B	**External Analog MUX Control Output 0 (ADC0)**
	$\overline{\text{BRKOUT}}$	O3	DA/B	**OCDS Break Signal Output**
	ADC0_REQGTyG	I	DA/B	**External Request Gate Input for ADC0**
10	P5.0	I	In/B	**Bit 0 of Port 5, General Purpose Input**
	ADC0_CH0	I	In/B	**Analog Input Channel 0 for ADC0**
11	P5.2	I	In/B	**Bit 2 of Port 5, General Purpose Input**
	ADC0_CH2	I	In/B	**Analog Input Channel 2 for ADC0**
	TDI_A	I	In/B	**JTAG Test Data Input**
12	P5.3	I	In/B	**Bit 3 of Port 5, General Purpose Input**
	ADC0_CH3	I	In/B	**Analog Input Channel 3 for ADC0**
	T3INA	I	In/B	**GPT12E Timer T3 Count/Gate Input**
13	P5.4	I	In/B	**Bit 4 of Port 5, General Purpose Input**
	ADC0_CH4	I	In/B	**Analog Input Channel 4 for ADC0**
	T3EUDA	I	In/B	**GPT12E Timer T3 External Up/Down Control Input**
	TMS_A	I	In/B	**JTAG Test Mode Selection Input**
14	P5.8	I	In/B	**Bit 8 of Port 5, General Purpose Input**
	ADC0_CH8	I	In/B	**Analog Input Channel 8 for ADC0**
	CCU60_T12HRC	I	In/B	**External Run Control Input for T12 of CCU60**
	CCU60_T13HRC	I	In/B	**External Run Control Input for T13 of CCU60**
15	P5.9	I	In/B	**Bit 9 of Port 5, General Purpose Input**
	ADC0_CH9	I	In/B	**Analog Input Channel 9 for ADC0**
	CC2_T7IN	I	In/B	**CAPCOM2 Timer T7 Count Input**
16	P2.0	O0 / I	DA/B	**Bit 0 of Port 2, General Purpose Input/Output**
	ADC0_CH19	I	DA/B	**Analog Input Channel 19 for ADC0**
	T5INB	I	DA/B	**GPT12E Timer T5 Count/Gate Input**

Table 6 Pin Definitions and Functions (cont'd)

Pin	Symbol	Ctrl.	Type	Function
17	P2.1	O0 / I	DA/B	**Bit 1 of Port 2, General Purpose Input/Output**
	ADC0_CH20	I	DA/B	**Analog Input Channel 20 for ADC0**
	T5EUDB	I	DA/B	**GPT12E Timer T5 External Up/Down Control Input**
	ESR1_5	I	DA/B	**ESR1 Trigger Input 5**
	ERU_0A0	I	DA/B	**External Request Unit Channel 0 Input A0**
21	P2.2	O0 / I	St/B	**Bit 2 of Port 2, General Purpose Input/Output**
	ESR2_5	I	St/B	**ESR2 Trigger Input 5**
	ERU_1A0	I	St/B	**External Request Unit Channel 1 Input A0**
22	P2.3	O0 / I	St/B	**Bit 3 of Port 2, General Purpose Input/Output**
	U0C0_DOUT	O1	St/B	**USIC0 Channel 0 Shift Data Output**
	CC2_CC16	O3 / I	St/B	**CAPCOM2 CC16IO Capture Inp./ Compare Out.**
	ESR2_0	I	St/B	**ESR2 Trigger Input 0**
	U0C0_DX0E	I	St/B	**USIC0 Channel 0 Shift Data Input**
	U0C1_DX0D	I	St/B	**USIC0 Channel 1 Shift Data Input**
23	P2.4	O0 / I	St/B	**Bit 4 of Port 2, General Purpose Input/Output**
	U0C1_DOUT	O1	St/B	**USIC0 Channel 1 Shift Data Output**
	CC2_CC17	O3 / I	St/B	**CAPCOM2 CC17IO Capture Inp./ Compare Out.**
	ESR1_0	I	St/B	**ESR1 Trigger Input 0**
	U0C0_DX0F	I	St/B	**USIC0 Channel 0 Shift Data Input**
24	P2.5	O0 / I	St/B	**Bit 5 of Port 2, General Purpose Input/Output**
	U0C0_SCLKOUT	O1	St/B	**USIC0 Channel 0 Shift Clock Output**
	CC2_CC18	O3 / I	St/B	**CAPCOM2 CC18IO Capture Inp./ Compare Out.**
	U0C0_DX1D	I	St/B	**USIC0 Channel 0 Shift Clock Input**
	ESR1_10	I	St/B	**ESR1 Trigger Input 10**

Table 6 Pin Definitions and Functions (cont'd)

Pin	Symbol	Ctrl.	Type	Function
25	P2.6	O0 / I	St/B	**Bit 6 of Port 2, General Purpose Input/Output**
	U0C0_SELO 0	O1	St/B	**USIC0 Channel 0 Select/Control 0 Output**
	U0C1_SELO 1	O2	St/B	**USIC0 Channel 1 Select/Control 1 Output**
	CC2_CC19	O3 / I	St/B	**CAPCOM2 CC19IO Capture Inp./ Compare Out.**
	CLKIN1	I	St/B	**Clock Signal Input 1**
	U0C0_DX2D	I	St/B	**USIC0 Channel 0 Shift Control Input**
	ESR2_6	I	St/B	**ESR2 Trigger Input 6**
26	P2.7	O0 / I	St/B	**Bit 7 of Port 2, General Purpose Input/Output**
	U0C1_SELO 0	O1	St/B	**USIC0 Channel 1 Select/Control 0 Output**
	U0C0_SELO 1	O2	St/B	**USIC0 Channel 0 Select/Control 1 Output**
	CC2_CC20	O3 / I	St/B	**CAPCOM2 CC20IO Capture Inp./ Compare Out.**
	U0C1_DX2C	I	St/B	**USIC0 Channel 1 Shift Control Input**
	ESR2_7	I	St/B	**ESR2 Trigger Input 7**
27	P2.8	O0 / I	St/B	**Bit 8 of Port 2, General Purpose Input/Output**
	U0C1_SCLK OUT	O1	St/B	**USIC0 Channel 1 Shift Clock Output**
	EXTCLK	O2	St/B	**Programmable Clock Signal Output**
	CC2_CC21	O3 / I	St/B	**CAPCOM2 CC21IO Capture Inp./ Compare Out.**
	U0C1_DX1D	I	St/B	**USIC0 Channel 1 Shift Clock Input**
28	P2.9	O0 / I	St/B	**Bit 9 of Port 2, General Purpose Input/Output**
	U0C1_DOUT	O1	St/B	**USIC0 Channel 1 Shift Data Output**
	CC2_CC22	O3 / I	St/B	**CAPCOM2 CC22IO Capture Inp./ Compare Out.**
	C1	I	St/B	**Configuration Pin 1**
	TCK_A	I	St/B	**DAP0/JTAG Clock Input**

Table 6 Pin Definitions and Functions (cont'd)

Pin	Symbol	Ctrl.	Type	Function
29	P2.10	O0 / I	St/B	**Bit 10 of Port 2, General Purpose Input/Output**
	U0C1_DOUT	O1	St/B	**USIC0 Channel 1 Shift Data Output**
	U0C0_SELO 3	O2	St/B	**USIC0 Channel 0 Select/Control 3 Output**
	CC2_CC23	O3 / I	St/B	**CAPCOM2 CC23IO Capture Inp./ Compare Out.**
	U0C1_DX0E	I	St/B	**USIC0 Channel 1 Shift Data Input**
	CAPINA	I	St/B	**GPT12E Register CAPREL Capture Input**
30,	P2.13	O0 / I	St/B	**Bit 13 of Port 2, General Purpose Input/Output**
31	P10.0	O0 / I	St/B	**Bit 0 of Port 10, General Purpose Input/Output**
	U0C1_DOUT	O1	St/B	**USIC0 Channel 1 Shift Data Output**
	CCU60_CC6 0	O2	St/B	**CCU60 Channel 0 Output**
	CCU60_CC6 0INA	I	St/B	**CCU60 Channel 0 Input**
	ESR1_2	I	St/B	**ESR1 Trigger Input 2**
	U0C0_DX0A	I	St/B	**USIC0 Channel 0 Shift Data Input**
	U0C1_DX0A	I	St/B	**USIC0 Channel 1 Shift Data Input**
32	P10.1	O0 / I	St/B	**Bit 1 of Port 10, General Purpose Input/Output**
	U0C0_DOUT	O1	St/B	**USIC0 Channel 0 Shift Data Output**
	CCU60_CC6 1	O2	St/B	**CCU60 Channel 1 Output**
	CCU60_CC6 1INA	I	St/B	**CCU60 Channel 1 Input**
	U0C0_DX0B	I	St/B	**USIC0 Channel 0 Shift Data Input**
	U0C0_DX1A	I	St/B	**USIC0 Channel 0 Shift Clock Input**

Table 6 Pin Definitions and Functions (cont'd)

Pin	Symbol	Ctrl.	Type	Function
33	P10.2	O0 / I	St/B	**Bit 2 of Port 10, General Purpose Input/Output**
	U0C0_SCLKOUT	O1	St/B	**USIC0 Channel 0 Shift Clock Output**
	CCU60_CC62	O2	St/B	**CCU60 Channel 2 Output**
	CCU60_CC62INA	I	St/B	**CCU60 Channel 2 Input**
	U0C0_DX1B	I	St/B	**USIC0 Channel 0 Shift Clock Input**
34	P10.3	O0 / I	St/B	**Bit 3 of Port 10, General Purpose Input/Output**
	CCU60_COUT60	O2	St/B	**CCU60 Channel 0 Output**
	U0C0_DX2A	I	St/B	**USIC0 Channel 0 Shift Control Input**
	U0C1_DX2A	I	St/B	**USIC0 Channel 1 Shift Control Input**
35	P10.4	O0 / I	St/B	**Bit 4 of Port 10, General Purpose Input/Output**
	U0C0_SELO3	O1	St/B	**USIC0 Channel 0 Select/Control 3 Output**
	CCU60_COUT61	O2	St/B	**CCU60 Channel 1 Output**
	U0C0_DX2B	I	St/B	**USIC0 Channel 0 Shift Control Input**
	U0C1_DX2B	I	St/B	**USIC0 Channel 1 Shift Control Input**
	ESR1_9	I	St/B	**ESR1 Trigger Input 9**
36	P10.5	O0 / I	St/B	**Bit 5 of Port 10, General Purpose Input/Output**
	U0C1_SCLKOUT	O1	St/B	**USIC0 Channel 1 Shift Clock Output**
	CCU60_COUT62	O2	St/B	**CCU60 Channel 2 Output**
	U0C1_DX1B	I	St/B	**USIC0 Channel 1 Shift Clock Input**
37	P10.6	O0 / I	St/B	**Bit 6 of Port 10, General Purpose Input/Output**
	U0C0_DOUT	O1	St/B	**USIC0 Channel 0 Shift Data Output**
	U0C0_DX0C	I	St/B	**USIC0 Channel 0 Shift Data Input**
	CCU60_CTRAPA	I	St/B	**CCU60 Emergency Trap Input**

Table 6 Pin Definitions and Functions (cont'd)

Pin	Symbol	Ctrl.	Type	Function
38	P10.7	O0 / I	St/B	**Bit 7 of Port 10, General Purpose Input/Output**
	U0C1_DOUT	O1	St/B	**USIC0 Channel 1 Shift Data Output**
	CCU60_COUT63	O2	St/B	**CCU60 Channel 3 Output**
	U0C1_DX0B	I	St/B	**USIC0 Channel 1 Shift Data Input**
	CCU60_CCPOS0A	I	St/B	**CCU60 Position Input 0**
	T4INB	I	St/B	**GPT12E Timer T4 Count/Gate Input**
39	P10.8	O0 / I	St/B	**Bit 8 of Port 10, General Purpose Input/Output**
	U0C0_MCLKOUT	O1	St/B	**USIC0 Channel 0 Master Clock Output**
	U0C1_SELO0	O2	St/B	**USIC0 Channel 1 Select/Control 0 Output**
	CCU60_CCPOS1A	I	St/B	**CCU60 Position Input 1**
	U0C0_DX1C	I	St/B	**USIC0 Channel 0 Shift Clock Input**
	$\overline{\text{BRKIN_B}}$	I	St/B	**OCDS Break Signal Input**
	T3EUDB	I	St/B	**GPT12E Timer T3 External Up/Down Control Input**
	ESR2_11	I	St/B	**ESR2 Trigger Input 11**
40	P10.9	O0 / I	St/B	**Bit 9 of Port 10, General Purpose Input/Output**
	U0C0_SELO4	O1	St/B	**USIC0 Channel 0 Select/Control 4 Output**
	U0C1_MCLKOUT	O2	St/B	**USIC0 Channel 1 Master Clock Output**
	CCU60_CCPOS2A	I	St/B	**CCU60 Position Input 2**
	TCK_B	I	St/B	**DAP0/JTAG Clock Input**
	T3INB	I	St/B	**GPT12E Timer T3 Count/Gate Input**

Table 6 Pin Definitions and Functions (cont'd)

Pin	Symbol	Ctrl.	Type	Function
44	P10.10	O0 / I	St/B	**Bit 10 of Port 10, General Purpose Input/Output**
	U0C0_SELO 0	O1	St/B	**USIC0 Channel 0 Select/Control 0 Output**
	CCU60_COU T63	O2	St/B	**CCU60 Channel 3 Output**
	U0C0_DX2C	I	St/B	**USIC0 Channel 0 Shift Control Input**
	TDI_B	I	St/B	**JTAG Test Data Input**
	U0C1_DX1A	I	St/B	**USIC0 Channel 1 Shift Clock Input**
45	P10.12	O0 / I	St/B	**Bit 12 of Port 10, General Purpose Input/Output**
	U0C0_DOUT	O2	St/B	**USIC0 Channel 0 Shift Data Output**
	TDO_A	OH	St/B	**DAP1/JTAG Test Data Output**
	SPD_0	I/OH	St/B	**SPD Input/Output**
	C0	I	St/B	**Configuration Pin 0**
	U0C0_DX0D	I	St/B	**USIC0 Channel 0 Shift Data Input**
46	XTAL2	O	Sp/M	**Crystal Oscillator Amplifier Output**
47	XTAL1	I	Sp/M	**Crystal Oscillator Amplifier Input** To clock the device from an external source, drive XTAL1, while leaving XTAL2 unconnected. Voltages on XTAL1 must comply to the core supply voltage V_{DDIM}.
	ESR2_9	I	St/B	**ESR2 Trigger Input 9**
48	$\overline{\text{PORST}}$	I	In/B	**Power On Reset Input** A low level at this pin resets the XE161FU completely. A spike filter suppresses input pulses <10 ns. Input pulses >100 ns safely pass the filter. The minimum duration for a safe recognition should be 120 ns. An internal pullup device will hold this pin high when nothing is driving it.
8	V_{AREF}	-	PS/B	**Reference Voltage for A/D Converters ADC0**
9	V_{AGND}	-	PS/B	**Reference Ground for A/D Converters ADC0**

Table 6 Pin Definitions and Functions (cont'd)

Pin	Symbol	Ctrl.	Type	Function
18, 43	V_{DDIM}	-	PS/M	**Digital Core Supply Voltage for Domain M** Decouple with a ceramic capacitor, see Data Sheet for details. All V_{DDIM} pins must be connected to each other.
7, 20, 41	V_{DDPB}	-	PS/B	**Digital Pad Supply Voltage for Domain B** Connect decoupling capacitors to adjacent V_{DDP}/V_{SS} pin pairs as close as possible to the pins.
6, 19, 42	V_{SS}	-	PS/--	**Digital Ground** All V_{SS} pins must be connected to the ground-line or ground-plane.

2.2 Identification Registers

The identification registers describe the current version of the XE161FU and of its modules.

Table 7 XE161FU Identification Registers

Short Name	Value	Address	Notes
SCU_IDMANUF	1820_H	$00'F07E_H$	
SCU_IDCHIP	5001_H	$00'F07C_H$	
SCU_IDMEM	3010_H	$00'F07A_H$	
SCU_IDPROG	1313_H	$00'F078_H$	
JTAG_ID	$001D'7083_H$	---	

3 Functional Description

The architecture of the XE161FU combines advantages of RISC, CISC, and DSP processors with an advanced peripheral subsystem in a well-balanced design. On-chip memory blocks allow the design of compact systems-on-silicon with maximum performance suited for computing, control, and communication.

The on-chip memory blocks (program code memory and SRAM, dual-port RAM, data SRAM) and the generic peripherals are connected to the CPU by separate high-speed buses. Another bus, the LXBus, connects additional on-chip resources and external resources (see **Figure 3**). This bus structure enhances overall system performance by enabling the concurrent operation of several subsystems of the XE161FU.

The block diagram gives an overview of the on-chip components and the advanced internal bus structure of the XE161FU.

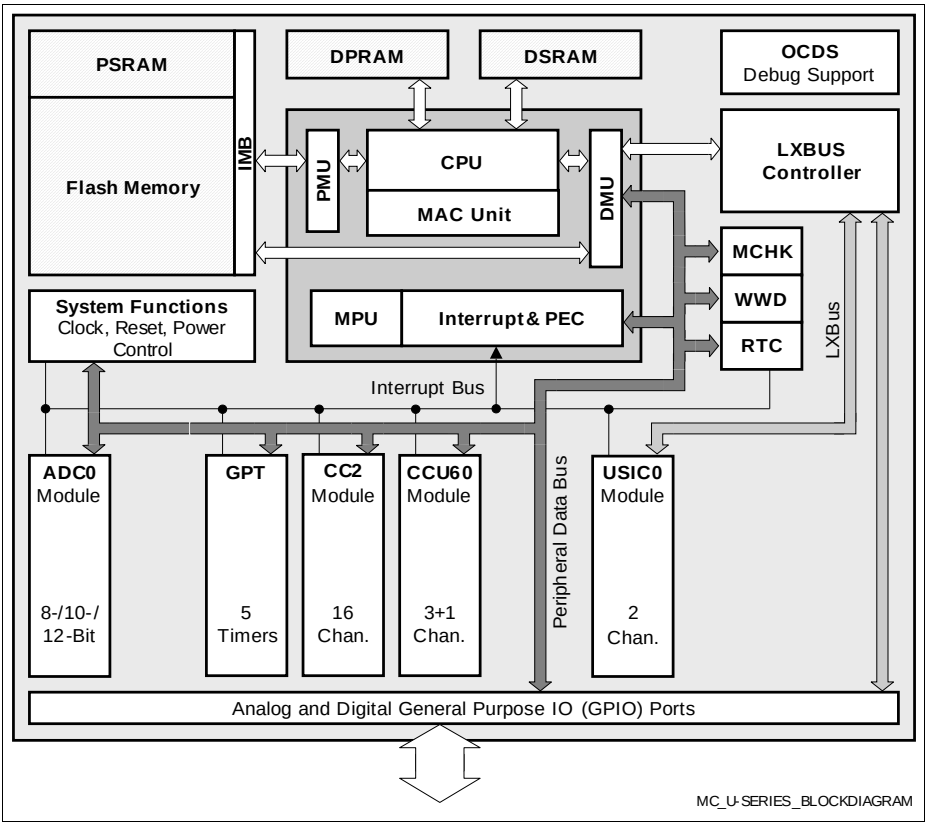

Figure 3 Block Diagram

3.1 Memory Subsystem and Organization

The memory space of the XE161FU is configured in the von Neumann architecture. In this architecture all internal and external resources, including code memory, data memory, registers and I/O ports, are organized in the same linear address space.

Table 8 XE161FU **Memory Map** [1)]

Address Area	Start Loc.	End Loc.	Area Size[2)]	Notes
IMB register space	FF'FF00$_H$	FF'FFFF$_H$	256 bytes	
Reserved	F0'0000$_H$	FF'FEFF$_H$	< 1 Mbyte	Minus IMB registers.
Reserved for EPSRAM	E8'1000$_H$	EF'FFFF$_H$	508 Kbytes	Mirrors EPSRAM
Emulated PSRAM	E8'0000$_H$	E8'0FFF$_H$	up to 4 Kbytes	With Flash timing.
Reserved for PSRAM	E0'1000$_H$	E7'FFFF$_H$	508 Kbytes	Mirrors PSRAM
PSRAM	E0'0000$_H$	E0'0FFF$_H$	up to 4 Kbytes	Program SRAM.
Reserved for Flash	C1'1000$_H$	DF'FFFF$_H$	1980 Kbytes	
Flash 0	C0'0000$_H$	C1'0FFF$_H$	68 Kbytes[3)]	
External memory area	40'0000$_H$	BF'FFFF$_H$	8 Mbytes	
External IO area[4)]	21'0000$_H$	3F'FFFF$_H$	1984 Kbytes	
Reserved	20'B400$_H$	20'FFFF$_H$	19 Kbytes	
USIC0 alternate regs.	20'B000$_H$	20'B3FF$_H$	1 Kbytes	Accessed via LXBus controller
Reserved	20'4800$_H$	20'AFFF$_H$	26 Kbytes	
USIC0 registers	20'4000$_H$	20'47FF$_H$	2 Kbytes	Accessed via LXBus controller
Reserved	20'0000$_H$	20'3FFF$_H$	16 Kbytes	
External memory area	01'0000$_H$	1F'FFFF$_H$	1984 Kbytes	
SFR area	00'FE00$_H$	00'FFFF$_H$	0.5 Kbytes	
Dual-port RAM (DPRAM)	00'F600$_H$	00'FDFF$_H$	2 Kbytes	
Reserved for DPRAM	00'F200$_H$	00'F5FF$_H$	1 Kbytes	
ESFR area	00'F000$_H$	00'F1FF$_H$	0.5 Kbytes	
XSFR area	00'E000$_H$	00'EFFF$_H$	4 Kbytes	
Data SRAM (DSRAM)	00'D800$_H$	00'DFFF$_H$	2 Kbytes	

Table 8 XE161FU **Memory Map** (cont'd)[1] (cont'd)

Address Area	Start Loc.	End Loc.	Area Size[2]	Notes
Reserved for DSRAM	$00'8000_H$	$00'D7FF_H$	22 Kbytes	
External memory area	$00'0000_H$	$00'7FFF_H$	32 Kbytes	

1) Accesses to the shaded areas are reserved. In devices with external bus interface these accesses generate external bus accesses.

2) The areas marked with "<" are slightly smaller than indicated, see column "Notes".

3) The uppermost 4-Kbyte sector of the first Flash segment is reserved for internal use ($C0'F000_H$ to $C0'FFFF_H$).

4) Several pipeline optimizations are not active within the external IO area.

This common memory space consists of 16 Mbytes organized as 256 segments of 64 Kbytes; each segment contains four data pages of 16 Kbytes. The entire memory space can be accessed bytewise or wordwise. Portions of the on-chip DPRAM and the register spaces (ESFR/SFR) additionally are directly bit addressable.

The internal data memory areas and the Special Function Register areas (SFR and ESFR) are mapped into segment 0, the system segment.

The Program Management Unit (PMU) handles all code fetches and, therefore, controls access to the program memories such as Flash memory and PSRAM.

The Data Management Unit (DMU) handles all data transfers and, therefore, controls access to the DSRAM and the on-chip peripherals.

Both units (PMU and DMU) are connected to the high-speed system bus so that they can exchange data. This is required if operands are read from program memory, code or data is written to the PSRAM, code is fetched from external memory, or data is read from or written to external resources. These include peripherals on the LXBus such as USIC or MultiCAN. The system bus allows concurrent two-way communication for maximum transfer performance.

4 Kbytes of on-chip Program SRAM (PSRAM) are provided to store user code or data. The PSRAM is accessed via the PMU and is optimized for code fetches. A section of the PSRAM with programmable size can be write-protected.

2 Kbytes of on-chip Data SRAM (DSRAM) are used for storage of general user data. The DSRAM is accessed via a separate interface and is optimized for data access.

2 Kbytes of on-chip Dual-Port RAM (DPRAM) provide storage for user-defined variables, for the system stack, and for general purpose register banks. A register bank can consist of up to 16 word-wide (R0 to R15) and/or byte-wide (RL0, RH0, …, RL7, RH7) General Purpose Registers (GPRs).
The upper 256 bytes of the DPRAM are directly bit addressable. When used by a GPR, any location in the DPRAM is bit addressable.

1024 bytes (2 × 512 bytes) of the address space are reserved for the Special Function Register areas (SFR space and ESFR space). SFRs are word-wide registers which are used to control and monitor functions of the different on-chip units. Unused SFR addresses are reserved for future members of the XE166 Family. In order to ensure upward compatibility they should either not be accessed or written with zeros.

The on-chip Flash memory stores code, constant data, and control data. The on-chip Flash memory consist of 1 module of 64 Kbytes. Each module is organized in 4-Kbyte sectors.
The uppermost 4-Kbyte sector of segment 0 (located in Flash module 0) is used internally to store operation control parameters and protection information.

Each sector can be separately write protected[1)], erased and programmed (in blocks of 128 Bytes). The complete Flash area can be read-protected. A user-defined password sequence temporarily unlocks protected areas. The Flash modules combine 128-bit read access with protected and efficient writing algorithms for programming and erasing. Dynamic error correction provides extremely high read data security for all read access operations. Access to different Flash modules can be executed in parallel.
For Flash parameters, please see **Section 4.6**.

Memory Content Protection

The contents of on-chip memories can be protected against soft errors (induced e.g. by radiation) by activating the parity mechanism or the Error Correction Code (ECC).
The parity mechanism can detect a single-bit error and prevent the software from using incorrect data or executing incorrect instructions.
The ECC mechanism can detect and automatically correct single-bit errors. This supports the stable operation of the system.

It is strongly recommended to activate the ECC mechanism wherever possible because this dramatically increases the robustness of an application against such soft errors.

1) To save control bits, sectors are clustered for protection purposes, they remain separate for programming/erasing.

3.2 Central Processing Unit (CPU)

The core of the CPU consists of a 5-stage execution pipeline with a 2-stage instruction-fetch pipeline, a 16-bit arithmetic and logic unit (ALU), a 32-bit/40-bit multiply and accumulate unit (MAC), a register-file providing three register banks, and dedicated SFRs. The ALU features a multiply-and-divide unit, a bit-mask generator, and a barrel shifter.

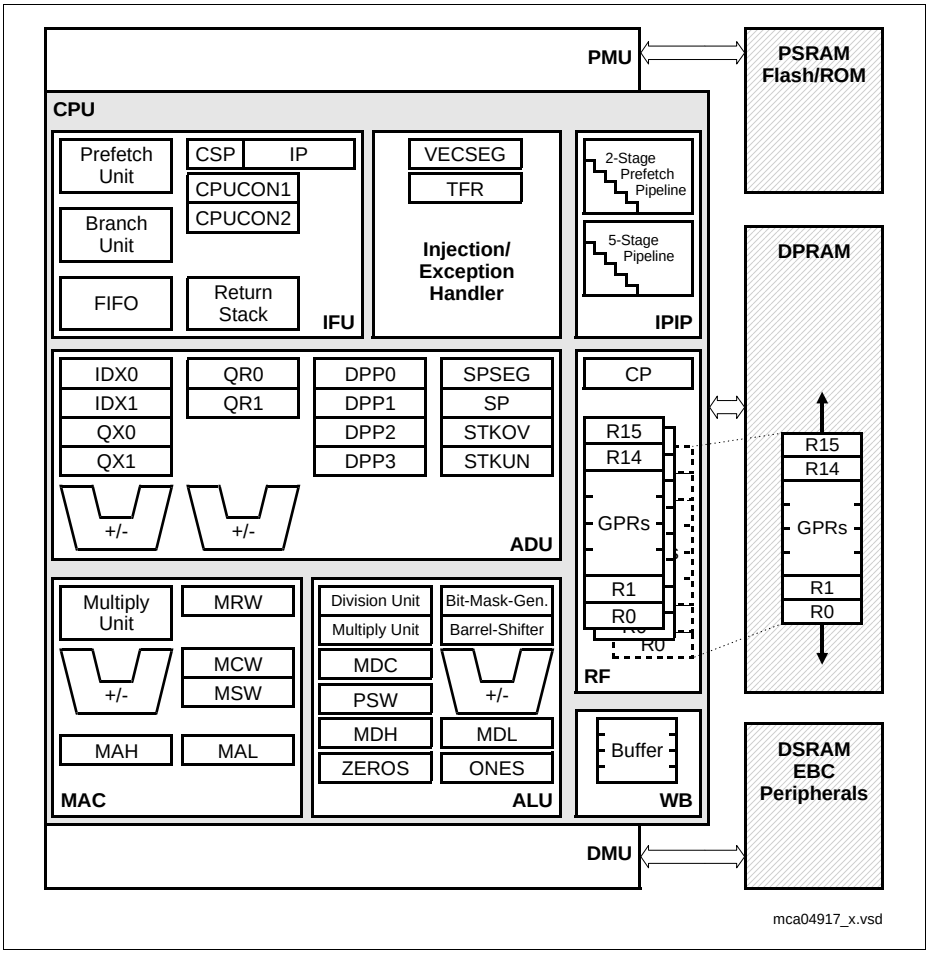

Figure 4 CPU Block Diagram

With this hardware most XE161FU instructions are executed in a single machine cycle of 15.2 ns @ 66-MHz CPU clock. For example, shift and rotate instructions are always processed during one machine cycle, no matter how many bits are shifted. Also, multiplication and most MAC instructions execute in one cycle. All multiple-cycle instructions have been optimized so that they can be executed very fast; for example, a 32-/16-bit division is started within 4 cycles while the remaining cycles are executed in the background. Another pipeline optimization, the branch target prediction, eliminates the execution time of branch instructions if the prediction was correct.

The CPU has a register context consisting of up to three register banks with 16 word-wide GPRs each at its disposal. One of these register banks is physically allocated within the on-chip DPRAM area. A Context Pointer (CP) register determines the base address of the active register bank accessed by the CPU at any time. The number of these register bank copies is only restricted by the available internal RAM space. For easy parameter passing, a register bank may overlap others.

A system stack of up to 32 Kwords is provided for storage of temporary data. The system stack can be allocated to any location within the address space (preferably in the on-chip RAM area); it is accessed by the CPU with the stack pointer (SP) register. Two separate SFRs, STKOV and STKUN, are implicitly compared with the stack pointer value during each stack access to detect stack overflow or underflow.

The high performance of the CPU hardware implementation can be best utilized by the programmer with the highly efficient XE161FU instruction set. This includes the following instruction classes:

- Standard Arithmetic Instructions
- DSP-Oriented Arithmetic Instructions
- Logical Instructions
- Boolean Bit Manipulation Instructions
- Compare and Loop Control Instructions
- Shift and Rotate Instructions
- Prioritize Instruction
- Data Movement Instructions
- System Stack Instructions
- Jump and Call Instructions
- Return Instructions
- System Control Instructions
- Miscellaneous Instructions

The basic instruction length is either 2 or 4 bytes. Possible operand types are bits, bytes and words. A variety of direct, indirect or immediate addressing modes are provided to specify the required operands.

3.3 Memory Protection Unit (MPU)

The XE161FU's Memory Protection Unit (MPU) protects user-specified memory areas from unauthorized read, write, or instruction fetch accesses. The MPU can protect the whole address space including the peripheral area. This completes established mechanisms such as the register security mechanism or stack overrun/underrun detection.

Four Protection Levels support flexible system programming where operating system, low level drivers, and applications run on separate levels. Each protection level permits different access restrictions for instructions and/or data.

Every access is checked (if the MPU is enabled) and an access violating the permission rules will be marked as invalid and leads to a protection trap.

A set of protection registers for each protection level specifies the address ranges and the access permissions. Applications requiring more than 4 protection levels can dynamically re-program the protection registers.

3.4 Memory Checker Module (MCHK)

The XE161FU's Memory Checker Module calculates a checksum (fractional polynomial division) on a block of data, often called Cyclic Redundancy Code (CRC). It is based on a 32-bit linear feedback shift register and may, therefore, also be used to generate pseudo-random numbers.

The Memory Checker Module is a 16-bit parallel input signature compression circuitry which enables error detection within a block of data stored in memory, registers, or communicated e.g. via serial communication lines. It reduces the probability of error masking due to repeated error patterns by calculating the signature of blocks of data.

The polynomial used for operation is configurable, so most of the commonly used polynomials may be used. Also, the block size for generating a CRC result is configurable via a local counter. An interrupt may be generated if testing the current data block reveals an error.

An autonomous CRC compare circuitry is included to enable redundant error detection, e.g. to enable higher safety integrity levels.

The Memory Checker Module provides enhanced fault detection (beyond parity or ECC) for data and instructions in volatile and non volatile memories. This is especially important for the safety and reliability of embedded systems.

3.5 Interrupt System

The architecture of the XE161FU supports several mechanisms for fast and flexible response to service requests; these can be generated from various sources internal or external to the microcontroller. Any of these interrupt requests can be programmed to be serviced by the Interrupt Controller or by the Peripheral Event Controller (PEC).

Using a standard interrupt service the current program execution is suspended and a branch to the interrupt vector table is performed. With the PEC just one cycle is 'stolen' from the current CPU activity to perform the PEC service. A PEC service implies a single byte or word data transfer between any two memory locations with an additional increment of either the PEC source pointer, the destination pointer, or both. An individual PEC transfer counter is implicitly decremented for each PEC service except when performing in the continuous transfer mode. When this counter reaches zero, a standard interrupt is performed to the corresponding source-related vector location. PEC services are particularly well suited to supporting the transmission or reception of blocks of data. The XE161FU has eight PEC channels, each with fast interrupt-driven data transfer capabilities.

With a minimum interrupt response time of 7/11[1)] CPU clocks, the XE161FU can react quickly to the occurrence of non-deterministic events.

Interrupt Nodes and Source Selection

The interrupt system provides 46 physical nodes with separate control register containing an interrupt request flag, an interrupt enable flag and an interrupt priority bit field. Most interrupt sources are assigned to a dedicated node. A particular subset of interrupt sources shares a set of nodes. The source selection can be programmed using the interrupt source selection (ISSR) registers.

External Request Unit (ERU)

A dedicated External Request Unit (ERU) is provided to route and preprocess selected on-chip peripheral and external interrupt requests. The ERU features 4 programmable input channels with event trigger logic (ETL) a routing matrix and 4 output gating units (OGU). The ETL features rising edge, falling edge, or both edges event detection. The OGU combines the detected interrupt events and provides filtering capabilities depending on a programmable pattern match or miss.

Trap Processing

The XE161FU provides efficient mechanisms to identify and process exceptions or error conditions that arise during run-time, the so-called 'Hardware Traps'. A hardware trap causes an immediate system reaction similar to a standard interrupt service (branching

1) Depending if the jump cache is used or not.

to a dedicated vector table location). The occurrence of a hardware trap is also indicated by a single bit in the trap flag register (TFR). Unless another higher-priority trap service is in progress, a hardware trap will interrupt any ongoing program execution. In turn, hardware trap services can normally not be interrupted by standard or PEC interrupts.

Depending on the package option up to 3 External Service Request (ESR) pins are provided. The ESR unit processes their input values and allows to implement user controlled trap functions (System Requests SR0 and SR1). In this way reset, wakeup and power control can be efficiently realized.

Software interrupts are supported by the 'TRAP' instruction in combination with an individual trap (interrupt) number. Alternatively to emulate an interrupt by software a program can trigger interrupt requests by writing the Interrupt Request (IR) bit of an interrupt control register.

3.6 On-Chip Debug Support (OCDS)

The On-Chip Debug Support system built into the XE161FU provides a broad range of debug and emulation features. User software running on the XE161FU can be debugged within the target system environment.

The OCDS is controlled by an external debugging device via the debug interface. This consists of the 2-pin Device Access Port (DAP) or of the 1-pin Single Pin DAP (SPD) or of the JTAG port conforming to IEEE-1149. The debug interface can be completed with an optional break interface.

The debugger controls the OCDS with a set of dedicated registers accessible via the debug interface (SPD, DAP or JTAG). In addition the OCDS system can be controlled by the CPU, e.g. by a monitor program. An injection interface allows the execution of OCDS-generated instructions by the CPU.

Multiple breakpoints can be triggered by on-chip hardware, by software, or by an external trigger input. Single stepping is supported, as is the injection of arbitrary instructions and read/write access to the complete internal address space. A breakpoint trigger can be answered with a CPU halt, a monitor call, a data transfer, or/and the activation of an external signal.

Tracing of data can be obtained via the debug interface, or via the external bus interface for increased performance.

Tracing of program execution is supported by the XE166 Family emulation device.

The SPD interface uses one interface signal, DAP interface uses two interface signals, the JTAG interface uses four interface signals, to communicate with external circuitry. The debug interface can be amended with two optional break lines.

3.7 Capture/Compare Unit (CC2)

The CAPCOM unit supports generation and control of timing sequences on up to 16 channels with a maximum resolution of one system clock cycle (eight cycles in staggered mode). The CAPCOM unit is typically used to handle high-speed I/O tasks such as pulse and waveform generation, pulse width modulation (PWM), digital to analog (D/A) conversion, software timing, or time recording with respect to external events.

Two 16-bit timers with reload registers provide two independent time bases for the capture/compare register array.

The input clock for the timers is programmable to several prescaled values of the internal system clock, or may be derived from an overflow/underflow of timer T6 in module GPT2. This provides a wide range of variation for the timer period and resolution and allows precise adjustments to the application specific requirements. In addition, external count inputs allow event scheduling for the capture/compare registers relative to external events.

The capture/compare register array contains 16 dual purpose capture/compare registers, each of which may be individually allocated to either CAPCOM timer and programmed for capture or compare function.
All registers have each one port pin associated with it which serves as an input pin for triggering the capture function, or as an output pin to indicate the occurrence of a compare event.

When a capture/compare register has been selected for capture mode, the current contents of the allocated timer will be latched (‘captured’) into the capture/compare register in response to an external event at the port pin which is associated with this register. In addition, a specific interrupt request for this capture/compare register is generated. Either a positive, a negative, or both a positive and a negative external signal transition at the pin can be selected as the triggering event.

The contents of all registers which have been selected for one of the five compare modes are continuously compared with the contents of the allocated timers.

When a match occurs between the timer value and the value in a capture/compare register, specific actions will be taken based on the selected compare mode.

Table 9 Compare Modes

Compare Modes	Function
Mode 0	Interrupt-only compare mode; Several compare interrupts per timer period are possible
Mode 1	Pin toggles on each compare match; Several compare events per timer period are possible

Table 9 Compare Modes (cont'd)

Compare Modes	Function
Mode 2	Interrupt-only compare mode; Only one compare interrupt per timer period is generated
Mode 3	Pin set '1' on match; pin reset '0' on compare timer overflow; Only one compare event per timer period is generated
Double Register Mode	Two registers operate on one pin; Pin toggles on each compare match; Several compare events per timer period are possible
Single Event Mode	Generates single edges or pulses; Can be used with any compare mode

When a capture/compare register has been selected for capture mode, the current contents of the allocated timer will be latched ('captured') into the capture/compare register in response to an external event at the port pin associated with this register. In addition, a specific interrupt request for this capture/compare register is generated. Either a positive, a negative, or both a positive and a negative external signal transition at the pin can be selected as the triggering event.

The contents of all registers selected for one of the five compare modes are continuously compared with the contents of the allocated timers.

When a match occurs between the timer value and the value in a capture/compare register, specific actions will be taken based on the compare mode selected.

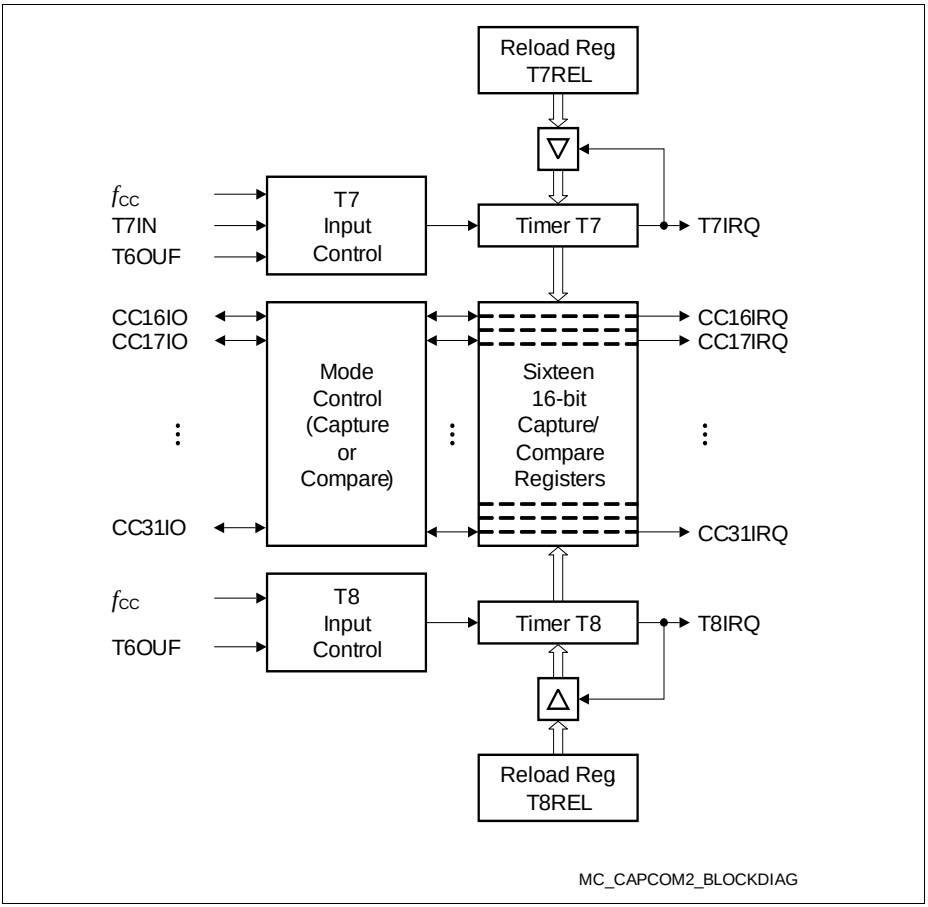

Figure 5 CAPCOM Unit Block Diagram

3.8 Capture/Compare Units CCU6x

The XE161FU types feature the CCU60 unit.

CCU6 is a high-resolution capture and compare unit with application-specific modes. It provides inputs to start the timers synchronously, an important feature in devices with several CCU6 modules.

The module provides two independent timers (T12, T13), that can be used for PWM generation, especially for AC motor control. Additionally, special control modes for block commutation and multi-phase machines are supported.

Timer 12 Features

- Three capture/compare channels, where each channel can be used either as a capture or as a compare channel.
- Supports generation of a three-phase PWM (six outputs, individual signals for high-side and low-side switches)
- 16-bit resolution, maximum count frequency = peripheral clock
- Dead-time control for each channel to avoid short circuits in the power stage
- Concurrent update of the required T12/13 registers
- Center-aligned and edge-aligned PWM can be generated
- Single-shot mode supported
- Many interrupt request sources
- Hysteresis-like control mode
- Automatic start on a HW event (T12HR, for synchronization purposes)

Timer 13 Features

- One independent compare channel with one output
- 16-bit resolution, maximum count frequency = peripheral clock
- Can be synchronized to T12
- Interrupt generation at period match and compare match
- Single-shot mode supported
- Automatic start on a HW event (T13HR, for synchronization purposes)

Additional Features

- Block commutation for brushless DC drives implemented
- Position detection via Hall sensor pattern
- Automatic rotational speed measurement for block commutation
- Integrated error handling
- Fast emergency stop without CPU load via external signal ($\overline{\text{CTRAP}}$)
- Control modes for multi-channel AC drives
- Output levels can be selected and adapted to the power stage

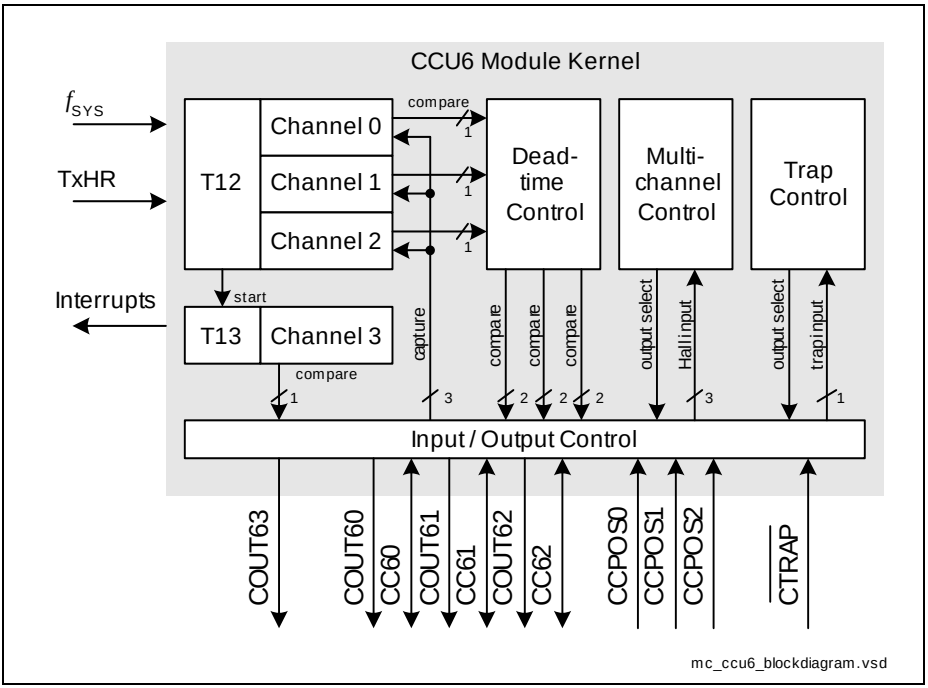

Figure 6 CCU6 Block Diagram

Timer T12 can work in capture and/or compare mode for its three channels. The modes can also be combined. Timer T13 can work in compare mode only. The multi-channel control unit generates output patterns that can be modulated by timer T12 and/or timer T13. The modulation sources can be selected and combined for signal modulation.

3.9 General Purpose Timer (GPT12E) Unit

The GPT12E unit is a very flexible multifunctional timer/counter structure which can be used for many different timing tasks such as event timing and counting, pulse width and duty cycle measurements, pulse generation, or pulse multiplication.

The GPT12E unit incorporates five 16-bit timers organized in two separate modules, GPT1 and GPT2. Each timer in each module may either operate independently in a number of different modes or be concatenated with another timer of the same module.

Each of the three timers T2, T3, T4 of **module GPT1** can be configured individually for one of four basic modes of operation: Timer, Gated Timer, Counter, and Incremental Interface Mode. In Timer Mode, the input clock for a timer is derived from the system clock and divided by a programmable prescaler. Counter Mode allows timer clocking in reference to external events.

Pulse width or duty cycle measurement is supported in Gated Timer Mode, where the operation of a timer is controlled by the ‘gate’ level on an external input pin. For these purposes each timer has one associated port pin (TxIN) which serves as a gate or clock input. The maximum resolution of the timers in module GPT1 is 4 system clock cycles.

The counting direction (up/down) for each timer can be programmed by software or altered dynamically by an external signal on a port pin (TxEUD), e.g. to facilitate position tracking.

In Incremental Interface Mode the GPT1 timers can be directly connected to the incremental position sensor signals A and B through their respective inputs TxIN and TxEUD. Direction and counting signals are internally derived from these two input signals, so that the contents of the respective timer Tx corresponds to the sensor position. The third position sensor signal TOP0 can be connected to an interrupt input.

Timer T3 has an output toggle latch (T3OTL) which changes its state on each timer overflow/underflow. The state of this latch may be output on pin T3OUT e.g. for time out monitoring of external hardware components. It may also be used internally to clock timers T2 and T4 for measuring long time periods with high resolution.

In addition to the basic operating modes, T2 and T4 may be configured as reload or capture register for timer T3. A timer used as capture or reload register is stopped. The contents of timer T3 is captured into T2 or T4 in response to a signal at the associated input pin (TxIN). Timer T3 is reloaded with the contents of T2 or T4, triggered either by an external signal or a selectable state transition of its toggle latch T3OTL. When both T2 and T4 are configured to alternately reload T3 on opposite state transitions of T3OTL with the low and high times of a PWM signal, this signal can be continuously generated without software intervention.

Note: Signals T2IN, T2EUD, T4EUD, T6OUT, T6IN and T6EUD are not connected to pins.

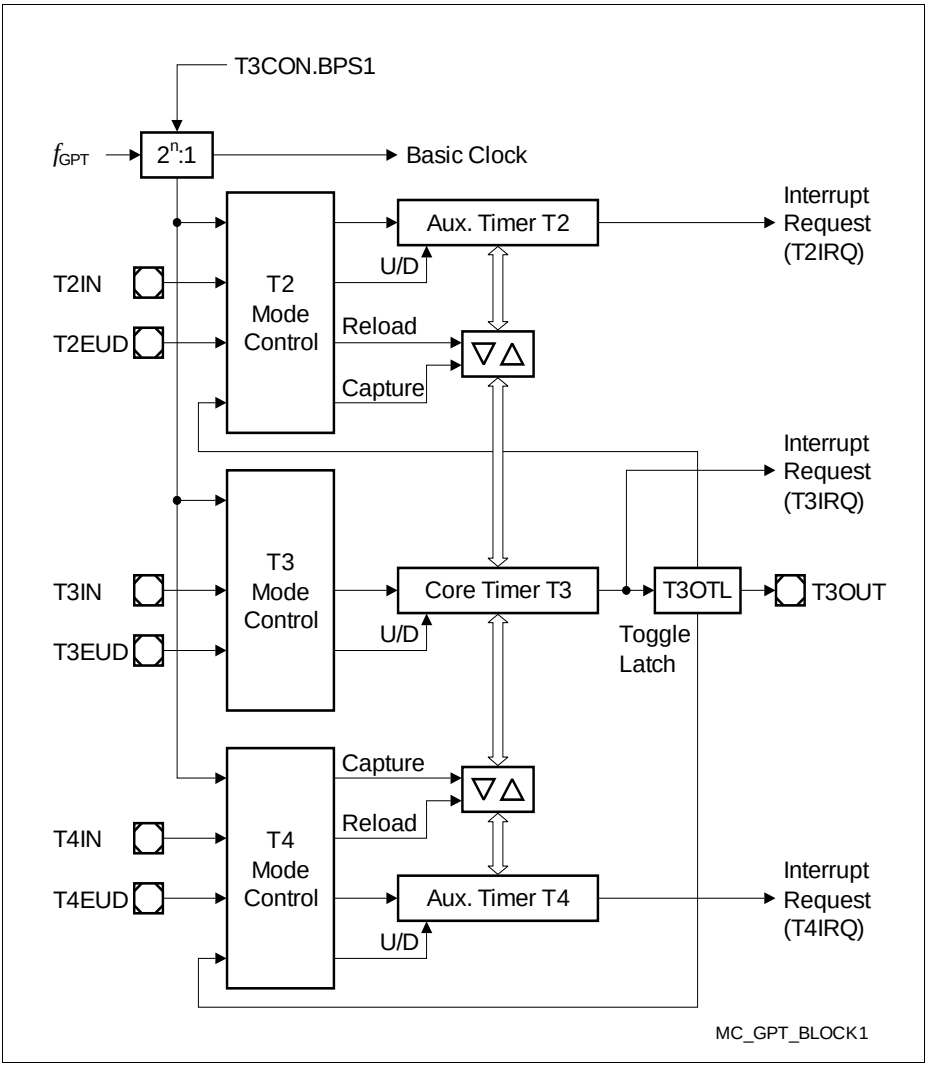

Figure 7 Block Diagram of GPT1

With its maximum resolution of 2 system clock cycles, the **GPT2 module** provides precise event control and time measurement. It includes two timers (T5, T6) and a capture/reload register (CAPREL). Both timers can be clocked with an input clock which is derived from the CPU clock via a programmable prescaler or with external signals. The counting direction (up/down) for each timer can be programmed by software or altered dynamically with an external signal on a port pin (TxEUD). Concatenation of the timers is supported with the output toggle latch (T6OTL) of timer T6, which changes its state on each timer overflow/underflow.

The state of this latch may be used to clock timer T5, and/or it may be output on pin T6OUT. The overflows/underflows of timer T6 can also be used to clock the CAPCOM2 timers and to initiate a reload from the CAPREL register.

The CAPREL register can capture the contents of timer T5 based on an external signal transition on the corresponding port pin (CAPIN); timer T5 may optionally be cleared after the capture procedure. This allows the XE161FU to measure absolute time differences or to perform pulse multiplication without software overhead.

The capture trigger (timer T5 to CAPREL) can also be generated upon transitions of GPT1 timer T3 inputs T3IN and/or T3EUD. This is especially advantageous when T3 operates in Incremental Interface Mode.

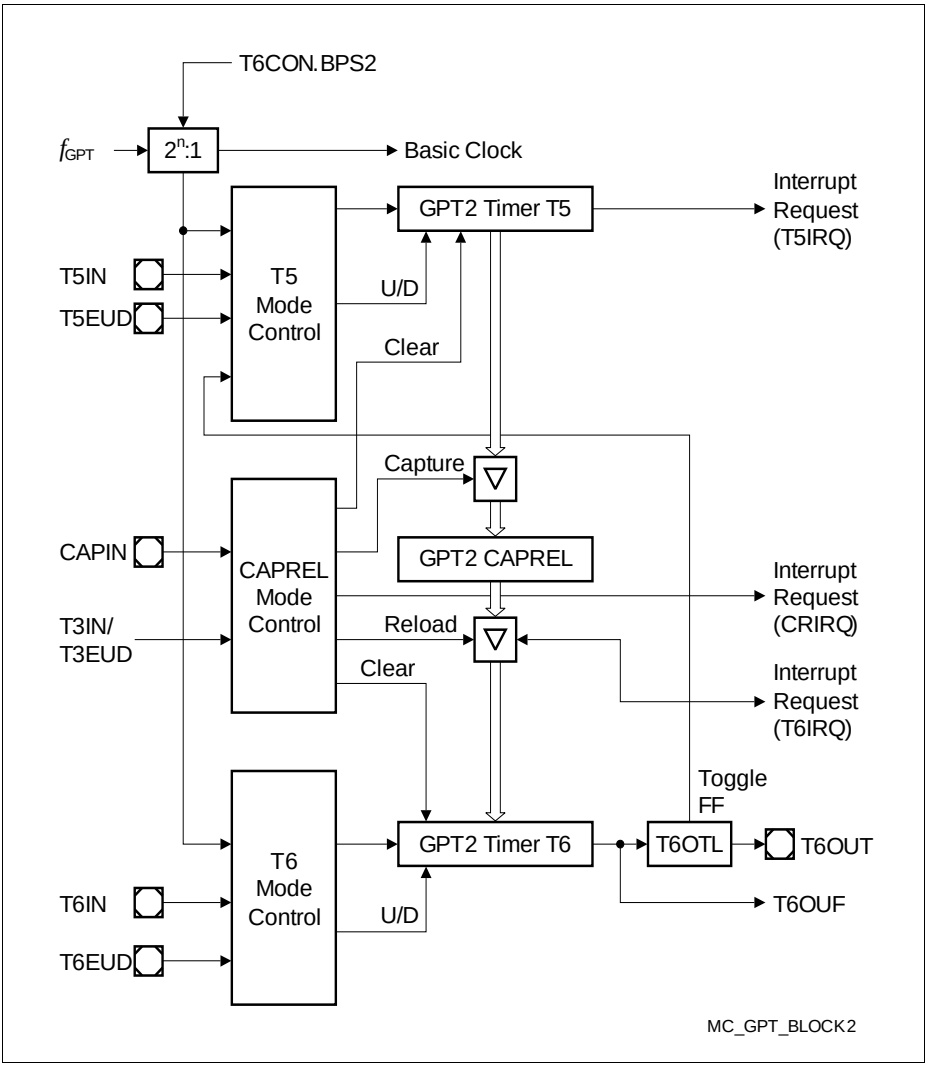

Figure 8 Block Diagram of GPT2

3.10 Real Time Clock

The Real Time Clock (RTC) module of the XE161FU can be clocked with a clock signal selected from internal sources or external sources (pins).

The RTC basically consists of a chain of divider blocks:

- Selectable 32:1 and 8:1 dividers (on - off)
- The reloadable 16-bit timer T14
- The 32-bit RTC timer block (accessible via registers RTCH and RTCL) consisting of:
  – a reloadable 10-bit timer
  – a reloadable 6-bit timer
  – a reloadable 6-bit timer
  – a reloadable 10-bit timer

All timers count up. Each timer can generate an interrupt request. All requests are combined to a common node request.

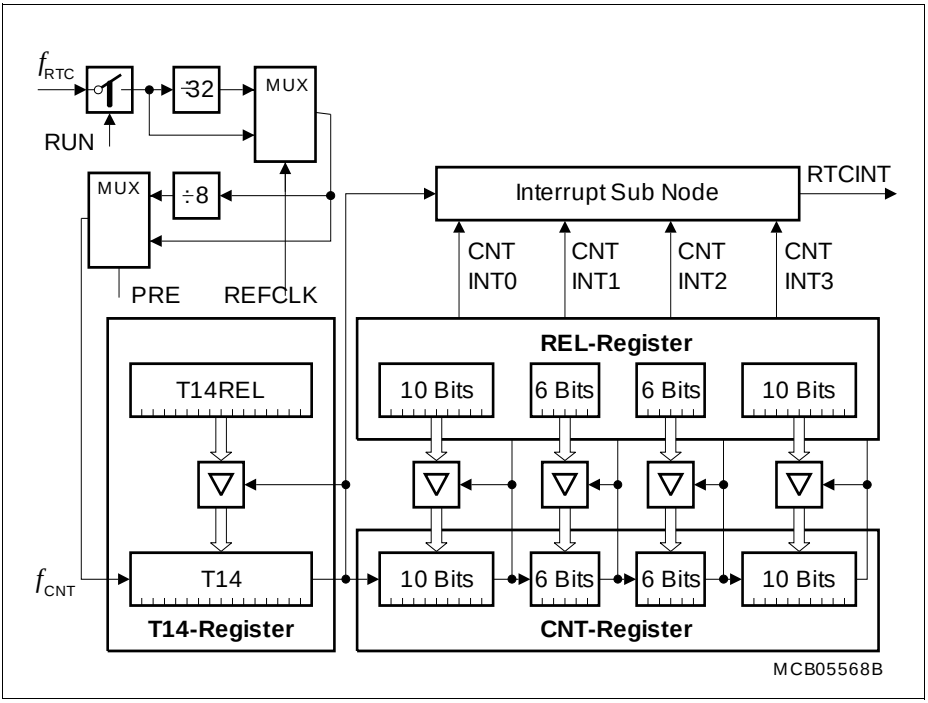

Figure 9 RTC Block Diagram

Note: The registers associated with the RTC are only affected by a power reset.

The RTC module can be used for different purposes:

- System clock to determine the current time and date
- Cyclic time-based interrupt, to provide a system time tick independent of CPU frequency and other resources
- 48-bit timer for long-term measurements
- Alarm interrupt at a defined time

3.11 A/D Converters

For analog signal measurement, a 12-bit A/D converters (ADC0) with 10 multiplexed input channels and a sample and hold circuit have been integrated on-chip. Conversions use the successive approximation method. The sample time (to charge the capacitors) and the conversion time are programmable so that they can be adjusted to the external circuit. The A/D converters can also operate in 8-bit and 10-bit conversion mode, further reducing the conversion time.

Several independent conversion result registers, selectable interrupt requests, and highly flexible conversion sequences provide a high degree of programmability to meet the application requirements.

For applications that require more analog input channels, external analog multiplexers can be controlled automatically. For applications that require fewer analog input channels, the remaining channel inputs can be used as digital input port pins.

The A/D converters of the XE161FU support two types of request sources which can be triggered by several internal and external events.

- Parallel requests are activated at the same time and then executed in a predefined sequence.
- Queued requests are executed in a user-defined sequence.

In addition, the conversion of a specific channel can be inserted into a running sequence without disturbing that sequence. All requests are arbitrated according to the priority level assigned to them.

Data reduction features reduce the number of required CPU access operations allowing the precise evaluation of analog inputs (high conversion rate) even at a low CPU speed. Result data can be reduced by limit checking or accumulation of results. Two cascadable filters build the hardware to generate a configurable moving average.

The Peripheral Event Controller (PEC) can be used to control the A/D converters or to automatically store conversion results to a table in memory for later evaluation, without requiring the overhead of entering and exiting interrupt routines for each data transfer. Each A/D converter contains eight result registers which can be concatenated to build a result FIFO. Wait-for-read mode can be enabled for each result register to prevent the loss of conversion data.

In order to decouple analog inputs from digital noise and to avoid input trigger noise, those pins used for analog input can be disconnected from the digital input stages. This can be selected for each pin separately with the Port x Digital Input Disable registers.

The Auto-Power-Down feature of the A/D converters minimizes the power consumption when no conversion is in progress.

Broken wire detection for each channel and a multiplexer test mode provide information to verify the proper operation of the analog signal sources (e.g. a sensor system).

3.12 Universal Serial Interface Channel Modules (USIC)

The XE161FU features the USIC module USIC0. The module provides two serial communication channels.

The Universal Serial Interface Channel (USIC) module is based on a generic data shift and data storage structure which is identical for all supported serial communication protocols. Each channel supports complete full-duplex operation with a basic data buffer structure (one transmit buffer and two receive buffer stages). In addition, the data handling software can use FIFOs.

The protocol part (generation of shift clock/data/control signals) is independent of the general part and is handled by protocol-specific preprocessors (PPPs).

The USIC's input/output lines are connected to pins by a pin routing unit. The inputs and outputs of each USIC channel can be assigned to different interface pins, providing great flexibility to the application software. All assignments can be made during runtime.

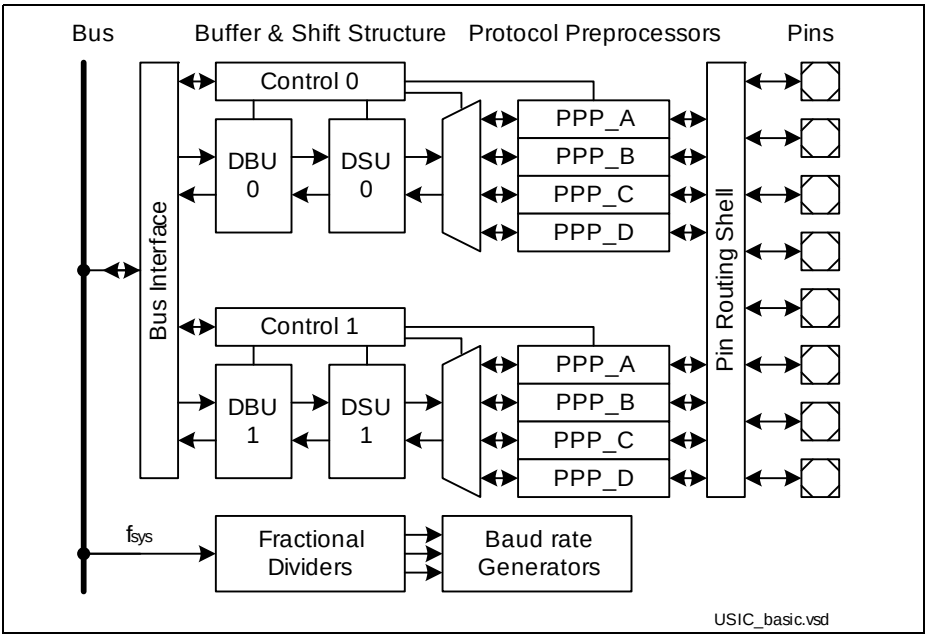

Figure 10 General Structure of a USIC Module

The regular structure of the USIC module brings the following advantages:

- Higher flexibility through configuration with same look-and-feel for data management
- Reduced complexity for low-level drivers serving different protocols
- Wide range of protocols with improved performances (baud rate, buffer handling)

Target Protocols

Each USIC channel can receive and transmit data frames with a selectable data word width from 1 to 16 bits in each of the following protocols:

- **UART** (asynchronous serial channel)
  - module capability: maximum baud rate = f_{SYS} / 4
  - data frame length programmable from 1 to 63 bits
  - MSB or LSB first
- **LIN** Support (Local Interconnect Network)
  - module capability: maximum baud rate = f_{SYS} / 16
  - checksum generation under software control
  - baud rate detection possible by built-in capture event of baud rate generator
- **SSC/SPI** (synchronous serial channel with or without data buffer)
  - module capability: maximum baud rate = f_{SYS} / 2, limited by loop delay
  - number of data bits programmable from 1 to 63, more with explicit stop condition
  - MSB or LSB first
  - optional control of slave select signals
- **IIC** (Inter-IC Bus)
  - supports baud rates of 100 kbit/s and 400 kbit/s
- **IIS** (Inter-IC Sound Bus)
  - module capability: maximum baud rate = f_{SYS} / 2

Note: Depending on the selected functions (such as digital filters, input synchronization stages, sample point adjustment, etc.), the maximum achievable baud rate can be limited. Please note that there may be additional delays, such as internal or external propagation delays and driver delays (e.g. for collision detection in UART mode, for IIC, etc.).

3.13 System Timer

The System Timer consists of a programmable prescaler and two concatenated timers (10 bits and 6 bits). Both timers can generate interrupt requests. The clock source can be selected and the timers can also run during power reduction modes.

Therefore, the System Timer enables the software to maintain the current time for scheduling functions or for the implementation of a clock.

3.14 Window Watchdog Timer

The Window Watchdog Timer is one of the fail-safe mechanisms which have been implemented to prevent the controller from malfunctioning for longer periods of time.

The Window Watchdog Timer is always enabled after an application reset of the chip. It can be disabled and enabled at any time by executing the instructions DISWDT and ENWDT respectively. The software has to service the Window Watchdog Timer before

it overflows. If this is not the case because of a hardware or software failure, the Window Watchdog Timer overflows, generating a reset request.

The Window Watchdog Timer has a ‘programmable window boundary’, it disallows refresh during the Window Watchdog Timer’s count-up. A refresh during this window-boundary will cause the Window Watchdog Timer to also generate a reset request.

The Window Watchdog Timer is a 16-bit timer clocked with either the system clock or the independent wake-up oscillator clock, divided by 16,384 or 256. The Window Watchdog Timer register is set to a prespecified reload value (stored in WDTREL) in order to allow further variation of the monitored time interval. Each time it is serviced by the application software, the Window Watchdog Timer is reloaded.

When clocked by f_{SYS} = 66 MHz, time intervals between 15.2 ns and 16.3 s can be monitored.

When clocked by f_{WU} = 500 kHz, time intervals between 2.0 µs and 2147.5 s can be monitored.

The default Watchdog Timer interval after power-up is 0.13 s (@ f_{WU} = 500 kHz).

3.15 Clock Generation

The Clock Generation Unit can generate the system clock signal f_{SYS} for the XE161FU from a number of external or internal clock sources:

- External clock signals with pad voltage or core voltage levels
- External crystal or resonator using the on-chip oscillator
- On-chip clock source for operation without crystal/resonator
- Wake-up clock (ultra-low-power) to further reduce power consumption

The programmable on-chip PLL with multiple prescalers generates a clock signal for maximum system performance from standard crystals, a clock input signal, or from the on-chip clock source. See also **Section 4.7.2**.

The Oscillator Watchdog (OWD) generates an interrupt if the crystal oscillator frequency falls below a certain limit or stops completely. In this case, the system can be supplied with an emergency clock to enable operation even after an external clock failure.

All available clock signals can be output on the EXTCLK pin.

3.16 Parallel Ports

The XE161FU provides up to 33 I/O lines which are organized into 3 input/output ports and 1 input port. All port lines are bit-addressable, and all input/output lines can be individually (bit-wise) configured via port control registers. This configuration selects the direction (input/output), push/pull or open-drain operation, activation of pull devices, and edge characteristics (shape) and driver characteristics (output current) of the port drivers. The I/O ports are true bidirectional ports which are switched to high impedance state when configured as inputs. During the internal reset, all port pins are configured as inputs without pull devices active.

All port lines have alternate input or output functions associated with them. These alternate functions can be programmed to be assigned to various port pins to support the best utilization for a given application. For this reason, certain functions appear several times in **Table 10**.

All port lines that are not used for alternate functions may be used as general purpose I/O lines.

Table 10 Summary of the XE161FU's Ports

Group	Width	I/O	Connected Modules
P2	12	I/O	Analog inputs, ADC, CC2, DAP/JTAG, GPT12E, SCU, USIC
P5	6	I	Analog inputs, CCU6, JTAG, GPT12E, CC2
P6	3	I/O	Analog inputs, ADC, JTAG, GPT12E
P10	12	I/O	CCU6, GPT12E, DAP/JTAG, SPD, USIC

3.17 Power Management

The XE161FU provides the means to control the power it consumes either at a given time or averaged over a certain duration.
Two mechanisms can be used (and partly in parallel):

- **Clock Generation Management** controls the frequency of internal and external clock signals. Clock signals for currently inactive parts of logic are disabled automatically. The user can drastically reduce the consumed power by reducing the XE161FU system clock frequency.
  External circuits can be controlled using the programmable frequency output EXTCLK.
- **Peripheral Management** permits temporary disabling of peripheral modules. Each peripheral can be disabled and enabled separately. The CPU can be switched off while the peripherals can continue to operate.

Wake-up from power reduction modes can be triggered either externally with signals generated by the external system, or internally by the on-chip wake-up timer. This supports intermittent operation of the XE161FU by generating cyclic wake-up signals. Full performance is available to quickly react to action requests while the intermittent sleep phases greatly reduce the average system power consumption.

Note: When selecting the supply voltage and the clock source and generation method, the required parameters must be carefully written to the respective bit fields, to avoid unintended intermediate states. Recommended sequences are provided which ensure the intended operation of power supply system and clock system. Please refer to the Programmer's Guide.

3.18 Instruction Set Summary

Table 11 lists the instructions of the XE161FU.
The addressing modes that can be used with a specific instruction, the function of the instructions, parameters for conditional execution of instructions, and the opcodes for each instruction can be found in the **"Instruction Set Manual"**.

This document also provides a detailed description of each instruction.

Table 11 Instruction Set Summary

Mnemonic	Description	Bytes
ADD(B)	Add word (byte) operands	2 / 4
ADDC(B)	Add word (byte) operands with Carry	2 / 4
SUB(B)	Subtract word (byte) operands	2 / 4
SUBC(B)	Subtract word (byte) operands with Carry	2 / 4
MUL(U)	(Un)Signed multiply direct GPR by direct GPR (16- × 16-bit)	2
DIV(U)	(Un)Signed divide register MDL by direct GPR (16-/16-bit)	2
DIVL(U)	(Un)Signed long divide reg. MD by direct GPR (32-/16-bit)	2
CPL(B)	Complement direct word (byte) GPR	2
NEG(B)	Negate direct word (byte) GPR	2
AND(B)	Bitwise AND, (word/byte operands)	2 / 4
OR(B)	Bitwise OR, (word/byte operands)	2 / 4
XOR(B)	Bitwise exclusive OR, (word/byte operands)	2 / 4
BCLR/BSET	Clear/Set direct bit	2
BMOV(N)	Move (negated) direct bit to direct bit	4
BAND/BOR/BXOR	AND/OR/XOR direct bit with direct bit	4
BCMP	Compare direct bit to direct bit	4
BFLDH/BFLDL	Bitwise modify masked high/low byte of bit-addressable direct word memory with immediate data	4
CMP(B)	Compare word (byte) operands	2 / 4
CMPD1/2	Compare word data to GPR and decrement GPR by 1/2	2 / 4
CMPI1/2	Compare word data to GPR and increment GPR by 1/2	2 / 4
PRIOR	Determine number of shift cycles to normalize direct word GPR and store result in direct word GPR	2
SHL/SHR	Shift left/right direct word GPR	2

Table 11 Instruction Set Summary (cont'd)

Mnemonic	Description	Bytes
ROL/ROR	Rotate left/right direct word GPR	2
ASHR	Arithmetic (sign bit) shift right direct word GPR	2
MOV(B)	Move word (byte) data	2 / 4
MOVBS/Z	Move byte operand to word op. with sign/zero extension	2 / 4
JMPA/I/R	Jump absolute/indirect/relative if condition is met	4
JMPS	Jump absolute to a code segment	4
JB(C)	Jump relative if direct bit is set (and clear bit)	4
JNB(S)	Jump relative if direct bit is not set (and set bit)	4
CALLA/I/R	Call absolute/indirect/relative subroutine if condition is met	4
CALLS	Call absolute subroutine in any code segment	4
PCALL	Push direct word register onto system stack and call absolute subroutine	4
TRAP	Call interrupt service routine via immediate trap number	2
PUSH/POP	Push/pop direct word register onto/from system stack	2
SCXT	Push direct word register onto system stack and update register with word operand	4
RET(P)	Return from intra-segment subroutine (and pop direct word register from system stack)	2
RETS	Return from inter-segment subroutine	2
RETI	Return from interrupt service subroutine	2
SBRK	Software Break	2
SRST	Software Reset	4
IDLE	Enter Idle Mode	4
PWRDN	Unused instruction[1)]	4
SRVWDT	Service Watchdog Timer	4
DISWDT/ENWDT	Disable/Enable Watchdog Timer	4
EINIT	End-of-Initialization Register Lock	4
ATOMIC	Begin ATOMIC sequence	2
EXTR	Begin EXTended Register sequence	2
EXTP(R)	Begin EXTended Page (and Register) sequence	2 / 4
EXTS(R)	Begin EXTended Segment (and Register) sequence	2 / 4

Table 11 Instruction Set Summary (cont'd)

Mnemonic	Description	Bytes
NOP	Null operation	2
CoMUL/CoMAC	Multiply (and accumulate)	4
CoADD/CoSUB	Add/Subtract	4
Co(A)SHR	(Arithmetic) Shift right	4
CoSHL	Shift left	4
CoLOAD/STORE	Load accumulator/Store MAC register	4
CoCMP	Compare	4
CoMAX/MIN	Maximum/Minimum	4
CoABS/CoRND	Absolute value/Round accumulator	4
CoMOV	Data move	4
CoNEG/NOP	Negate accumulator/Null operation	4

1) The Enter Power Down Mode instruction is not used in the XE161FU, due to the enhanced power control scheme. PWRDN will be correctly decoded, but will trigger no action.

4 Electrical Parameters

The operating range for the XE161FU is defined by its electrical parameters. For proper operation the specified limits must be respected when integrating the device in its target environment.

4.1 General Parameters

These parameters are valid for all subsequent descriptions, unless otherwise noted.

Table 12 Absolute Maximum Rating Parameters

Parameter	Symbol	Values			Unit	Note / Test Condition
		Min.	Typ.	Max.		
Output current on a pin when high value is driven	I_{OH} SR	-15	–	–	mA	
Output current on a pin when low value is driven	I_{OL} SR	–	–	15	mA	
Overload current	I_{OV} SR	-5	–	5	mA	1)
Absolute sum of overload currents	$\Sigma\|I_{OV}\|$ SR	–	–	50	mA	1)
Junction Temperature	T_J SR	-40	–	150	°C	
Storage Temperature	T_{ST} SR	-65	–	150	°C	
Digital supply voltage for IO pads and voltage regulators	V_{DDP} SR	-0.5	–	6.0	V	
Voltage on any pin with respect to ground (Vss)	V_{IN} SR	-0.5	–	V_{DDP} + 0.5	V	$V_{IN} \leq V_{DDP(max)}$

1) Overload condition occurs if the input voltage V_{IN} is out of the absolute maximum rating range. In this case the current must be limited to the listed values by design measures.

Note: Stresses above the values listed under "Absolute Maximum Ratings" may cause permanent damage to the device. This is a stress rating only. Functional operation of the device at these or any other conditions above those indicated in the operational sections of this specification is not implied. Exposure to absolute maximum rating conditions for an extended time may affect device reliability.
During absolute maximum rating overload conditions ($V_{IN} > V_{DDP}$ or $V_{IN} < V_{SS}$) the voltage on V_{DDP} pins with respect to ground (V_{SS}) must not exceed the values defined by the absolute maximum ratings.

4.1.1 Operating Conditions

The following operating conditions must not be exceeded to ensure correct operation of the XE161FU. All parameters specified in the following sections refer to these operating conditions, unless otherwise noticed.

Note: Typical parameter values refer to room temperature and nominal supply voltage, minimum/maximum parameter values also include conditions of minimum/maximum temperature and minimum/maximum supply voltage. Additional details are described where applicable.

Table 13 Operating Conditions

Parameter	Symbol	Values			Unit	Note / Test Condition
		Min.	Typ.	Max.		
Voltage Regulator Buffer Capacitance for DMP_M	C_{EVRM} SR	1.0	–	4.7	µF	[1)2)]
External Load Capacitance	C_L SR	–	20[3)]	–	pF	pin out driver= default [4)]
System frequency	f_{SYS} SR	–	–	66	MHz	[5)]
Overload current for analog inputs[6)]	I_{OVA} SR	-2	–	5	mA	not subject to production test
Overload current for digital inputs[6)]	I_{OVD} SR	-5	–	5	mA	not subject to production test
Overload current coupling factor for analog inputs[7)]	K_{OVA} CC	–	2.5×10^{-4}	1.5×10^{-3}	-	I_{OV}< 0 mA; not subject to production test
		–	1.0×10^{-6}	1.0×10^{-4}	-	I_{OV}> 0 mA; not subject to production test

Table 13 Operating Conditions (cont'd)

Parameter	Symbol	Values			Unit	Note / Test Condition
		Min.	Typ.	Max.		
Overload current coupling factor for digital I/O pins	K_{OVD} CC	–	1.0 x 10^{-2}	3.0 x 10^{-2}		I_{OV}< 0 mA; not subject to production test
		–	1.0 x 10^{-4}	5.0 x 10^{-3}		I_{OV}> 0 mA; not subject to production test
Absolute sum of overload currents	$\Sigma\|I_{OV}\|$ SR	–	–	30	mA	not subject to production test
Digital core supply voltage for domain M[8)]	V_{DDIM} CC	–	1.5	–	V	
Digital supply voltage for IO pads and voltage regulators	V_{DDP} SR	3.0	–	5.5	V	
Digital ground voltage	V_{SS} SR	–	0	–	V	

1) To ensure the stability of the voltage regulators the EVRs must be buffered with ceramic capacitors. Separate buffer capacitors with the recomended values shall be connected as close as possible to each V_{DDIM} pin to keep the resistance of the board tracks below 2 Ohm. Connect all V_{DDIM} pins together. The minimum capacitance value is required for proper operation under all conditions (e.g. temperature). Higher values slightly increase the startup time.

2) Use one Capacitor for each pin.

3) This is the reference load. For bigger capacitive loads, use the derating factors listed in the PAD properties section.

4) The timing is valid for pin drivers operating in default current mode (selected after reset). Reducing the output current may lead to increased delays or reduced driving capability (C_L).

5) The operating frequency range may be reduced for specific device types. This is indicated in the device designation (...FxxL). 40 MHz devices are marked ...F40L.

6) Overload conditions occur if the standard operating conditions are exceeded, i.e. the voltage on any pin exceeds the specified range: $V_{OV} > V_{IHmax}$ ($I_{OV} > 0$) or $V_{OV} < V_{ILmin}$ ($(I_{OV} < 0$). The absolute sum of input overload currents on all pins may not exceed 50 mA. The supply voltages must remain within the specified limits. Proper operation under overload conditions depends on the application. Overload conditions must not occur on pin XTAL1.

7) An overload current (I_{OV}) through a pin injects a certain error current (I_{INJ}) into the adjacent pins. This error current adds to the respective pins leakage current (I_{OZ}). The amount of error current depends on the overload current and is defined by the overload coupling factor K_{OV}. The polarity of the injected error current is inverse compared to the polarity of the overload current that produces it.The total current through a pin is $|I_{TOT}| = |I_{OZ}| + (|I_{OV}| \ K_{OV})$. The additional error current may distort the input voltage on analog inputs.

8) Value is controlled by on-chip regulator.

4.2 Voltage Range definitions

The XE161FU timing depends on the supply voltage. If such a dependency exists the timing values are given for 2 voltage areas commonly used. The voltage areas are defined in the following tables.

Table 14 Upper Voltage Range Definition

Parameter	Symbol	Values			Unit	Note / Test Condition
		Min.	Typ.	Max.		
Digital supply voltage for IO pads and voltage regulators	V_{DDP} SR	4.5	5.0	5.5	V	

Table 15 Lower Voltage Range Definition

Parameter	Symbol	Values			Unit	Note / Test Condition
		Min.	Typ.	Max.		
Digital supply voltage for IO pads and voltage regulators	V_{DDP} SR	3.0	3.3	4.5	V	

4.2.1 Parameter Interpretation

The parameters listed in the following include both the characteristics of the XE161FU and its demands on the system. To aid in correctly interpreting the parameters when evaluating them for a design, they are marked accordingly in the column “Symbol”:

CC (**C**ontroller **C**haracteristics):
The logic of the XE161FU provides signals with the specified characteristics.

SR (**S**ystem **R**equirement):
The external system must provide signals with the specified characteristics to the XE161FU.

4.3 DC Parameters

These parameters are static or average values that may be exceeded during switching transitions (e.g. output current).

The XE161FU can operate within a wide supply voltage range from 3.0 V to 5.5 V. However, during operation this supply voltage must remain within 10 percent of the selected nominal supply voltage. It cannot vary across the full operating voltage range.

Because of the supply voltage restriction and because electrical behavior depends on the supply voltage, the parameters are specified separately for the upper and the lower voltage range.

During operation, the supply voltages may only change with a maximum speed of dV/dt < 1 V/ms.

Leakage current is strongly dependent on the operating temperature and the voltage level at the respective pin. The maximum values in the following tables apply under worst case conditions, i.e. maximum temperature and an input level equal to the supply voltage.
The value for the leakage current in an application can be determined by using the respective leakage derating formula (see tables) with values from that application.

The pads of the XE161FU are designed to operate in various driver modes. The DC parameter specifications refer to the pad current limits specified in **Section 4.7.4**.

Pullup/Pulldown Device Behavior

Most pins of the XE161FU feature pullup or pulldown devices. For some special pins these are fixed; for the port pins they can be selected by the application.

The specified current values indicate how to load the respective pin depending on the intended signal level. **Figure 11** shows the current paths.

The shaded resistors shown in the figure may be required to compensate system pull currents that do not match the given limit values.

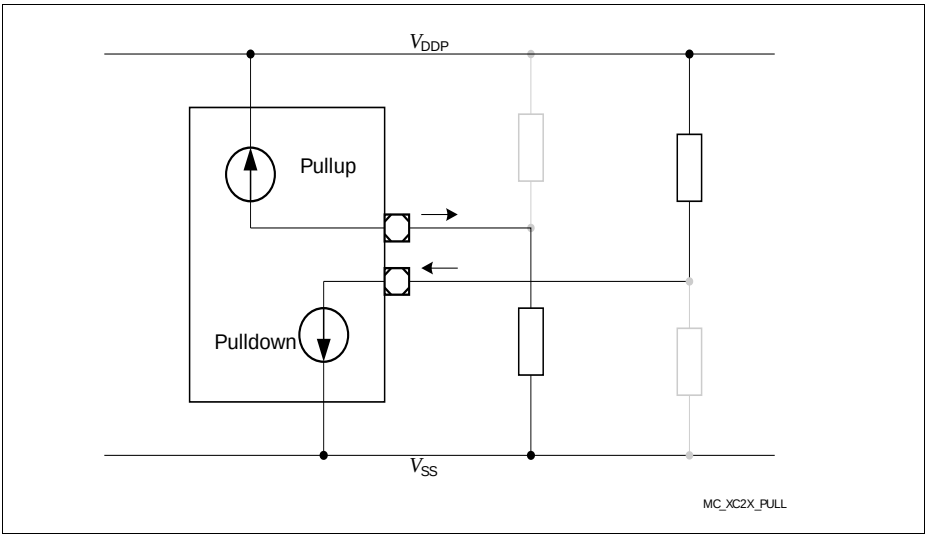

Figure 11 Pullup/Pulldown Current Definition

4.3.1 DC Parameters for Upper Voltage Area

Keeping signal levels within the limits specified in this table ensures operation without overload conditions. For signal levels outside these specifications, also refer to the specification of the overload current I_{OV}.

Note: Operating Conditions apply.

Table 16 is valid under the following conditions: $V_{DDP} \leq$ 5.5 V; V_{DDP}typ. 5 V; $V_{DDP} \geq$ 4.5 V

Table 16 DC Characteristics for Upper Voltage Range

Parameter	Symbol	Values			Unit	Note / Test Condition
		Min.	Typ.	Max.		
Pin capacitance (digital inputs/outputs).	C_{IO} CC	–	–	10	pF	not subject to production test
Input Hysteresis[1)]	HYS CC	0.11 x V_{DDP}	–	–	V	R_S= 0 Ohm
Absolute input leakage current on pins of analog ports[2)]	$\|I_{OZ1}\|$ CC	–	10	200	nA	$V_{IN} > V_{SS}$; $V_{IN} < V_{DDP}$
Absolute input leakage current for all other pins. [2)3)]	$\|I_{OZ2}\|$ CC	–	0.2	5	µA	$T_J \leq$ 110 °C; $V_{IN} > V_{SS}$; $V_{IN} < V_{DDP}$
		–	0.2	10	µA	$T_J \leq$ 150 °C; $V_{IN} > V_{SS}$; $V_{IN} < V_{DDP}$
Pull Level Force Current[4)]	$\|I_{PLF}\|$ SR	220	–	–	µA	$V_{IN} \geq V_{IHmin}$ *(pulldown_enabled)*; $V_{IN} \leq V_{ILmax}$ *(pullup_enabled)*
Pull Level Keep Current[5)]	$\|I_{PLK}\|$ SR	–	–	30	µA	$V_{IN} \geq V_{IHmin}$ *(pullup_enabled);* $V_{IN} \leq V_{ILmax}$ *(pulldown_enabled)*
Input high voltage (all except XTAL1)	V_{IH} SR	0.7 x V_{DDP}	–	V_{DDP} + 0.3	V	

Table 16 DC Characteristics for Upper Voltage Range (cont'd)

Parameter	Symbol	Values			Unit	Note / Test Condition
		Min.	Typ.	Max.		
Input low voltage (all except XTAL1)	V_{IL} SR	-0.3	–	0.3 x V_{DDP}	V	
Output High voltage[6]	V_{OH} CC	V_{DDP} - 1.0	–	–	V	$I_{OH} \geq I_{OHmax}$
		V_{DDP} - 0.4	–	–	V	$I_{OH} \geq I_{OHnom}$ [7]
Output Low Voltage[6]	V_{OL} CC	–	–	0.4	V	$I_{OL} \leq I_{OLnom}$ [8]
		–	–	1.0	V	$I_{OL} \leq I_{OLmax}$

1) Not subject to production test - verified by design/characterization. Hysteresis is implemented to avoid metastable states and switching due to internal ground bounce. It cannot suppress switching due to external system noise under all conditions.

2) If the input voltage exceeds the respective supply voltage due to ground bouncing ($V_{IN} < V_{SS}$) or supply ripple ($V_{IN} > V_{DDP}$), a certain amount of current may flow through the protection diodes. This current adds to the leakage current. An additional error current (I_{INJ}) will flow if an overload current flows through an adjacent pin. Please refer to the definition of the overload coupling factor K_{OV}.

3) The given values are worst-case values. In production test, this leakage current is only tested at 125 °C; other values are ensured by correlation. For derating, please refer to the following descriptions: Leakage derating depending on temperature (T_J = junction temperature [°C]): I_{OZ} = 0.05 x $e^{(1.5 + 0.028 \times TJ>)}$ [µA]. For example, at a temperature of 95 °C the resulting leakage current is 3.2 µA. Leakage derating depending on voltage level (DV = V_{DDP} - V_{PIN} [V]): I_{OZ} = $I_{OZtempmax}$ - (1.6 x DV) (µA]. This voltage derating formula is an approximation which applies for maximum temperature.

4) Drive the indicated minimum current through this pin to change the default pin level driven by the enabled pull device.

5) Limit the current through this pin to the indicated value so that the enabled pull device can keep the default pin level.

6) The maximum deliverable output current of a port driver depends on the selected output driver mode. This specification is not valid for outputs which are switched to open drain mode. In this case the respective output will float and the voltage is determined by the external circuit.

7) As a rule, with decreasing output current the output levels approach the respective supply level (VOL->VSS, VOH->VDDP). However, only the levels for nominal output currents are verified.

8) As a rule, with decreasing output current the output levels approach the respective supply level (V_{OL}->V_{SS}, V_{OH}->V_{DDP}). However, only the levels for nominal output currents are verified.

4.3.2 DC Parameters for Lower Voltage Area

Keeping signal levels within the limits specified in this table ensures operation without overload conditions. For signal levels outside these specifications, also refer to the specification of the overload current I_{OV}.

Note: Operating Conditions apply.

Table 17 is valid under the following conditions: $V_{DDP} \geq$ 3.0 V; V_{DDP}typ. 3.3 V; $V_{DDP} \leq$ 4.5 V

Table 17 DC Characteristics for Lower Voltage Range

Parameter	Symbol	Values			Unit	Note / Test Condition
		Min.	Typ.	Max.		
Pin capacitance (digital inputs/outputs).	C_{IO} CC	–	–	10	pF	not subject to production test
Input Hysteresis[1)]	HYS CC	0.07 x V_{DDP}	–	–	V	R_S= 0 Ohm
Absolute input leakage current on pins of analog ports[2)]	$\|I_{OZ1}\|$ CC	–	10	200	nA	$V_{IN} > V_{SS}$; $V_{IN} < V_{DDP}$
Absolute input leakage current for all other pins. [2)3)]	$\|I_{OZ2}\|$ CC	–	0.2	2	µA	$T_J \leq$ 110 °C; $V_{IN} > V_{SS}$; $V_{IN} < V_{DDP}$
		–	0.2	6	µA	$T_J \leq$ 150 °C; $V_{IN} > V_{SS}$; $V_{IN} < V_{DDP}$
Pull Level Force Current[4)]	$\|I_{PLF}\|$ SR	150	–	–	µA	$V_{IN} \geq V_{IHmin}$ *(pulldown_enabled)*; $V_{IN} \leq V_{ILmax}$ *(pullup_enabled)* ;
Pull Level Keep Current[5)]	$\|I_{PLK}\|$ SR	–	–	10	µA	$V_{IN} \geq V_{IHmin}$ *(pullup_enabled);* $V_{IN} \leq V_{ILmax}$ *(pulldown_enabled)*

Table 17 DC Characteristics for Lower Voltage Range (cont'd)

Parameter	Symbol	Values			Unit	Note / Test Condition
		Min.	Typ.	Max.		
Input high voltage (all except XTAL1)	V_{IH} SR	0.7 x V_{DDP}	–	V_{DDP} + 0.3	V	
Input low voltage (all except XTAL1)	V_{IL} SR	-0.3	–	0.3 x V_{DDP}	V	
Output High voltage[6]	V_{OH} CC	V_{DDP} - 1.0	–	–	V	$I_{OH} \geq I_{OHmax}$
		V_{DDP} - 0.4	–	–	V	$I_{OH} \geq I_{OHnom}$ [7]
Output Low Voltage[6]	V_{OL} CC	–	–	0.4	V	$I_{OL} \leq I_{OLnom}$ [8]
		–	–	1.0	V	$I_{OL} \leq I_{OLmax}$

1) Not subject to production test - verified by design/characterization. Hysteresis is implemented to avoid metastable states and switching due to internal ground bounce. It cannot suppress switching due to external system noise under all conditions.

2) If the input voltage exceeds the respective supply voltage due to ground bouncing ($V_{IN} < V_{SS}$) or supply ripple ($V_{IN} > V_{DDP}$), a certain amount of current may flow through the protection diodes. This current adds to the leakage current. An additional error current (I_{INJ}) will flow if an overload current flows through an adjacent pin. Please refer to the definition of the overload coupling factor K_{OV}.

3) The given values are worst-case values. In production test, this leakage current is only tested at 125 °C; other values are ensured by correlation. For derating, please refer to the following descriptions: Leakage derating depending on temperature (T_J = junction temperature [°C]): I_{OZ} = 0.05 x $e^{(1.5 + 0.028 \times TJ>)}$ [µA]. For example, at a temperature of 95 °C the resulting leakage current is 3.2 µA. Leakage derating depending on voltage level (DV = V_{DDP} - V_{PIN} [V]): I_{OZ} = $I_{OZtempmax}$ - (1.6 x DV) (µA). This voltage derating formula is an approximation which applies for maximum temperature.

4) Drive the indicated minimum current through this pin to change the default pin level driven by the enabled pull device.

5) Limit the current through this pin to the indicated value so that the enabled pull device can keep the default pin level.

6) The maximum deliverable output current of a port driver depends on the selected output driver mode. This specification is not valid for outputs which are switched to open drain mode. In this case the respective output will float and the voltage is determined by the external circuit.

7) As a rule, with decreasing output current the output levels approach the respective supply level (VOL->VSS, VOH->VDDP). However, only the levels for nominal output currents are verified.

8) As a rule, with decreasing output current the output levels approach the respective supply level (V_{OL}->V_{SS}, V_{OH}->V_{DDP}). However, only the levels for nominal output currents are verified.

4.3.3 Power Consumption

The power consumed by the XE161FU depends on several factors such as supply voltage, operating frequency, active circuits, and operating temperature. The power consumption specified here consists of two components:

- The switching current I_S depends on the device activity
- The leakage current I_{LK} depends on the device temperature

To determine the actual power consumption, always both components, switching current I_S and leakage current I_{LK} must be added:

$I_{DDP} = I_S + I_{LK}$.

Note: The power consumption values are not subject to production test. They are verified by design/characterization.
To determine the total power consumption for dimensioning the external power supply, also the pad driver currents must be considered.

The given power consumption parameters and their values refer to specific operating conditions:

- **Active mode**:
  Regular operation, i.e. peripherals are active, code execution out of Flash.
- **Stopover mode**:
  Crystal oscillator and PLL stopped, Flash switched off, clock in most parts of domain DMP_M stopped.

Note: The maximum values cover the complete specified operating range of all manufactured devices.
The typical values refer to average devices under typical conditions, such as nominal supply voltage, room temperature, application-oriented activity.
After a power reset, the decoupling capacitors for V_{DDIM} are charged with the maximum possible current.

For additional information, please refer to **Section 5.2**, **Thermal Considerations**.

Note: Operating Conditions apply.

Table 18 Switching Power Consumption

Parameter	Symbol	Values			Unit	Note / Test Condition
		Min.	Typ.	Max.		
Power supply current (active) with all peripherals active and EVVRs on	I_{SACT} CC	–	5.5 + 0.4 x f_{SYS} [1]	7 + 0.6 x f_{SYS} [1]	mA	power_mode= active ; voltage_range= both [2][3][4]
Power supply current in stopover mode, EVVRs on	I_{SSO} CC	–	0.7	2.0	mA	power_mode= stopover ; voltage_range= both

1) f_{SYS} in MHz

2) The pad supply voltage pins (V_{DDPB}) provide the input current for the on-chip EVVRs and the current consumed by the pin output drivers. A small current is consumed because the drivers input stages are switched.

3) Please consider the additional conditions described in section "Active Mode Power Supply Current".

4) The pad supply voltage only has a minor influence on this parameter.

Active Mode Power Supply Current

The actual power supply current in active mode not only depends on the system frequency but also on the configuration of the XE161FU's subsystem.

Besides the power consumed by the device logic the power supply pins also provide the current that flows through the pin output drivers.
A small current is consumed because the drivers' input stages are switched.

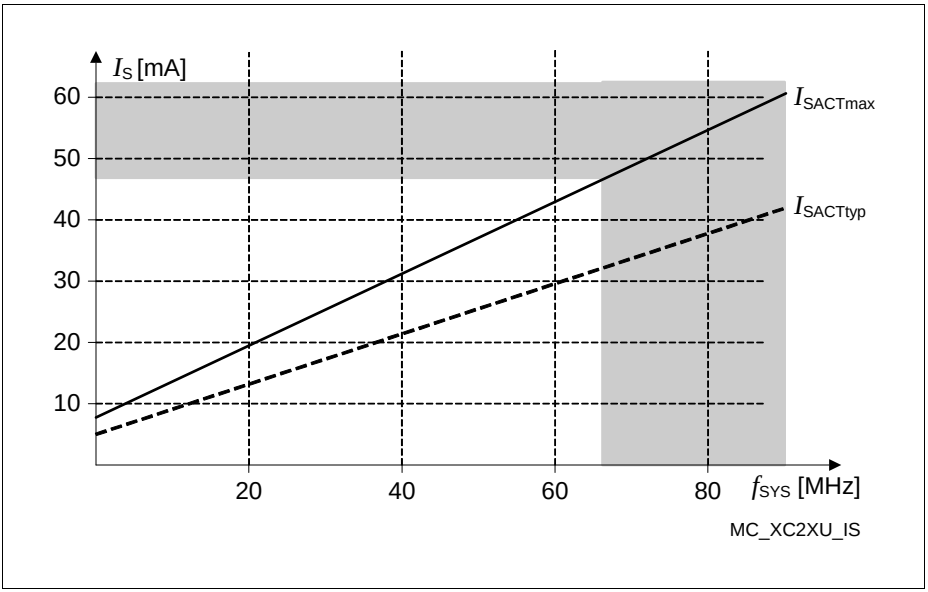

Figure 12 Supply Current in Active Mode as a Function of Frequency

Note: Operating Conditions apply.

Table 19 Leakage Power Consumption

Parameter	Symbol	Values			Unit	Note / Test Condition
		Min.	Typ.	Max.		
Leakage supply current[1)2)]	I_{LK1} CC	–	0.03	0.04	mA	T_J= 25 °C
		–	0.4	0.95	mA	T_J= 85 °C
		–	1.5	4.6	mA	T_J= 125 °C
		–	3.3	10.1	mA	T_J= 150 °C

1) The supply current caused by leakage depends mainly on the junction temperature and the supply voltage. The temperature difference between the junction temperature T_J and the ambient temperature T_A must be taken into account. As this fraction of the supply current does not depend on device activity, it must be added to other power consumption values.

2) All inputs (including pins configured as inputs) are set at 0 V to 0.1 V or at V_{DDP} - 0.1 V to V_{DDP} and all outputs (including pins configured as outputs) are disconnected.

Leakage Power Consumption Calculation

The leakage power consumption can be calculated according to the following formulas:

$I_{LK1} = 440{,}000 + e^{-\alpha}$ with $\alpha = 5000 / (273 + B \times T_J)$

Parameter B must be replaced by

- 1.0 for typical values
- 1.3 for maximum values

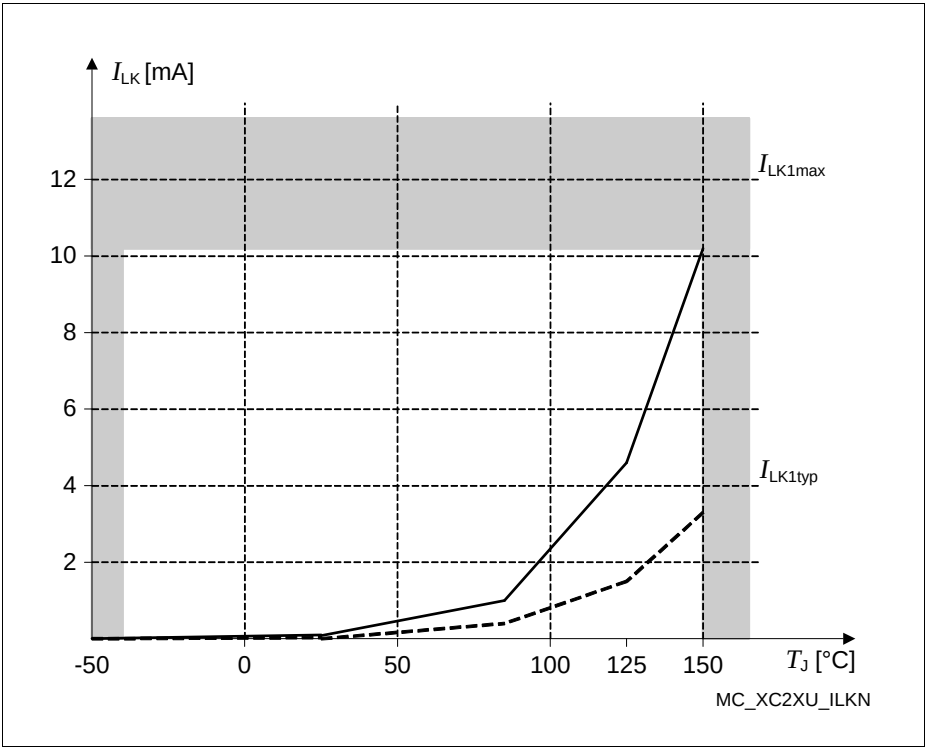

Figure 13 Leakage Supply Current as a Function of Temperature

4.4 Analog/Digital Converter Parameters

These parameters describe the conditions for optimum ADC performance.

Note: Operating Conditions apply.

Table 20 ADC Parameters for All Voltage Ranges

Parameter	Symbol	Values			Unit	Note / Test Condition
		Min.	Typ.	Max.		
Switched capacitance at an analog input	C_{AINSW} CC	–	9	20	pF	not subject to production test [1]
Total capacitance at an analog input	C_{AINT} CC	–	20	30	pF	not subject to production test [1]
Switched capacitance at the reference input	C_{AREFSW} CC	–	15	30	pF	not subject to production test [1]
Total capacitance at the reference input	C_{AREFT} CC	–	20	40	pF	not subject to production test [1]
Broken wire detection delay against VAGND[2]	t_{BWG} CC	–	–	50[3]		
Broken wire detection delay against VAREF[2]	t_{BWR} CC	–	–	50[4]		
Conversion time for 8-bit result[2]	t_{c8} CC	(10 + STC x t_{ADCI} + 2 x t_{SYS}				
Conversion time for 10-bit result[2]	t_{c10} CC	(12 + STC x t_{ADCI} + 2 x t_{SYS}				
Conversion time for 12-bit result[2]	t_{c12} CC	(16 + STC x t_{ADCI} + 2 x t_{SYS}				
Analog reference ground	V_{AGND} SR	V_{SS} - 0.05	–	1.5	V	
Analog input voltage range	V_{AIN} SR	V_{AGND}	–	V_{AREF}	V	[5]
Analog reference voltage	V_{AREF} SR	V_{AGND} + 1.0	–	V_{DDPB} + 0.05	V	

1) These parameter values cover the complete operating range. Under relaxed operating conditions (temperature, supply voltage) typical values can be used for calculation.

2) This parameter includes the sample time (also the additional sample time specified by STC), the time to determine the digital result and the time to load the result register with the conversion result. Values for the basic clock t_{ADCI} depend on programming.

3) The broken wire detection delay against V_{AGND} is measured in numbers of consecutive precharge cycles at a conversion rate of not more than 500 µs. Result below 10% (66_H)

4) The broken wire detection delay against V_{AREF} is measured in numbers of consecutive precharge cycles at a conversion rate of not more than 10 µs. This function is influenced by leakage current, in particular at high temperature. Result above 80% (332_H)

5) V_{AIN} may exceed V_{AGND} or V_{AREF} up to the absolute maximum ratings. However, the conversion result in these cases will be $X000_H$ or $X3FF_H$, respectively.

Table 21 ADC Parameters for Upper Voltage Range

Parameter	Symbol	Values			Unit	Note / Test Condition
		Min.	Typ.	Max.		
Input resistance of the selected analog channel	R_{AIN} CC	–	0.9	1.5	kOhm	not subject to production test 1)
Input resistance of the reference input	R_{AREF} CC	–	0.5	1	kOhm	not subject to production test 1)
Differential Non-Linearity Error 2)3)4)5)	$\|EA_{DNL}\|$ CC	–	2.5	5.0	LSB	
Gain Error 2)3)4)5)	$\|EA_{GAIN}\|$ CC	–	2.5	6.0	LSB	
Integral Non-Linearity 2)3)4)5)	$\|EA_{INL}\|$ CC	–	2.0	4.0	LSB	
Offset Error 2)3)4)5)	$\|EA_{OFF}\|$ CC	–	2.0	4.0	LSB	
Analog clock frequency	f_{ADCI} SR	2	–	20	MHz	Std. reference input (V_{AREF})
		2	–	17.5	MHz	Alt. reference input (CH0)
Total Unadjusted Error 3)4)	|TUE| CC	–	2.5	5.5	LSB	6)7)
Wakeup time from analog powerdown, fast mode	t_{WAF} CC	–	–	7.0	µs	
Wakeup time from analog powerdown, slow mode	t_{WAS} CC	–	–	11.5	µs	

1) These parameter values cover the complete operating range. Under relaxed operating conditions (temperature, supply voltage) typical values can be used for calculation.
2) The sum of DNL/INL/GAIN/OFF errors does not exceed the related TUE total unadjusted error.
3) If a reduced analog reference voltage between 1V and V_{DDPB} / 2 is used, then there are additional decrease in the ADC speed and accuracy.
4) If the analog reference voltage range is below V_{DDPB} but still in the defined range of V_{DDPB} / 2 and V_{DDPB} is used, then the ADC converter errors increase. If the reference voltage is reduced by the factor k (k<1), TUE, DNL, INL, Gain and Offset errors increase also by the factor 1/k.
5) If the analog reference voltage is > V_{DDPB}, then the ADC converter errors increase.
6) TUE is based on 12-bit conversion.
7) TUE is tested at V_{AREF} = V_{DDPB} = 5.0 V, V_{AGND} = 0 V. It is verified by design for all other voltages within the defined voltage range. The specified TUE is valid only if the absolute sum of input overload currents on analog port pins (see I_{OV} specification) does not exceed 10 mA, and if V_{AREF} and V_{AGND} remain stable during the measurement time.

Table 22 ADC Parameters for Lower Voltage Range

Parameter	Symbol	Values			Unit	Note / Test Condition
		Min.	Typ.	Max.		
Input resistance of the selected analog channel	R_{AIN} CC	–	1.4	2.5	kOhm	not subject to production test 1)
Input resistance of the reference input	R_{AREF} CC	–	1.0	2.0	kOhm	not subject to production test 1)
Differential Non-Linearity Error 2)3)4)5)	$\|EA_{DNL}\|$ CC	–	2.5	5.5	LSB	
Gain Error 2)3)4)5)	$\|EA_{GAIN}\|$ CC	–	3.0	8.0	LSB	
Integral Non-Linearity 2)3)4)5)	$\|EA_{INL}\|$ CC	–	2.5	7.5	LSB	
Offset Error 2)3)4)5)	$\|EA_{OFF}\|$ CC	–	2.0	5.5	LSB	
Analog clock frequency	f_{ADCI} SR	2	–	16.7	MHz	Std. reference input (V_{AREF})
		2	–	12.1	MHz	Alt. reference input (CH0)
Total Unadjusted Error 3)4)	|TUE| CC	–	2.5	7.5	LSB	6)7)

Table 22 ADC Parameters for Lower Voltage Range (cont'd)

Parameter	Symbol	Values			Unit	Note / Test Condition
		Min.	Typ.	Max.		
Wakeup time from analog powerdown, fast mode	t_{WAF} CC	–	–	8.5	µs	
Wakeup time from analog powerdown, slow mode	t_{WAS} CC	–	–	15.0	µs	

1) These parameter values cover the complete operating range. Under relaxed operating conditions (temperature, supply voltage) typical values can be used for calculation.
2) The sum of DNL/INL/GAIN/OFF errors does not exceed the related TUE total unadjusted error.
3) If a reduced analog reference voltage between 1V and V_{DDPB} / 2 is used, then there are additional decrease in the ADC speed and accuracy.
4) If the analog reference voltage range is below V_{DDPB} but still in the defined range of V_{DDPB} / 2 and V_{DDPB} is used, then the ADC converter errors increase. If the reference voltage is reduced by the factor k (k<1), TUE, DNL, INL, Gain and Offset errors increase also by the factor 1/k.
5) If the analog reference voltage is > V_{DDPB}, then the ADC converter errors increase.
6) TUE is based on 12-bit conversion.
7) TUE is tested at V_{AREF} = V_{DDPB} = 3.3 V, V_{AGND} = 0 V. It is verified by design for all other voltages within the defined voltage range. The specified TUE is valid only if the absolute sum of input overload currents on analog port pins (see I_{OV} specification) does not exceed 10 mA, and if V_{AREF} and V_{AGND} remain stable during the measurement time.

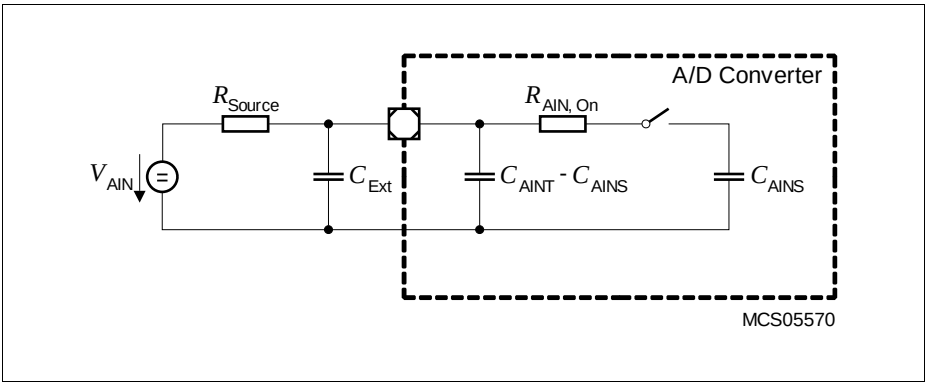

Figure 14 Equivalent Circuitry for Analog Inputs

Sample time and conversion time of the XE161FU's A/D converters are programmable. The timing above can be calculated using **Table 23**.
The limit values for f_{ADCI} must not be exceeded when selecting the prescaler value.

Table 23 A/D Converter Computation Table

GLOBCTR.5-0 (DIVA)	A/D Converter Analog Clock f_{ADCI}	INPCRx.7-0 (STC)	Sample Time[1] t_S
000000_B	f_{SYS}	00_H	$t_{ADCI} \times 2$
000001_B	f_{SYS} / 2	01_H	$t_{ADCI} \times 3$
000010_B	f_{SYS} / 3	02_H	$t_{ADCI} \times 4$
:	f_{SYS} / (DIVA+1)	:	$t_{ADCI} \times$ (STC+2)
111110_B	f_{SYS} / 63	FE_H	$t_{ADCI} \times 256$
111111_B	f_{SYS} / 64	FF_H	$t_{ADCI} \times 257$

1) The selected sample time is doubled if broken wire detection is active (due to the presampling phase).

Converter Timing Example A:

Assumptions: f_{SYS} = 66 MHz (i.e. t_{SYS} = 15.2 ns), DIVA = 03_H, STC = 00_H
Analog clock f_{ADCI} = f_{SYS} / 4 = 16.5 MHz, i.e. t_{ADCI} = 60.6 ns
Sample time t_S = $t_{ADCI} \times 2$ = 121.2 ns

Conversion 12-bit:

$t_{C12} = 16 \times t_{ADCI} + 2 \times t_{SYS} = 16 \times 60.6\text{ ns} + 2 \times 15.2\text{ ns} = 1.0\ \mu s$

Conversion 10-bit:

$t_{C10} = 12 \times t_{ADCI} + 2 \times t_{SYS} = 12 \times 60.6\text{ ns} + 2 \times 15.2\text{ ns} = 0.758\ \mu s$

Conversion 8-bit:

$t_{C8} = 10 \times t_{ADCI} + 2 \times t_{SYS} = 10 \times 60.6\text{ ns} + 2 \times 15.2\text{ ns} = 0.636\ \mu s$

Converter Timing Example B:

Assumptions: f_{SYS} = 40 MHz (i.e. t_{SYS} = 25 ns), DIVA = 01_H, STC = 00_H
Analog clock f_{ADCI} = f_{SYS} / 2 = 20 MHz, i.e. t_{ADCI} = 50 ns
Sample time t_S = $t_{ADCI} \times 2$ = 100 ns

Conversion 12-bit:

$t_{C12} = 16 \times t_{ADCI} + 2 \times t_{SYS} = 16 \times 50\text{ ns} + 2 \times 25\text{ ns} = 0.85\ \mu s$

Conversion 10-bit:

$t_{C10} = 12 \times t_{ADCI} + 2 \times t_{SYS} = 12 \times 50\text{ ns} + 2 \times 25\text{ ns} = 0.65\ \mu s$

Conversion 8-bit:

$$t_{C8} = 10 \times t_{ADCI} + 2 \times t_{SYS} = 10 \times 50\ ns + 2 \times 25\ ns = 0.55\ \mu s$$

4.5 System Parameters

The following parameters specify several aspects which are important when integrating the XE161FU into an application system.

Note: These parameters are not subject to production test but verified by design and/or characterization.

Note: Operating Conditions apply.

Table 24 Various System Parameters

Parameter	Symbol	Values			Unit	Note / Test Condition
		Min.	Typ.	Max.		
Short-term deviation of internal clock source frequency[1]	Δf_{INT} CC	-1	–	1	%	ΔT_J = ≤ 10°C
Internal clock source frequency	f_{INT} CC	4.8	5.0	5.2	MHz	
Wakeup clock source frequency[2]	f_{WU} CC	400	–	700	kHz	FREQSEL= 00
		210	–	390	kHz	FREQSEL= 01
		140	–	260	kHz	FREQSEL= 10
		110	–	200	kHz	FREQSEL= 11
Startup time from power-on with code execution from Flash	t_{SPO} CC	1.4	1.9	2.4	ms	f_{WU} = 500 kHz
Startup time from stopover mode with code execution from PSRAM	t_{SSO} CC	11 / f_{WU}[3]	–	12 / f_{WU}[3]	µs	
Core voltage (PVC) supervision level	V_{PVC} CC	V_{LV} - 0.03	V_{LV}	V_{LV} + 0.07[4]	V	[5]
Supply watchdog (SWD) supervision level	V_{SWD} CC	V_{LV} - 0.10[6]	V_{LV}	V_{LV} + 0.15	V	voltage_range= lower [5]
		V_{LV} - 0.15	V_{LV}	V_{LV} + 0.15	V	voltage_range= upper [5]

1) The short-term frequency deviation refers to a timeframe of a few hours and is measured relative to the current frequency at the beginning of the respective timeframe. This parameter is useful to determine a time span for re-triggering a LIN synchronization.

2) This parameter is tested for the fastest and the slowest selection. The medium selections are not subject to production test - verified by design/characterization.

3) f_{WU} in MHz.

4) This value includes a hysteresis of approximately 50 mV for rising voltage.
5) V_{LV} = selected SWD voltage level
6) The limit V_{LV} - 0.10 V is valid for the OK1 level. The limit for the OK2 level is V_{LV} - 0.15 V.

Conditions for t_{SPO} Timing Measurement

The time required for the transition from **Power-On** to **Base** mode is called t_{SPO}. It is measured under the following conditions:

Precondition: The pad supply is valid, i.e. V_{DDPB} is above 3.0 V and remains above 3.0 V even though the XE161FU is starting up. No debugger is attached.

Start condition: Power on reset is removed ($\overline{\text{PORST}}$ = 1).

End condition: External pin toggle caused by first user instruction executed from Flash after startup.

Conditions for t_{SSO} Timing Measurement

The time required for the transition from **Stopover** to **Stopover Waked-Up** mode is called t_{SSO}. It is measured under the following conditions:

Precondition: The **Stopover** mode has been entered using the procedure defined in the Programmer's Guide.

Start condition: Pin toggle on $\overline{\text{ESR}}$ pin triggering the startup sequence.

End condition: External pin toggle caused by first user instruction executed from PSRAM after startup.

Coding of bit fields LEVxV in SWD Configuration Registers

After power-on the supply watch dog is preconfigured to operate in the lower voltage range.

Table 25 Coding of bit fields LEVxV in Register SWDCON0

Code	Default Voltage Level	Notes[1)]
0000_B	-	out of valid operation range
0001_B	3.0 V	LEV1V: reset request
0010_B - 0101_B	3.1 V - 3.4 V	step width is 0.1 V
0110_B	3.6 V	
0111_B	4.0 V	
1000_B	4.2 V	
1001_B	4.5 V	LEV2V: no request
1010_B - 1110_B	4.6 V - 5.0 V	step width is 0.1 V
1111_B	5.5 V	

1) The indicated default levels are selected automatically after a power reset.

Coding of bit fields LEVxV in PVC Configuration Registers

The core voltages are controlled internally to the nominal value of 1.5 V; a variation of ±10 % is allowed. These operation conditions limit the possible PVC monitoring values to the predefined reset values shown in **Table 26**.

Table 26 Coding of bit fields LEVxV in Registers PVCyCONz

Code	Default Voltage Level	Notes[1)]
000_B - 011_B	-	out of valid operation range
100_B	1.35 V	LEV1V: reset request
101_B	1.45 V	LEV2V: interrupt request[2)]
110_B - 111_B	-	out of valid operation range

1) The indicated default levels are selected automatically after a power reset.

2) Due to variations of the tolerance of both the Embedded Voltage Regulators (EVR) and PVC levels, this interrupt can be triggered inadvertently, even though the core voltage is within the normal range. It is, therefore, recommended not to use this warning level.

4.6 Flash Memory Parameters

The XE161FU is delivered with all Flash sectors erased and with no protection installed.

The data retention time of the XE161FU's Flash memory (i.e. the time after which stored data can still be retrieved) depends on the number of times the Flash memory has been erased and programmed.

Note: These parameters are not subject to production test but verified by design and/or characterization.

Note: Operating Conditions apply.

Table 27 Flash Parameters

Parameter	Symbol	Values			Unit	Note / Test Condition
		Min.	Typ.	Max.		
Parallel Flash module program/erase limit depending on Flash read activity	N_{PP} SR	–	–	1[1)]		$N_{FL_RD} \leq 1$
Flash erase endurance for security pages	N_{SEC} SR	10	–	–	cycles	$t_{RET} \geq$ 20 years
Flash wait states[2)]	$N_{WSFLASH}$ SR	1	–	–		$f_{SYS} \leq$ 8 MHz
		2	–	–		$f_{SYS} \leq$ 13 MHz
		3	–	–		$f_{SYS} \leq$ 17 MHz
		4	–	–		$f_{SYS} >$ 17 MHz
Erase time per sector/page	t_{ER} CC	–	7[3)]	8.0	ms	
Programming time per page	t_{PR} CC	–	3[3)]	3.5	ms	
Data retention time	t_{RET} CC	20	–	–	years	$N_{ER} \leq$ 1,000 cycles
Drain disturb limit	N_{DD} SR	32	–	–	cycles	

Table 27 Flash Parameters (cont'd)

Parameter	Symbol	Values			Unit	Note / Test Condition
		Min.	Typ.	Max.		
Number of erase cycles	N_{ER} SR	–	–	15000	cycles	$t_{RET} \geq$ 5 years; Valid for up to 64 user selected sectors (data storage)
		–	–	1000	cycles	$t_{RET} \geq$ 20 years

1) All Flash module(s) can be erased/programmed while code is executed and/or data is read from only one Flash module or from PSRAM. The Flash module that delivers code/data can, of course, not be erased/programmed.

2) Value of IMB_IMBCTRL.WSFLASH.

3) Programming and erase times depend on the internal Flash clock source. The control state machine needs a few system clock cycles. This increases the stated durations noticably only at extremely low system clock frequencies.

Access to the XE161FU Flash modules is controlled by the IMB. Built-in prefetch mechanisms optimize the performance for sequential access.

Flash access waitstates only affect non-sequential access. Due to prefetch mechanisms, the performance for sequential access (depending on the software structure) is only partially influenced by waitstates.

4.7 AC Parameters

These parameters describe the dynamic behavior of the XE161FU.

4.7.1 Testing Waveforms

These values are used for characterization and production testing (except pin XTAL1).

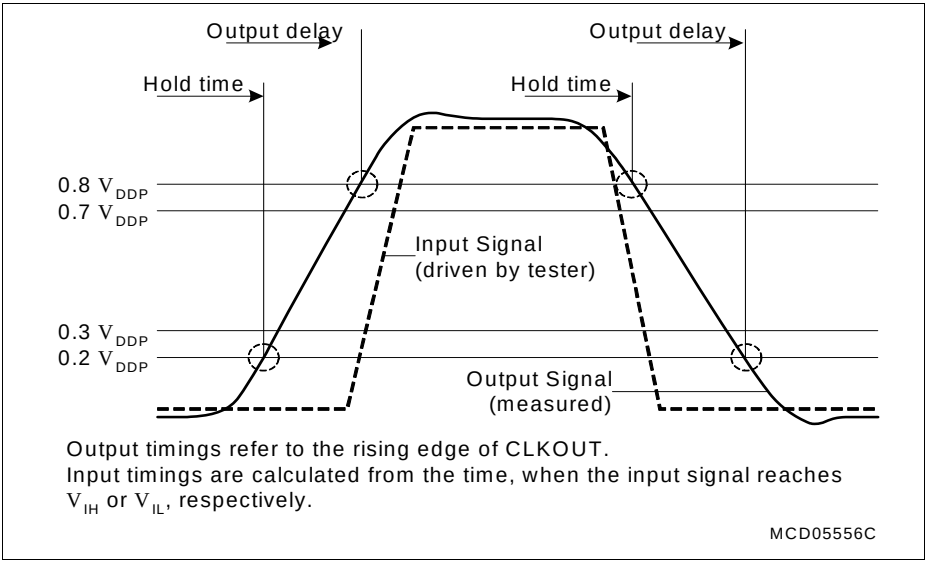

Figure 15 Input Output Waveforms

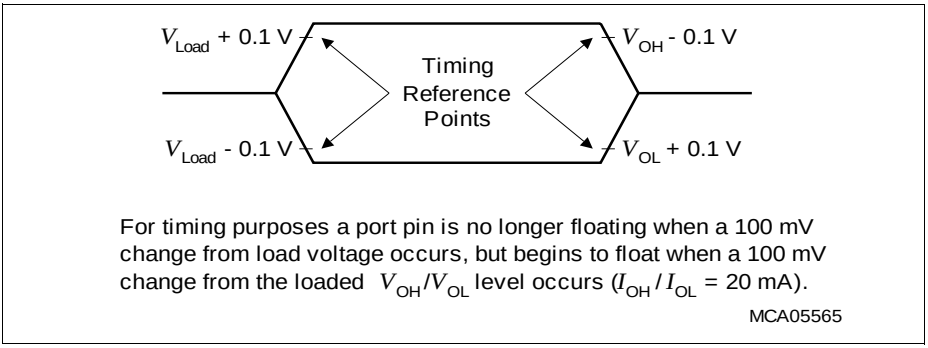

Figure 16 Floating Waveforms

4.7.2 Definition of Internal Timing

The internal operation of the XE161FU is controlled by the internal system clock f_{SYS}.

Because the system clock signal f_{SYS} can be generated from a number of internal and external sources using different mechanisms, the duration of the system clock periods (TCSs) and their variation (as well as the derived external timing) depend on the mechanism used to generate f_{SYS}. This must be considered when calculating the timing for the XE161FU.

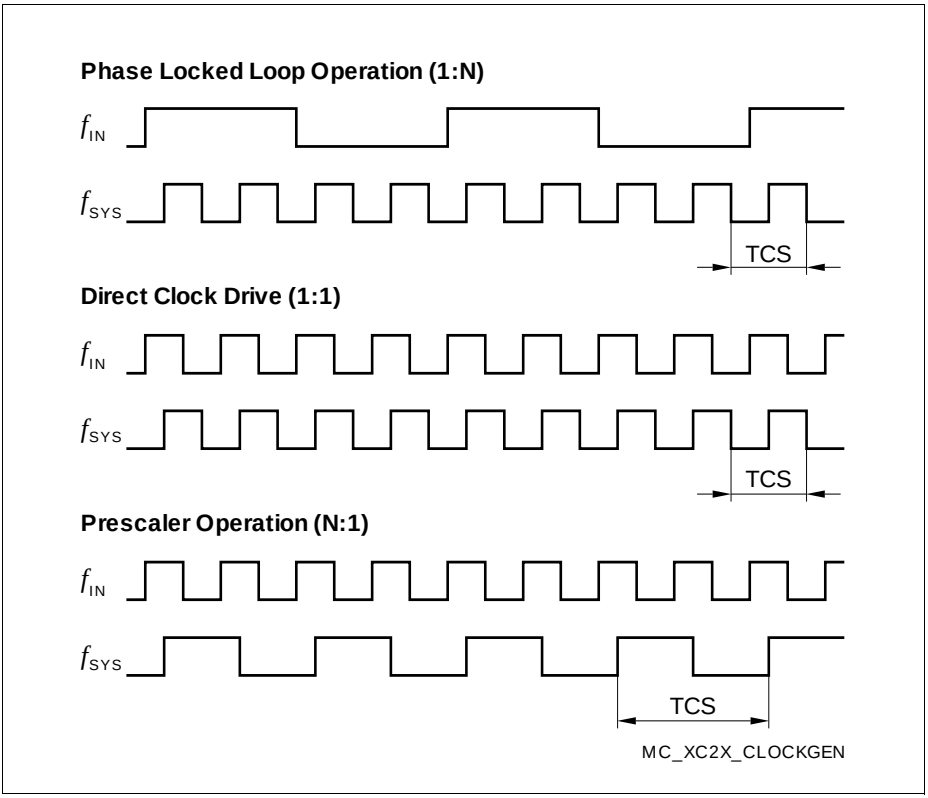

Figure 17 Generation Mechanisms for the System Clock

*Note: The example of PLL operation shown in **Figure 17** uses a PLL factor of 1:4; the example of prescaler operation uses a divider factor of 2:1.*

The specification of the external timing (AC Characteristics) depends on the period of the system clock (TCS).

Direct Drive

When direct drive operation is selected (SYSCON0.CLKSEL = 11_B), the system clock is derived directly from the input clock signal CLKIN1:

$f_{SYS} = f_{IN}$.

The frequency of f_{SYS} is the same as the frequency of f_{IN}. In this case the high and low times of f_{SYS} are determined by the duty cycle of the input clock f_{IN}.

Selecting Bypass Operation from the XTAL1[1)] input and using a divider factor of 1 results in a similar configuration.

Prescaler Operation

When prescaler operation is selected (SYSCON0.CLKSEL = 10_B, PLLCON0.VCOBY = 1_B), the system clock is derived either from the crystal oscillator (input clock signal XTAL1) or from the internal clock source through the output prescaler K1 (= K1DIV+1):

$f_{SYS} = f_{OSC}$ / K1.

If a divider factor of 1 is selected, the frequency of f_{SYS} equals the frequency of f_{OSC}. In this case the high and low times of f_{SYS} are determined by the duty cycle of the input clock f_{OSC} (external or internal).

The lowest system clock frequency results from selecting the maximum value for the divider factor K1:

$f_{SYS} = f_{OSC}$ / 1024.

4.7.2.1 Phase Locked Loop (PLL)

When PLL operation is selected (SYSCON0.CLKSEL = 10_B, PLLCON0.VCOBY = 0_B), the on-chip phase locked loop is enabled and provides the system clock. The PLL multiplies the input frequency by the factor **F** ($f_{SYS} = f_{IN} \times$ **F**).
F is calculated from the input divider P (= PDIV+1), the multiplication factor N (= NDIV+1), and the output divider K2 (= K2DIV+1):
(**F** = N / (P $\times$ K2)).

The input clock can be derived either from an external source at XTAL1 or from the on-chip clock source.

The PLL circuit synchronizes the system clock to the input clock. This synchronization is performed smoothly so that the system clock frequency does not change abruptly.

Adjustment to the input clock continuously changes the frequency of f_{SYS} so that it is locked to f_{IN}. The slight variation causes a jitter of f_{SYS} which in turn affects the duration of individual TCSs.

1) Voltages on XTAL1 must comply to the core supply voltage V_{DDIM}.

The timing in the AC Characteristics refers to TCSs. Timing must be calculated using the minimum TCS possible under the given circumstances.
The actual minimum value for TCS depends on the jitter of the PLL. Because the PLL is constantly adjusting its output frequency to correspond to the input frequency (from crystal or oscillator), the accumulated jitter is limited. This means that the relative deviation for periods of more than one TCS is lower than for a single TCS (see formulas and **Figure 18**).

This is especially important for bus cycles using waitstates and for the operation of timers, serial interfaces, etc. For all slower operations and longer periods (e.g. pulse train generation or measurement, lower baudrates, etc.) the deviation caused by the PLL jitter is negligible.

The value of the accumulated PLL jitter depends on the number of consecutive VCO output cycles within the respective timeframe. The VCO output clock is divided by the output prescaler K2 to generate the system clock signal f_{SYS}. The number of VCO cycles is K2 × **T**, where **T** is the number of consecutive f_{SYS} cycles (TCS).

The maximum accumulated jitter (long-term jitter) D_{Tmax} is defined by:

D_{Tmax} [ns] = ±(220 / (K2 × f_{SYS}) + 4.3)

This maximum value is applicable, if either the number of clock cycles T > (f_{SYS} / 1.2) or the prescaler value K2 > 17.

In all other cases for a timeframe of **T** × TCS the accumulated jitter D_T is determined by:

D_T [ns] = D_{Tmax} × [(1 - 0.058 × K2) × (T - 1) / (0.83 × f_{SYS} - 1) + 0.058 × K2]

f_{SYS} in [MHz] in all formulas.

Example, for a period of 3 TCSs @ 33 MHz and K2 = 4:

D_{max} = ±(220 / (4 × 33) + 4.3) = 5.97 ns (Not applicable directly in this case!)

D_3 = 5.97 × [(1 - 0.058 × 4) × (3 - 1) / (0.83 × 33 - 1) + 0.058 × 4]
= 5.97 × [0.768 × 2 / 26.39 + 0.232]
= 1.7 ns

Example, for a period of 3 TCSs @ 33 MHz and K2 = 2:

D_{max} = ±(220 / (2 × 33) + 4.3) = 7.63 ns (Not applicable directly in this case!)

D_3 = 7.63 × [(1 - 0.058 × 2) × (3 - 1) / (0.83 × 33 - 1) + 0.058 × 2]
= 7.63 × [0.884 × 2 / 26.39 + 0.116]
= 1.4 ns

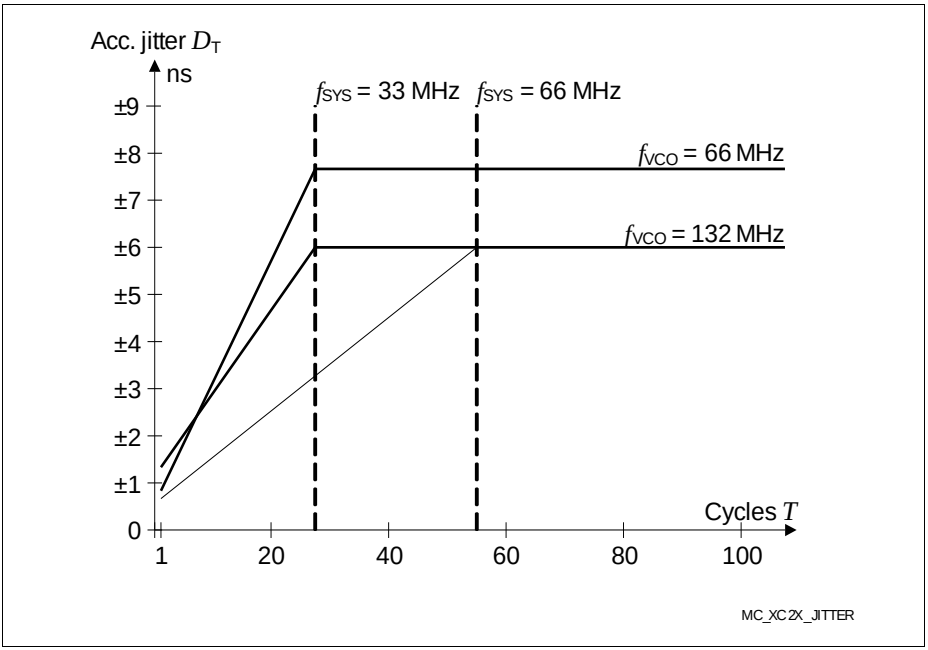

Figure 18 Approximated Accumulated PLL Jitter

Note: The specified PLL jitter values are valid if the capacitive load per pin does not exceed C_L = 20 pF.
The maximum peak-to-peak noise on the pad supply voltage (measured between V_{DDPB} pin and V_{SS} pin) is limited to a peak-to-peak voltage of V_{PP} = 50 mV. This can be achieved by appropriate blocking of the supply voltage as close as possible to the supply pins and using PCB supply and ground planes.

PLL frequency band selection

Different frequency bands can be selected for the VCO so that the operation of the PLL can be adjusted to a wide range of input and output frequencies:

Table 28 System PLL Parameters

Parameter	Symbol	Values			Unit	Note / Test Condition
		Min.	Typ.	Max.		
VCO output frequency	f_{VCO} CC	50	–	110	MHz	*VCOSEL*= 00_B; *VCOmode*= controlled
		10	–	40	MHz	*VCOSEL*= 00_B; *VCOmode*= free running
		100	–	160	MHz	*VCOSEL*= 01_B; *VCOmode*= controlled
		20	–	80	MHz	*VCOSEL*= 01_B; *VCOmode*= free running

4.7.2.2 Wakeup Clock

When wakeup operation is selected (SYSCON0.CLKSEL = 00_B), the system clock is derived from the low-frequency wakeup clock source:

$f_{SYS} = f_{WU}$.

In this mode, a basic functionality can be maintained without requiring an external clock source and while minimizing the power consumption.

4.7.2.3 Selecting and Changing the Operating Frequency

When selecting a clock source and the clock generation method, the required parameters must be carefully written to the respective bit fields, to avoid unintended intermediate states.

Many applications change the frequency of the system clock (f_{SYS}) during operation in order to optimize system performance and power consumption. Changing the operating frequency also changes the switching currents, which influences the power supply.

To ensure proper operation of the on-chip EVRs while they generate the core voltage, the operating frequency shall only be changed in certain steps. This prevents overshoots and undershoots of the supply voltage.

To avoid the indicated problems, recommended sequences are provided which ensure the intended operation of the clock system interacting with the power system.
Please refer to the Programmer's Guide.

4.7.3 External Clock Input Parameters

These parameters specify the external clock generation for the XE161FU. The clock can be generated in two ways:

- By connecting a **crystal or ceramic resonator** to pins XTAL1/XTAL2.
- By supplying an **external clock signal**. This clock signal can be supplied either to pin XTAL1 (core voltage domain) or to pin CLKIN1 (IO voltage domain).

If connected to CLKIN1, the input signal must reach the defined input levels V_{IL} and V_{IH}. If connected to XTAL1, a minimum amplitude V_{AX1} (peak-to-peak voltage) is sufficient for the operation of the on-chip oscillator.

Note: The given clock timing parameters (t_1 … t_4) are only valid for an external clock input signal.

Note: Operating Conditions apply.

Table 29 External Clock Input Characteristics

Parameter	Symbol	Values			Unit	Note / Test Condition
		Min.	Typ.	Max.		
Oscillator frequency	f_{OSC} SR	4	–	40	MHz	Input= Clock Signal
		4	–	16	MHz	Input= Crystal or Resonator
XTAL1 input current absolute value	$\|I_{IL}\|$ CC	–	–	20	µA	
Input clock high time	t_1 SR	6	–	–	ns	
Input clock low time	t_2 SR	6	–	–	ns	
Input clock rise time	t_3 SR	–	8	8	ns	
Input clock fall time	t_4 SR	–	8	8	ns	
Input voltage amplitude on XTAL1[1)]	V_{AX1} SR	0.3 x V_{DDIM}	–	–	V	f_{OSC}≥ 4 MHz; f_{OSC}≤ 16 MHz
		0.4 x V_{DDIM}	–	–	V	f_{OSC}≥ 16 MHz; f_{OSC}≤ 25 MHz
		0.5 x V_{DDIM}	–	–	V	f_{OSC}≥ 25 MHz; f_{OSC}≤ 40 MHz
Input voltage range limits for signal on XTAL1	V_{IX1} SR	-1.7 + V_{DDIM}	–	1.7	V	[2)]

1) The amplitude voltage V_{AX1} refers to the offset voltage V_{OFF}. This offset voltage must be stable during the operation and the resulting voltage peaks must remain within the limits defined by V_{IX1}.

2) Overload conditions must not occur on pin XTAL1.

Note: For crystal/resonator operation, it is strongly recommended to measure the oscillation allowance (negative resistance) in the final target system (layout) to determine the optimum parameters for oscillator operation.
The manufacturers of crystals and ceramic resonators offer an oscillator evaluation service. This evaluation checks the crystal/resonator specification limits to ensure a reliable oscillatior operation.

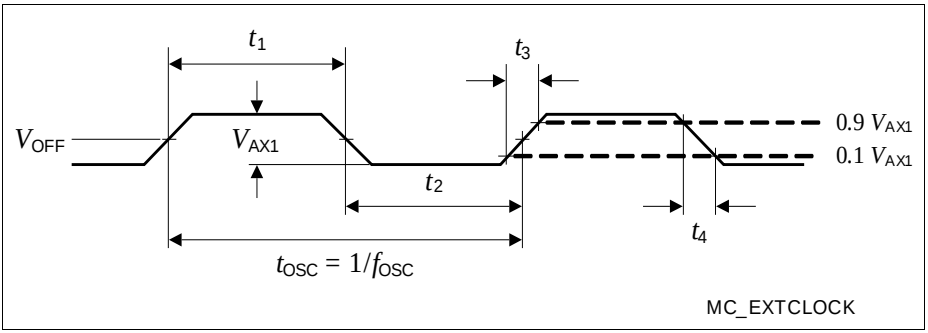

Figure 19 External Clock Drive XTAL1

4.7.4 Pad Properties

The output pad drivers of the XE161FU can operate in several user-selectable modes. Strong driver mode allows controlling external components requiring higher currents such as power bridges or LEDs. Reducing the driving power of an output pad reduces electromagnetic emissions (EME). In strong driver mode, selecting a slower edge reduces EME.

The dynamic behavior, i.e. the rise time and fall time, depends on the applied external capacitance that must be charged and discharged. Timing values are given for a capacitance of 20 pF, unless otherwise noted.

In general, the performance of a pad driver depends on the available supply voltage V_{DDP}. Therefore the following tables list the pad parameters for the upper voltage range and the lower voltage range, respectively.

Note: These parameters are not subject to production test but verified by design and/or characterization.

Note: Operating Conditions apply.

Table 30 is valid under the following conditions: $V_{DDP} \leq$ 5.5 V; V_{DDP}typ. 5 V; $V_{DDP} \geq$ 4.5 V

Table 30 Standard Pad Parameters for Upper Voltage Range

Parameter	Symbol	Values			Unit	Note / Test Condition
		Min.	Typ.	Max.		
Maximum output driver current (absolute value)[1)]	I_{Omax} CC	–	–	3.0	mA	Driver_Strength = Medium
		–	–	5.0	mA	Driver_Strength = Strong
		–	–	0.5	mA	Driver_Strength = Weak
Nominal output driver current (absolute value)	I_{Onom} CC	–	–	1.0	mA	Driver_Strength = Medium
		–	–	1.6	mA	Driver_Strength = Strong
		–	–	0.25	mA	Driver_Strength = Weak

Table 30 Standard Pad Parameters for Upper Voltage Range (cont'd)

Parameter	Symbol	Values			Unit	Note / Test Condition
		Min.	Typ.	Max.		
Rise and Fall times (10% - 90%)	t_{RF} CC	–	–	38 + 0.6 x C_L	ns	$C_L \geq$ 20 pF; $C_L \leq$ 100 pF; Driver_Strength = Medium
		–	–	1 + 0.45 x C_L	ns	$C_L \geq$ 20 pF; $C_L \leq$ 100 pF; Driver_Strength = Strong ; Driver_Edge= Soft
		–	–	16 + 0.45 x C_L	ns	$C_L \geq$ 20 pF; $C_L \leq$ 100 pF; Driver_Strength = Strong ; Driver_Edge= Slow
		–	–	200 + 2.5 x C_L	ns	$C_L \geq$ 20 pF; $C_L \leq$ 100 pF; Driver_Strength = Weak

1) The total output current that may be drawn at a given time must be limited to protect the supply rails from damage. For any group of 16 neighboring output pins, the total output current in each direction (ΣI_{OL} and ΣI_{OH}) must remain below 25 mA.

Table 31 Standard Pad Parameters for Lower Voltage Range

Parameter	Symbol	Values			Unit	Note / Test Condition
		Min.	Typ.	Max.		
Maximum output driver current (absolute value)[1)]	I_{Omax} CC	–	–	1.8	mA	Driver_Strength = Medium
		–	–	3.0	mA	Driver_Strength = Strong
		–	–	0.3	mA	Driver_Strength = Weak

Table 31 Standard Pad Parameters for Lower Voltage Range (cont'd)

Parameter	Symbol	Values			Unit	Note / Test Condition
		Min.	Typ.	Max.		
Nominal output driver current (absolute value)	I_{Onom} CC	–	–	0.8	mA	Driver_Strength = Medium
		–	–	1.0	mA	Driver_Strength = Strong
		–	–	0.15	mA	Driver_Strength = Weak
Rise and Fall times (10% - 90%)	t_{RF} CC	–	–	73 + 0.85 x C_L	ns	$C_L \geq$ 20 pF; $C_L \leq$ 100 pF; Driver_Strength = Medium
		–	–	6 + 0.6 x C_L	ns	$C_L \geq$ 20 pF; $C_L \leq$ 100 pF; Driver_Strength = Strong ; Driver_Edge= Soft
		–	–	33 + 0.6 x C_L	ns	$C_L \geq$ 20 pF; $C_L \leq$ 100 pF; Driver_Strength = Strong ; Driver_Edge= Slow
		–	–	385 + 3.25 x C_L	ns	$C_L \geq$ 20 pF; $C_L \leq$ 100 pF; Driver_Strength = Weak

1) The total output current that may be drawn at a given time must be limited to protect the supply rails from damage. For any group of 16 neighboring output pins, the total output current in each direction (ΣI_{OL} and ΣI_{OH}) must remain below 25 mA.

4.7.5 Synchronous Serial Interface Timing

The following parameters are applicable for a USIC channel operated in SSC mode.

Note: These parameters are not subject to production test but verified by design and/or characterization.

Note: Operating Conditions apply.

Table 32 is valid under the following conditions: C_L= 20 pF; SSC= master ; voltage_range= upper

Table 32 USIC SSC Master Mode Timing for Upper Voltage Range

Parameter	Symbol	Values			Unit	Note / Test Condition
		Min.	Typ.	Max.		
Slave select output SELO active to first SCLKOUT transmit edge	t_1 CC	t_{SYS} - 8[1)]	–	–	ns	
Slave select output SELO inactive after last SCLKOUT receive edge	t_2 CC	t_{SYS} - 6[1)]	–	–	ns	
Data output DOUT valid time	t_3 CC	-6	–	9	ns	
Receive data input setup time to SCLKOUT receive edge	t_4 SR	31	–	–	ns	
Data input DX0 hold time from SCLKOUT receive edge	t_5 SR	-4	–	–	ns	

1) $t_{SYS} = 1 / f_{SYS}$

Table 33 is valid under the following conditions: C_L= 20 pF; *SSC*= master ; voltage_range= lower

Table 33 USIC SSC Master Mode Timing for Lower Voltage Range

Parameter	Symbol	Values			Unit	Note / Test Condition
		Min.	Typ.	Max.		
Slave select output SELO active to first SCLKOUT transmit edge	t_1 CC	t_{SYS} - 10[1)]	–	–	ns	
Slave select output SELO inactive after last SCLKOUT receive edge	t_2 CC	t_{SYS} - 9[1)]	–	–	ns	
Data output DOUT valid time	t_3 CC	-7	–	11	ns	
Receive data input setup time to SCLKOUT receive edge	t_4 SR	40	–	–	ns	
Data input DX0 hold time from SCLKOUT receive edge	t_5 SR	-5	–	–	ns	

1) $t_{SYS} = 1 / f_{SYS}$

Table 34 is valid under the following conditions: C_L= 20 pF; *SSC*= slave ; voltage_range= upper

Table 34 USIC SSC Slave Mode Timing for Upper Voltage Range

Parameter	Symbol	Values			Unit	Note / Test Condition
		Min.	Typ.	Max.		
Select input DX2 setup to first clock input DX1 transmit edge[1)]	t_{10} SR	10	–	–	ns	
Select input DX2 hold after last clock input DX1 receive edge[1)]	t_{11} SR	7	–	–	ns	
Receive data input setup time to shift clock receive edge[1)]	t_{12} SR	7	–	–	ns	

Table 34 USIC SSC Slave Mode Timing for Upper Voltage Range (cont'd)

Parameter	Symbol	Values			Unit	Note / Test Condition
		Min.	Typ.	Max.		
Data input DX0 hold time from clock input DX1 receive edge[1)]	t_{13} SR	5	–	–	ns	
Data output DOUT valid time	t_{14} CC	7	–	33	ns	

1) These input timings are valid for asynchronous input signal handling of slave select input, shift clock input, and receive data input (bits DXnCR.DSEN = 0).

Table 35 is valid under the following conditions: C_L= 20 pF; *SSC*= slave ; voltage_range= lower

Table 35 USIC SSC Slave Mode Timing for Lower Voltage Range

Parameter	Symbol	Values			Unit	Note / Test Condition
		Min.	Typ.	Max.		
Select input DX2 setup to first clock input DX1 transmit edge[1)]	t_{10} SR	10	–	–	ns	
Select input DX2 hold after last clock input DX1 receive edge[1)]	t_{11} SR	7	–	–	ns	
Receive data input setup time to shift clock receive edge[1)]	t_{12} SR	7	–	–	ns	
Data input DX0 hold time from clock input DX1 receive edge[1)]	t_{13} SR	5	–	–	ns	
Data output DOUT valid time	t_{14} CC	8	–	41	ns	

1) These input timings are valid for asynchronous input signal handling of slave select input, shift clock input, and receive data input (bits DXnCR.DSEN = 0).

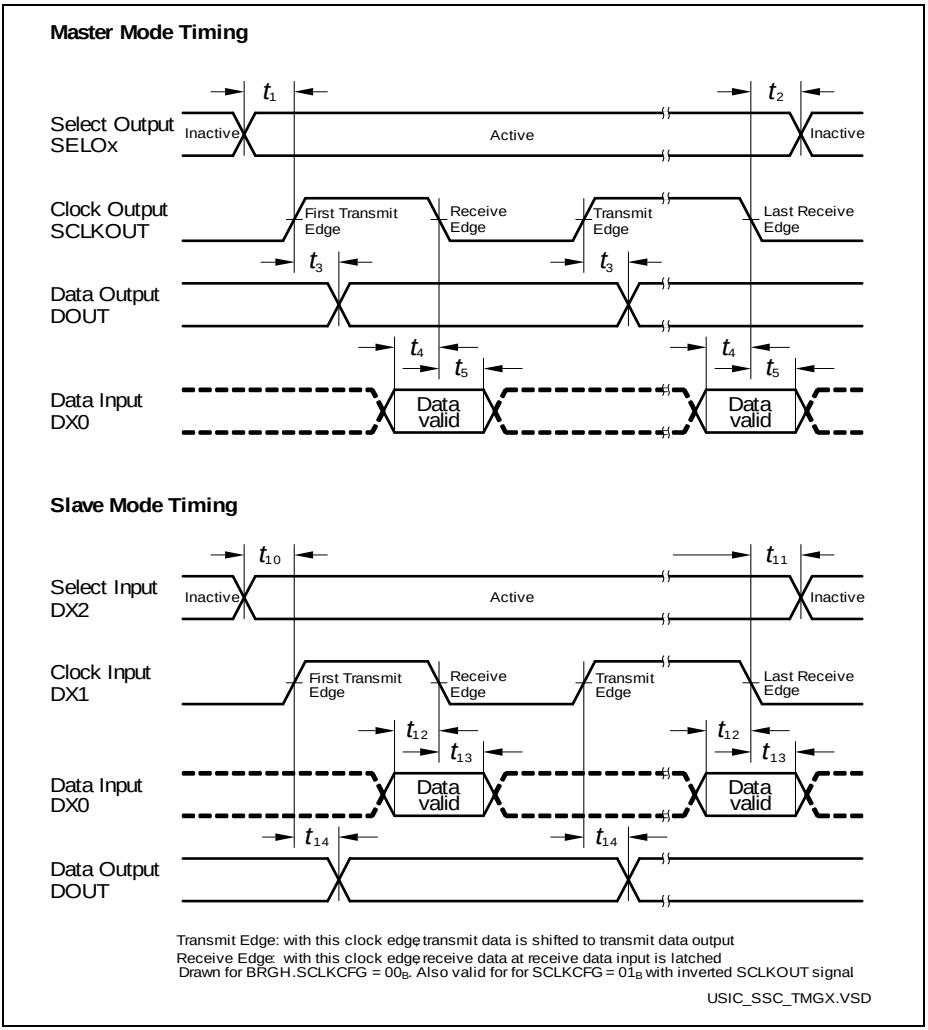

Figure 20 USIC - SSC Master/Slave Mode Timing

Note: This timing diagram shows a standard configuration where the slave select signal is low-active and the serial clock signal is not shifted and not inverted.

4.7.6 Debug Interface Timing

The debugger can communicate with the XE161FU via 1-pin SPD interface, via the 2-pin DAP interface or via the standard JTAG interface.

Debug via DAP

The following parameters are applicable for communication through the DAP debug interface.

Note: These parameters are not subject to production test but verified by design and/or characterization.

Note: Operating Conditions apply.

Table 36 is valid under the following conditions: C_L= 20 pF; voltage_range= upper

Table 36 DAP Interface Timing for Upper Voltage Range

Parameter	Symbol	Values			Unit	Note / Test Condition
		Min.	Typ.	Max.		
DAP0 clock period	t_{11} SR	100[1)]	–	–	ns	
DAP0 high time	t_{12} SR	8	–	–	ns	
DAP0 low time	t_{13} SR	8	–	–	ns	
DAP0 clock rise time	t_{14} SR	–	–	4	ns	
DAP0 clock fall time	t_{15} SR	–	–	4	ns	
DAP1 setup to DAP0 rising edge	t_{16} SR	6	–	–	ns	pad_type= standard
DAP1 hold after DAP0 rising edge	t_{17} SR	6	–	–	ns	pad_type= standard
DAP1 valid per DAP0 clock period[2)]	t_{19} CC	92	95	–	ns	pad_type= standard

1) The debug interface cannot operate faster than the overall system, therefore $t_{11} \geq t_{SYS}$.

2) The Host has to find a suitable sampling point by analyzing the sync telegram response.

Table 37 is valid under the following conditions: C_L= 20 pF; voltage_range= lower

Table 37 DAP Interface Timing for Lower Voltage Range

Parameter	Symbol	Values			Unit	Note / Test Condition
		Min.	Typ.	Max.		
DAP0 clock period	t_{11} SR	100[1)]	–	–	ns	
DAP0 high time	t_{12} SR	8	–	–	ns	
DAP0 low time	t_{13} SR	8	–	–	ns	
DAP0 clock rise time	t_{14} SR	–	–	4	ns	
DAP0 clock fall time	t_{15} SR	–	–	4	ns	
DAP1 setup to DAP0 rising edge	t_{16} SR	6	–	–	ns	pad_type= standard
DAP1 hold after DAP0 rising edge	t_{17} SR	6	–	–	ns	pad_type= standard
DAP1 valid per DAP0 clock period[2)]	t_{19} CC	87	92	–	ns	pad_type= standard

1) The debug interface cannot operate faster than the overall system, therefore $t_{11} \geq t_{SYS}$.

2) The Host has to find a suitable sampling point by analyzing the sync telegram response.

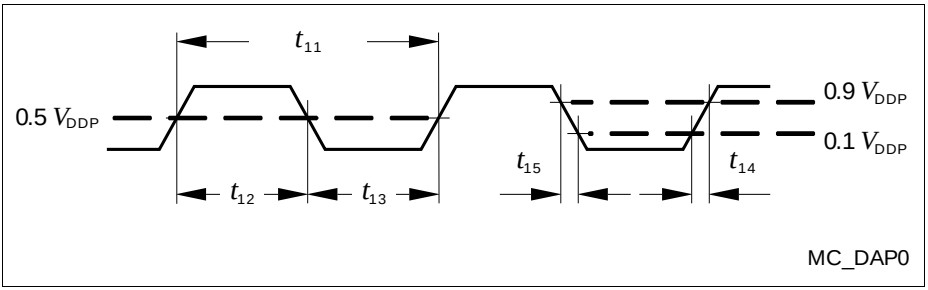

Figure 21 Test Clock Timing (DAP0)

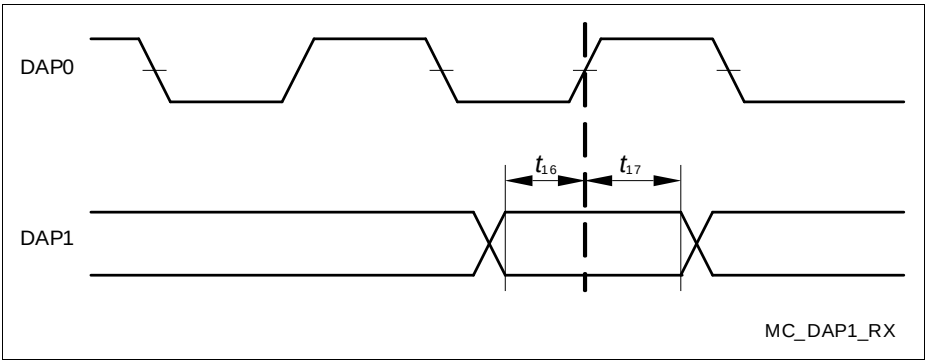

Figure 22 DAP Timing Host to Device

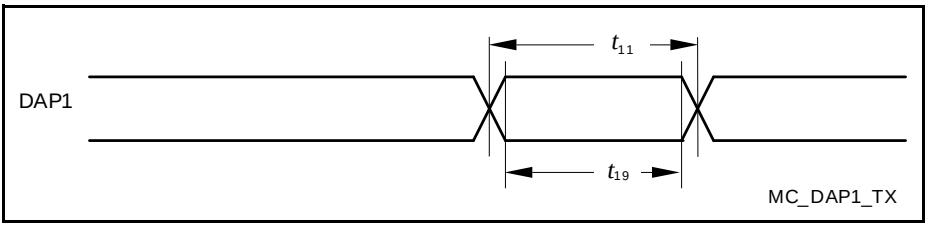

Figure 23 DAP Timing Device to Host

Note: The transmission timing is determined by the receiving debugger by evaluating the sync-request synchronization pattern telegram.

Debug via JTAG

The following parameters are applicable for communication through the JTAG debug interface. The JTAG module is fully compliant with IEEE1149.1-2000.

Note: These parameters are not subject to production test but verified by design and/or characterization.

Note: Operating Conditions apply.

Table 38 is valid under the following conditions: C_L= 20 pF; voltage_range= upper

Table 38 JTAG Interface Timing for Upper Voltage Range

Parameter	Symbol	Values			Unit	Note / Test Condition
		Min.	Typ.	Max.		
TCK clock period	t_1 SR	100[1]	–	–	ns	[2]
TCK high time	t_2 SR	16	–	–	ns	
TCK low time	t_3 SR	16	–	–	ns	
TCK clock rise time	t_4 SR	–	–	8	ns	
TCK clock fall time	t_5 SR	–	–	8	ns	
TDI/TMS setup to TCK rising edge	t_6 SR	6	–	–	ns	
TDI/TMS hold after TCK rising edge	t_7 SR	6	–	–	ns	
TDO valid from TCK falling edge (propagation delay)[3]	t_8 CC	–	29	32	ns	
TDO high impedance to valid output from TCK falling edge[4][3]	t_9 CC	–	29	32	ns	
TDO valid output to high impedance from TCK falling edge[3]	t_{10} CC	–	29	32	ns	
TDO hold after TCK falling edge[3]	t_{18} CC	5	–	–	ns	

1) The debug interface cannot operate faster than the overall system, therefore $t_1 \geq t_{SYS}$.

2) Under typical conditions, the JTAG interface can operate at transfer rates up to 10 MHz.

3) The falling edge on TCK is used to generate the TDO timing.

4) The setup time for TDO is given implicitly by the TCK cycle time.

Table 39 is valid under the following conditions: C_L= 20 pF; voltage_range= lower

Table 39 JTAG Interface Timing for Lower Voltage Range

Parameter	Symbol	Values			Unit	Note / Test Condition
		Min.	Typ.	Max.		
TCK clock period	t_1 SR	100[1]	–	–	ns	
TCK high time	t_2 SR	16	–	–	ns	
TCK low time	t_3 SR	16	–	–	ns	
TCK clock rise time	t_4 SR	–	–	8	ns	
TCK clock fall time	t_5 SR	–	–	8	ns	
TDI/TMS setup to TCK rising edge	t_6 SR	6	–	–	ns	
TDI/TMS hold after TCK rising edge	t_7 SR	6	–	–	ns	
TDO valid from TCK falling edge (propagation delay)[2]	t_8 CC	–	39	43	ns	
TDO high impedance to valid output from TCK falling edge[3][2]	t_9 CC	–	39	43	ns	
TDO valid output to high impedance from TCK falling edge[2]	t_{10} CC	–	39	43	ns	
TDO hold after TCK falling edge[2]	t_{18} CC	5	–	–	ns	

1) The debug interface cannot operate faster than the overall system, therefore $t_1 \geq t_{SYS}$.

2) The falling edge on TCK is used to generate the TDO timing.

3) The setup time for TDO is given implicitly by the TCK cycle time.

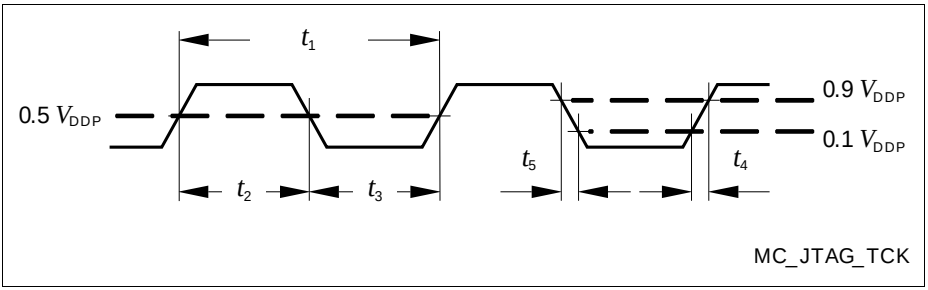

Figure 24 Test Clock Timing (TCK)

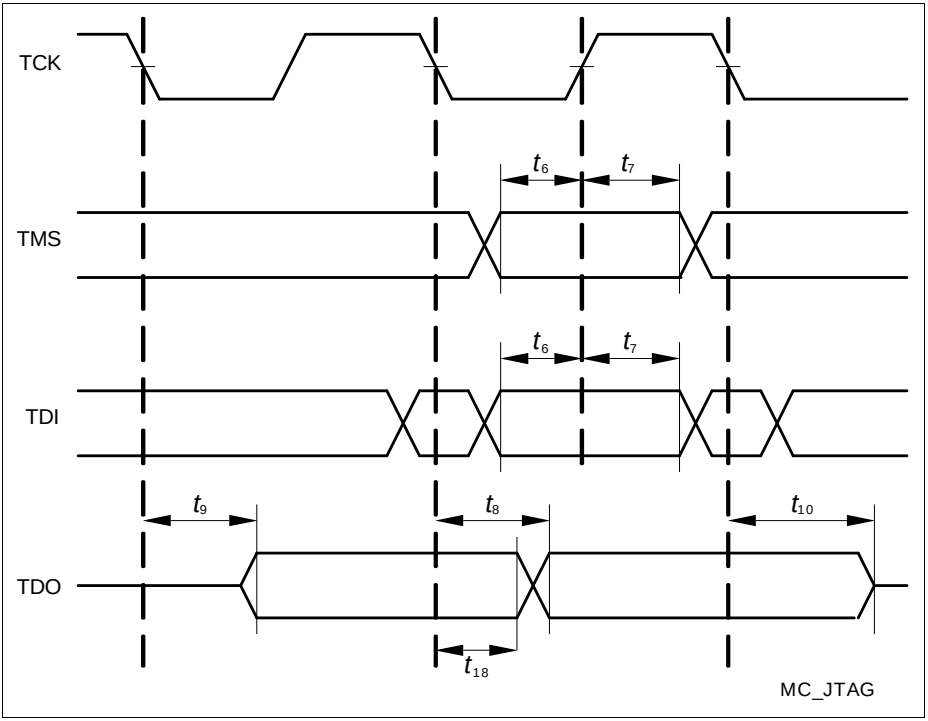

Figure 25 JTAG Timing

Debug via SPD

The SPD interface will work with standard SPD tools having a sample/output clock frequency deviation of +/- 5% or less.

Note: For further details please refer to application note AP24004 in section SPD Timing Requirements.

Note: Operating Conditions apply.

5 Package and Reliability

The XE166 Family devices use the package type:

- PG-VQFN (Plastic Green - Very Thin Profile Quad Flat Non-Leaded Package)

The following specifications must be regarded to ensure proper integration of the XE161FU in its target environment.

5.1 Packaging

These parameters specify the packaging rather than the silicon.

Table 40 Package Parameters (PG-VQFN-48-54)

Parameter	Symbol	Limit Values		Unit	Notes
		Min.	Max.		
Exposed Pad Dimension	Ex × Ey	–	5.2 x 5.2	mm	–
Power Dissipation	P_{DISS}	–	0.6	W	–
Thermal resistance Junction-Ambient	$R_{\Theta JA}$	–	75	K/W	No thermal via, 2-layer[1)]
			51	K/W	No thermal via, 4-layer[2)]
			46	K/W	4-layer, no pad[3)]
			36	K/W	4-layer, pad[4)]

1) Device mounted on a 2-layer JEDEC board (according to JESD 51-3) without thermal vias; exposed pad not soldered.

2) Device mounted on a 4-layer JEDEC board (according to JESD 51-7) without thermal vias; exposed pad not soldered.

3) Device mounted on a 4-layer JEDEC board (according to JESD 51-7) with thermal vias; exposed pad not soldered.

4) Device mounted on a 4-layer JEDEC board (according to JESD 51-7) with thermal vias; exposed pad soldered to the board.

Note: To improve the EMC behavior, it is recommended to connect the exposed pad to the board ground, independent of the thermal requirements. Board layout examples are given in an application note.

Package Compatibility Considerations

The XE161FU is a member of the XE166 Family of microcontrollers. It is also compatible to a certain extent with members of similar families or subfamilies.

Each package is optimized for the device it houses. Therefore, there may be slight differences between packages of the same pin-count but for different device types. In

particular, the size of the Exposed Pad (if present) may vary.

If different device types are considered or planned for an application, it must be ensured that the board layout fits all packages under consideration.

Package Outlines

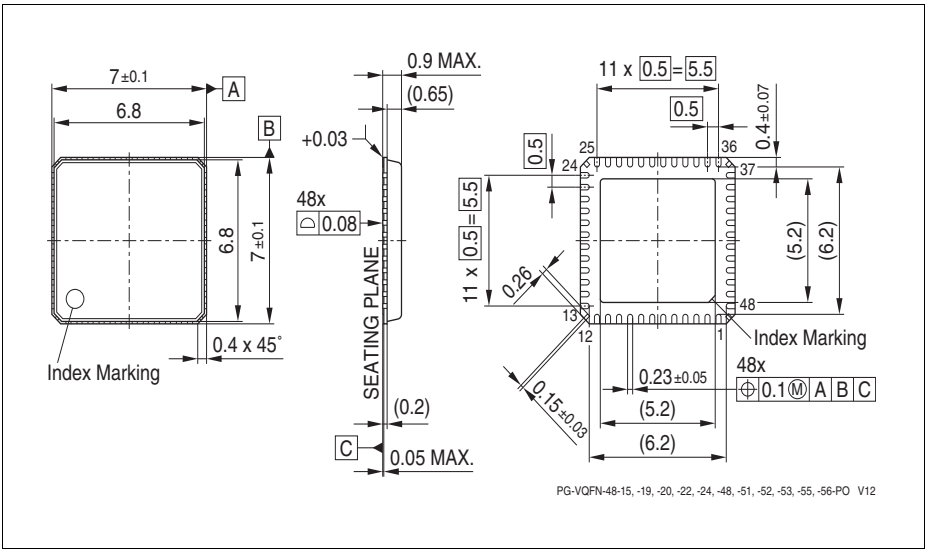

Figure 26 PG-VQFN-48-54 (Plastic Green Thin Quad Flat Package)

All dimensions in mm.

You can find complete information about Infineon packages, packing and marking in our Infineon Internet Page “Packages”: **http://www.infineon.com/packages**

5.2 Thermal Considerations

When operating the XE161FU in a system, the total heat generated in the chip must be dissipated to the ambient environment to prevent overheating and the resulting thermal damage.

The maximum heat that can be dissipated depends on the package and its integration into the target board. The “Thermal resistance $R_{\Theta JA}$” quantifies these parameters. The power dissipation must be limited so that the average junction temperature does not exceed 150 °C.

The difference between junction temperature and ambient temperature is determined by
$\Delta T = (P_{INT} + P_{IOSTAT} + P_{IODYN}) \times R_{\Theta JA}$

The internal power consumption is defined as
$P_{INT} = V_{DDP} \times I_{DDP}$ (switching current and leakage current).

The static external power consumption caused by the output drivers is defined as
$P_{IOSTAT} = \Sigma((V_{DDP}-V_{OH}) \times I_{OH}) + \Sigma(V_{OL} \times I_{OL})$

The dynamic external power consumption caused by the output drivers (P_{IODYN}) depends on the capacitive load connected to the respective pins and their switching frequencies.

If the total power dissipation for a given system configuration exceeds the defined limit, countermeasures must be taken to ensure proper system operation:

- Reduce V_{DDP}, if possible in the system
- Reduce the system frequency
- Reduce the number of output pins
- Reduce the load on active output drivers

5.3 Quality Declarations

The operation lifetime of the XE161FU depends on the operating temperature. The lifetime decreases with increasing temperature as shown in **Table 42**.

Table 41 Quality Parameters

Parameter	Symbol	Values			Unit	Note / Test Condition
		Min.	Typ.	Max.		
Operation lifetime	t_{OP} CC	–	–	20	a	See **Table 42**
ESD susceptibility according to Human Body Model (HBM)	V_{HBM} SR	–	–	2000	V	EIA/JESD22-A114-B
Moisture sensitivity level	MSL CC	–	–	3	–	JEDEC J-STD-020C

Table 42 Lifetime Dependency on Temperature

Operating Time	Operating Temperature
20 a	$T_J \leq 110°C$
95 500 h	$T_J = 120°C$
68 500 h	$T_J = 125°C$
49 500 h	$T_J = 130°C$
26 400 h	$T_J = 140°C$
14 500 h	$T_J = 150°C$

w w w . i n f i n e o n . c o m

Published by Infineon Technologies AG