XC9401 Series

ETR3201-006

Off-line Controllers for LED Lighting

■GENERAL DESCRIPTION

The XC9401 series are off-line controller ICs for LED lighting. Through optimization of the external components, these ICs can be made to operate in a range from 85VAC to 270VAC, as well as by DC input, and a diversity of specifications can be achieved by selecting components appropriate for the circuit configuration. Fixed off-time control is used for the basic control method, and by detecting the current that flows to the external power MOSFET, the current that flows to the LED is monitored to provide a stable power supply for LED lighting. Two product series differing by function type are available, the XC9401A type and the XC9401B type.

The circuit configuration of type A is designed for the power factor, achieving a high power factor by synchronizing the LED current to the input current (sine wave). In this circuit configuration, a high-capacity, high-withstand voltage electrolytic capacitor is not necessary after the bridge rectifier circuit from the AC input. The input filter removes high frequency switching noise from the AC line, allowing a small-capacity ceramic capacitor to be used.

Type B holds the peak current due to switching that flows to the external power MOSFET constant, enabling the LED current to be kept constant. By keeping the LED current constant, this circuit configuration makes it possible to achieve a stable light source with high efficiency.

■APPLICATIONS

- ●LED lights (<=10W)
- ●LED lamps
- ●LED tube lights
- ●LED spot lights
- ●LED stands

■TYPICAL APPLICATION CIRCUITS

(XC9401B605MR-G 100VAC Non-isolation buck Type)

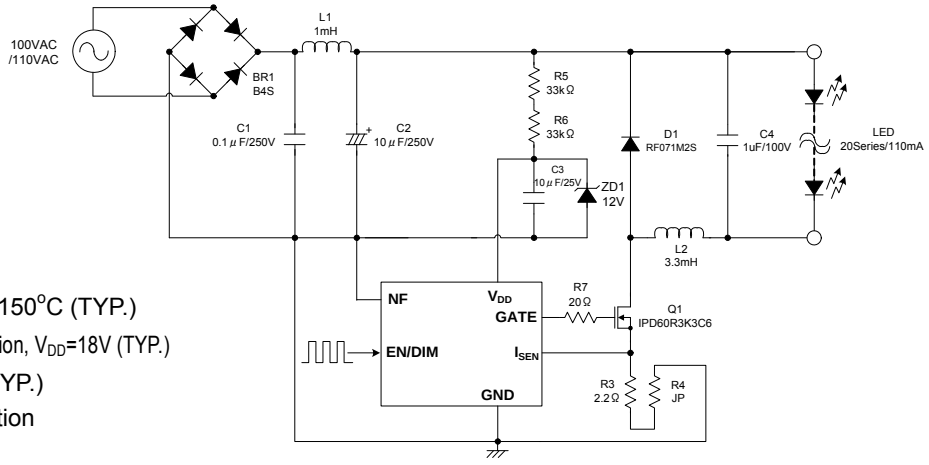

■FEATURES

Operating Voltage	:	85VAC ~ 270VAC
V_{DD} Input Voltage Range	:	9V ~ 15V
Fixed Off-time	:	6.0μs
Protection Circuits	:	Thermal Shutdown 150°C (TYP.) V_{DD} Over voltage protection, V_{DD}=18V (TYP.) UVLO, V_{DD}=6.5V (TYP.) Over current protection V_{ISEN}=0.7V (TYP.)
Dimming	:	PWM Dimming
Package	:	SOT-26
Operating Ambient Temperature	:	-40°C ~ +85°C
Environmentally Friendly	:	EU RoHS Compliant, Pb Free

■SOLUTION EXAMPLES

Input Voltage	Product Type	Isolation / Non-Isolation	Topology	Efficiency	Power Factor
100VAC / 110VAC	XC9401B605MR	Non-Isolation	Buck	91%	0.6
220VAC / 240VAC	XC9401B605MR	Isolation	Flyback	83%	0.6
	XC9401A605MR			82%	0.9
220VAC / 240VAC	XC9401B605MR	Non-Isolation	Buck	87%	0.6
DC / 12VAC	XC9401B605MR	-	Buck	88%	-
	XC9401B605MR	-	Buck-Boost	86%	-

*Due to dispersion of constant values of external components, the above values may be deviated.
Please understand that the above are typical values. For details, refer to the XC9401 Series Application Notes.

■BLOCK DIAGRAM

1) XC9401 Series, Type A

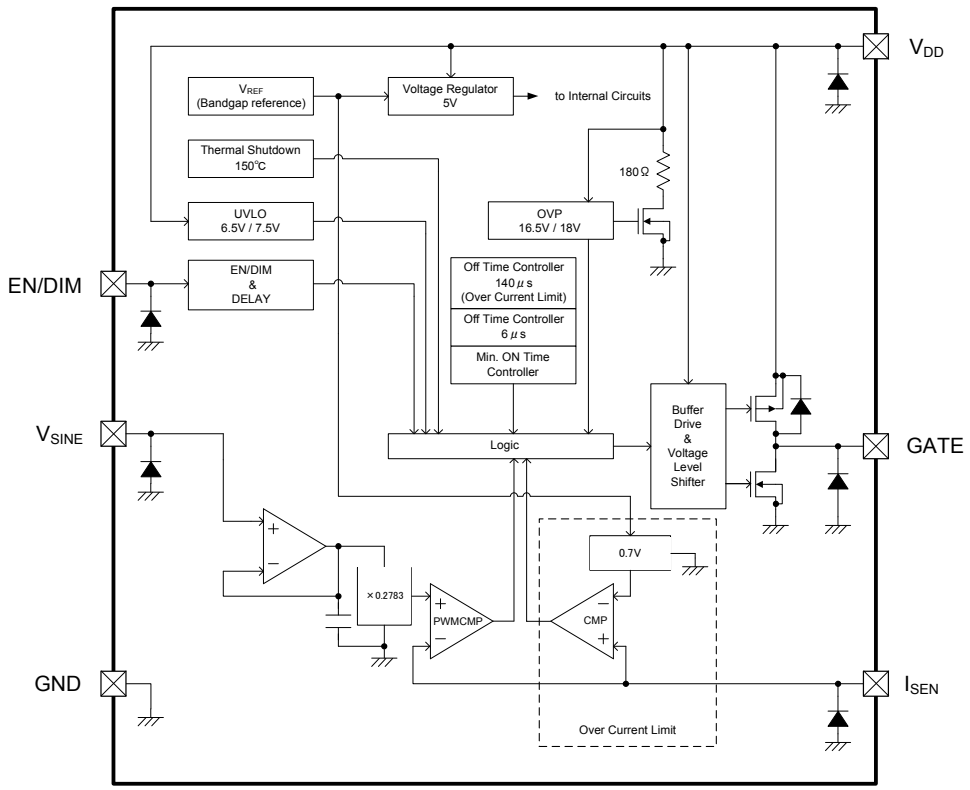

2) XC9401 Series, Type B

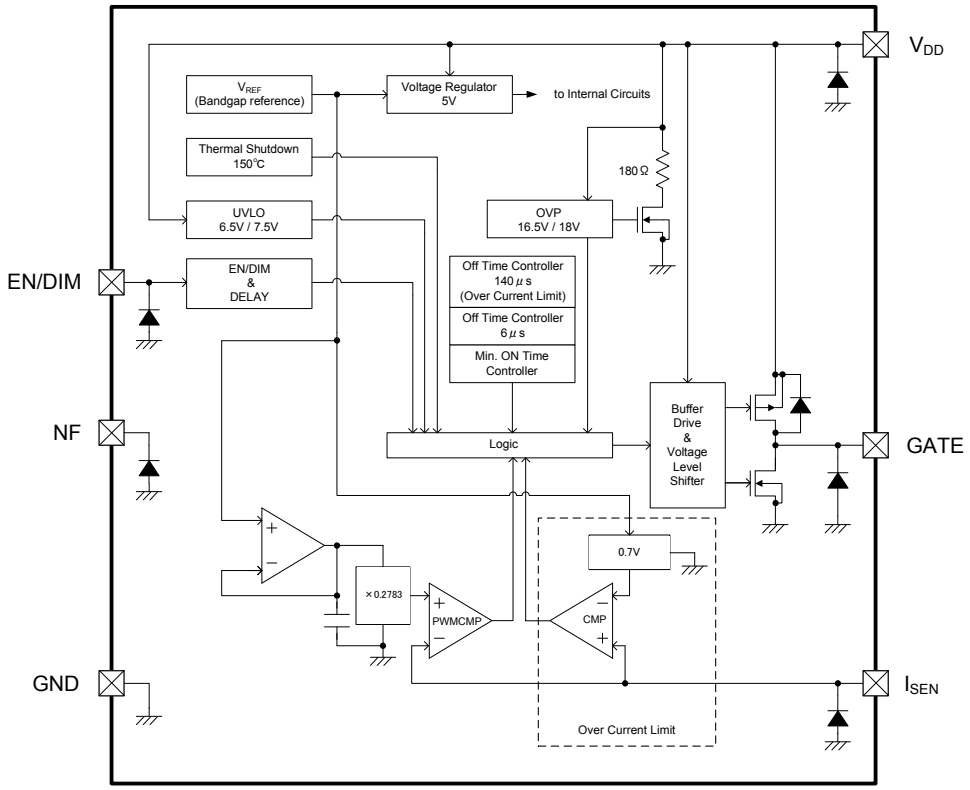

■ PRODUCT CLASSIFICATION

●Ordering Information

XC9401①②③④⑤⑥-⑦

DESIGNATOR	ITEM	SYMBOL	DESCRIPTION
①	Type	A	Refer to Selection Guide
		B	
②	OFF Time	6	OFF Time is fixed in 6μs
③④	Accuracy	05	I_{SEN} Voltage Accuracy is ±5%
⑤⑥-⑦ (*1)	Package (Order Unit)	MR-G	SOT-26 (3,000/Reel)

(*1) The "-G" suffix denotes Halogen and Antimony free as well as being fully RoHS compliant.

●Selection Guide

TYPE	COMPARISON WITH ISEN	PWM DIMMING	DESCRIPTION
A	"V_{SINE}" × 0.2783	Yes	Type A is suitable for PFC circuit.
B	"V_{REF}" × 0.278	Yes	Type B is suitable for constant LED current circuit.

■PIN CONFIGURATION

*Type A

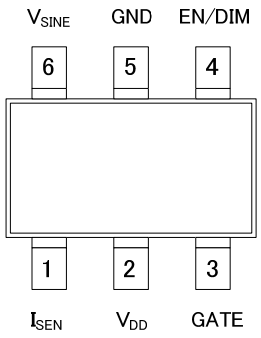

SOT-26
(TOP VIEW)

*Type B

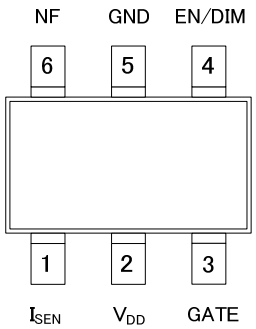

SOT-26
(TOP VIEW)

■PIN ASSIGNMENT

PIN NUMBER SOT-26	PIN NAME	FUNCTIONS
1	I_{SEN}	Current Feedback
2	V_{DD}	Power Input
3	GATE	External Power MOS Drive
4	EN/DIM	Active / Stand-by / PWM Dimming Control
5	GND	Ground
6	Type A: V_{SINE}	V_{SINE} Pin: Current Feedback Reference Voltage Input.
	Type B: NF	NF Pin: No Function. Please connect to GND.

■FUNCTION

PIN NAME	EN/DIM	STATUS
EN/DIM	L	Stand-by Mode
	H	Active Mode
	OPEN	Undefined State (*1)

(*1) Prohibited in the XC9401 series due to undefined operation.

■ABSOLUTE MAXIMUM RATINGS

Ta=25°C

PARAMETER		SYMBOL	RATINGS	UNITS
V_{DD} Pin Voltage		V_{DD}	-0.3 ~ +19.4	V
EN/DIM Pin Voltage		V_{ENDIM}	-0.3 ~ +19.4	V
GATE Pin Voltage		V_{MODE}	-0.3 ~ V_{DD}+0.3 or +19.4 (*2)	V
I_{SEN} Pin Voltage		V_{ISEN}	-0.3 ~ 5.5	V
V_{SINE} Pin Voltage		V_{SINE}	-0.3 ~ 5.5	mA
NF Pin Voltage		V_{NF}		
Power Dissipation	SOT-26	Pd	250	mW
Operating Ambient Temperature		Topr	-40 ~ +85	℃
Storage Temperature		Tstg	-55 ~ +125	℃

(*1) All voltages are described based on GND.

(*2) The maximum value should be either V_{DD}+0.3 or +19.4V in the lowest.

■ELECTRICAL CHARACTERISTICS

XC9401 Series, Type A

Ta=25°C

PARAMETER	SYMBOL	CONDITIONS	MIN.	TYP.	MAX.	UNITS	CIRCUIT
V_{DD} Voltage Range	V_{DD}		9	-	15	V	①
I_{SEN} Voltage	V_{ISEN}	V_{ISEN}=SWEEP (*1), V_{SINE}=1V	0.2644	0.2783	0.2922	V	①
V_{SINE} Voltage Range (*2)	V_{SINE}		GND	-	1.8	V	①
UVLO Detect Voltage	V_{UVLO}	V_{DD}=SWEEP (*3)	5.5	6.5	7.5	V	①
UVLO Release Voltage	V_{UVLOR}	V_{DD}=SWEEP (*4)	6.5	7.5	8.5	V	①
UVLO Hysteresis Width	V_{UVLOH}	V_{UVLOH}=V_{UVLOR} - V_{UVLO}	-	1.1	-	V	①
Supply Current (*5)	I_{DD}	V_{DD}=$V_{EN/DIM}$=15V	-	250	300	μA	①
Stand-by Current (*6)	I_{STB}	V_{DD}=15V, $V_{EN/DIM}$=GND, V_{SINE}=GND	-	225	280	μA	①
V_{DD} Overvoltage Protection Voltage	V_{OVP}	V_{DD}=SWEEP (*3), $V_{EN/DIM}$=V_{DD}	17	18	19	V	①
V_{DD} Overvoltage Protection Release Voltage	V_{OVPR}	V_{DD}=SWEEP (*4), $V_{EN/DIM}$=V_{DD}	15.5	16.5	17.5	V	①
V_{DD} Overvoltage Protection Hysteresis Width	V_{OVPH}	V_{OVPH}=V_{OVP} - V_{OVPR}	-	1.5	-	V	①
V_{DD} Overvoltage Protection Discharge Current (*7)	I_{OVP}	V_{DD}=19V	-	30	-	mA	①
GATE "H" ON Resistance	R_{GATEH}	I_{GATE} = -10mA R_{GATEH} = (V_{DD}-V_{GATE}) / I_{GATE}	2	5	8	Ω	③
GATE "L" ON Resistance	R_{GATEL}	V_{ISEN}=1V, R_1=300Ω R_{GATEL}= V_{GATE} / I_{R1} (*8)	-	5	-	Ω	④
OFF Time (*9)	t_{OFF}	V_{ISEN}=0.4V, V_{SINE}=1V	-	6	-	μs	①
Minimum ON Time	t_{ONMIN}	V_{ISEN}=1V	-	0.2	-	μs	①
Current Limit Voltage (*10)	V_{LIM}	V_{ISEN}=SWEEP, V_{SINE}=1.4V	0.65	0.70	0.95	V	①
Thermal Shutdown Temperature (*11)	T_{TSD}		-	150	-	°C	①
Thermal Shutdown Release Temperature	T_{TSDR}		-	130	-	°C	①
Thermal Shutdown Hysteresis Width	T_{HYS}		-	20	-	°C	①
PWM Dimmer Delay Time1 (*12)	$t_{PWMDIM1}$	$V_{EN/DIM}$=2.2V to GND	-	0.3	4.0	μs	②
PWM Dimmer Delay Time2 (*13)	$t_{PWMDIM2}$	$V_{EN/DIM}$=GND to 2.2V	100	140	200	μs	②
EN/DIM "H" Voltage	$V_{EN/DIMH}$		2.2	-	15.0	V	①
EN/DIM "L" Voltage	$V_{EN/DIML}$		GND	-	0.4	V	①
EN/DIM Bias Current	$I_{EN/DIMH}$	$V_{EN/DIM}$=15V	-	-	32	μA	①

Unless otherwise stated, GND standard, V_{DD}=13V, $V_{EN/DIM}$=V_{DD}, V_{ISEN}=GND, V_{SINE}=5.5V

(*1) I_{SEN} pin voltage measured at start of GATE pin switching.

(*2) Indicates V_{SINE} pin voltage at which OFF TIME 6μs switching becomes possible.

(*3) V_{DD} pin voltage measured when GATE pin=L occurs.

(*4) V_{DD} pin voltage measured when GATE pin=H occurs.

(*5) Indicates internal supply current when "H" level is input into EN/DIM pin and all circuits are activated. (When not switching.)

(*6) Indicates internal supply current when "L" level is input into EN/DIM pin and the switching circuit is stopped.

(*7) Indicates the current that discharges the capacitance between the V_{DD} and GND pins at V_{OVP}.

(*8) Please refer to P.7 "CIRCUIT④".

(*9) May not be fixed at 6μs when UVLO is detected or during DIM signal control.

(*10) When the current limit voltage V_{LIM} is exceeded, off time is extended to about 140μs to prevent element damage. For details, refer to the operation description.

(*11) To protect the IC from thermal destruction, thermal shutdown activates when the chip temperature reaches 150°C and forcibly sets the GATE pin voltage to "L". When the chip temperature falls to 130°C, operation resumes.

(*12) Time from attainment of EN/DIM "L" voltage until GATE pin=L.

(*13) Time from attainment of EN/DIM "H" voltage until GATE pin=H.

■ELECTRICAL CHARACTERISTICS (Continued)

XC9401 Series, Type B — Ta=25°C

PARAMETER	SYMBOL	CONDITIONS	MIN.	TYP.	MAX.	UNITS	CIRCUIT
V_{DD} Voltage Range	V_{DD}		9	-	15	V	①
I_{SEN} Voltage	V_{ISEN}	V_{ISEN}=SWEEP (*1)	0.3259	0.3430	0.3602	V	①
UVLO Detect Voltage	V_{UVLO}	V_{DD}=SWEEP (*2)	5.5	6.5	7.5	V	①
UVLO Release Voltage	V_{UVLOR}	V_{DD}=SWEEP (*3)	6.5	7.5	8.5	V	①
UVLO Hysteresis Width	V_{UVLOH}	V_{UVLOH}=V_{UVLOR} - V_{UVLO}	-	1.1	-	V	①
Supply Current (*4)	I_{DD}	V_{DD}=$V_{EN/DIM}$=15V	-	250	300	μA	①
Stand-by Current (*5)	I_{STB}	V_{DD}=15V, $V_{EN/DIM}$=GND	-	225	280	μA	①
V_{DD} Overvoltage Protection Voltage	V_{OVP}	V_{DD}=SWEEP (*2)	17	18	19	V	①
V_{DD} Overvoltage Protection Release Voltage	V_{OVPR}	V_{DD}=SWEEP (*3)	15.5	16.5	17.5	V	①
V_{DD} Overvoltage Protection Hysteresis Width	V_{OVPH}	V_{OVPH}=V_{OVP} - V_{OVPR}	-	1.5	-	V	①
V_{DD} Overvoltage Protection Discharge Current (*6)	I_{OVP}	V_{DD}=19V	-	30	-	mA	①
GATE "H" ON Resistance	R_{GATEH}	I_{GATE} = -10mA R_{GATEH} = (V_{DD} - V_{GATE}) / I_{GATE}	2	5	8	Ω	③
GATE "L" ON Resistance	R_{GATEL}	V_{ISEN}=1V, R_1=300Ω R_{GATEL}= V_{GATE} / I_{R1} (*7)	-	5	-	Ω	④
OFF Time (*8)	t_{OFF}	V_{ISEN}=0.45V	-	6	-	μs	①
Minimum ON Time	t_{ONMIN}	V_{ISEN}=1V	-	0.2	-	μs	①
Current Limit Voltage (*9)	V_{LIM}	V_{ISEN}=SWEEP	0.65	0.70	0.95	V	①
Thermal Shutdown Temperature (*10)	T_{TSD}		-	150	-	°C	①
Thermal Shutdown Release Temperature	T_{TSDR}		-	130	-	°C	①
Thermal Shutdown Hysteresis Width	T_{HYS}		-	20	-	°C	①
PWM Dimmer Delay Time1 (*11)	$t_{PWMDIM1}$	$V_{EN/DIM}$=2.2V to GND	-	0.3	4.0	μs	①
PWM Dimmer Delay Time2 (*12)	$t_{PWMDIM2}$	$V_{EN/DIM}$=GND to 2.2V	100	140	200	μs	②
EN/DIM "H" Voltage	$V_{EN/DIMH}$		2.2	-	15.0	V	②
EN/DIM "L" Voltage	$V_{EN/DIML}$		GND	-	0.4	V	①
EN/DIM Bias Current	$I_{EN/DIMH}$	$V_{EN/DIM}$=15V	-	-	32	μA	①

Unless otherwise stated, GND standard, V_{DD}=13V, $V_{EN/DIM}$=V_{DD}, V_{ISEN}=GND, V_{SINE}=5.5V

(*1) I_{SEN} pin voltage measured at start of GATE pin switching.

(*2) Indicates V_{SINE} pin voltage at which OFF TIME 6μs switching becomes possible.

(*3) V_{DD} pin voltage measured when GATE pin=L occurs.

(*4) V_{DD} pin voltage measured when GATE pin=H occurs.

(*5) Indicates internal supply current when "H" level is input into EN/DIM pin and all circuits are activated. (When not switching.)

(*6) Indicates internal supply current when "L" level is input into EN/DIM pin and the switching circuit is stopped.

(*7) Indicates the current that discharges the capacitance between the V_{DD} and GND pins at V_{OVP}.

(*8) Please refer to P.8 "CIRCUIT④".

(*9) May not be fixed at 6μs when UVLO is detected or during DIM signal control.

(*10) When the current limit voltage V_{LIM} is exceeded, off time is extended to about 140μs to prevent element damage. For details, refer to the operation description.

(*11) To protect the IC from thermal destruction, thermal shutdown activates when the chip temperature reaches 150°C and forcibly sets the GATE pin voltage to "L". When the chip temperature falls to 130°C, operation resumes.

(*12) Time from attainment of EN/DIM "L" voltage until GATE pin=L.

(*13) Time from attainment of EN/DIM "H" voltage until GATE pin=H.

■TYPICAL APPLICATION CIRCUIT (Type A)

1) CIRCUIT①

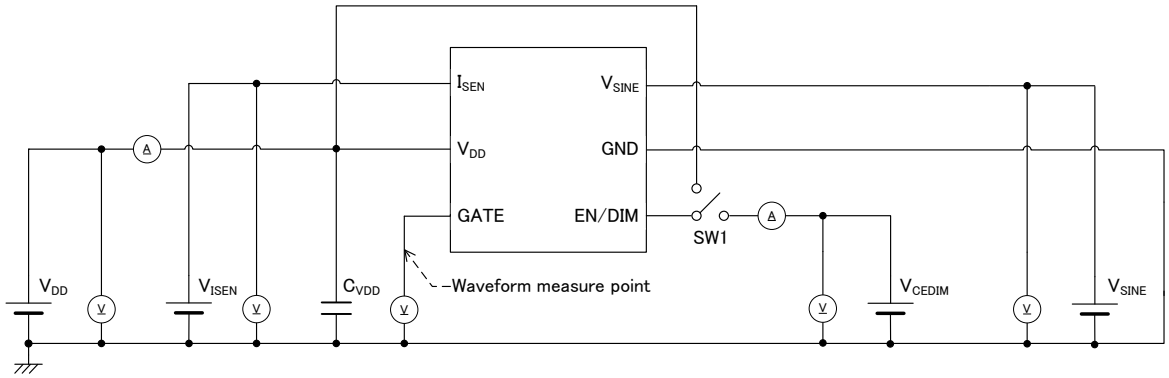

2) CIRCUIT②

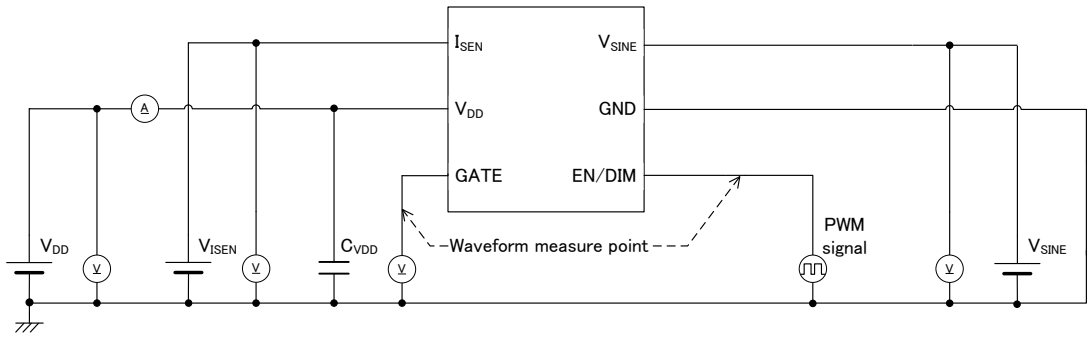

3) CIRCUIT③

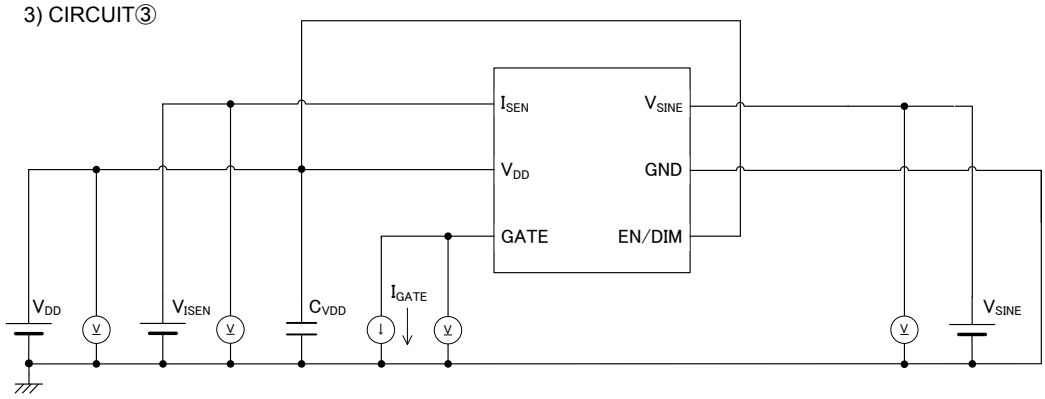

4) CIRCUIT④

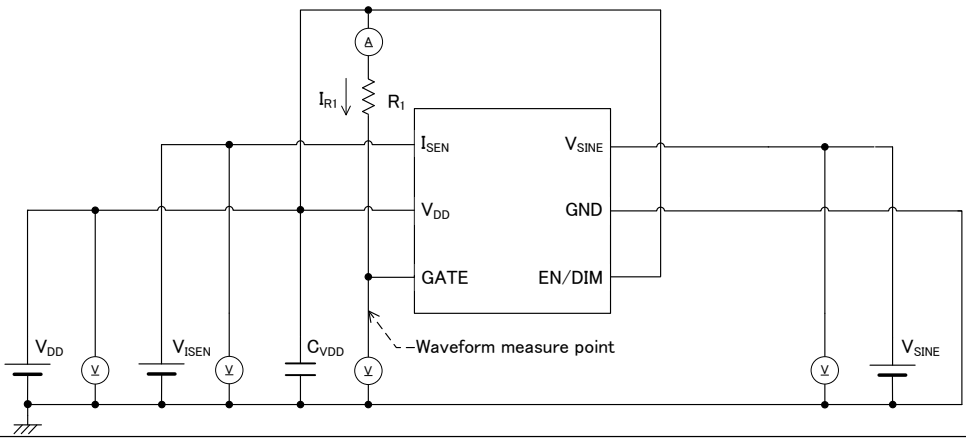

■TYPICAL APPLICATION CIRCUIT (Continued) (Type B)

1) CIRCUIT①

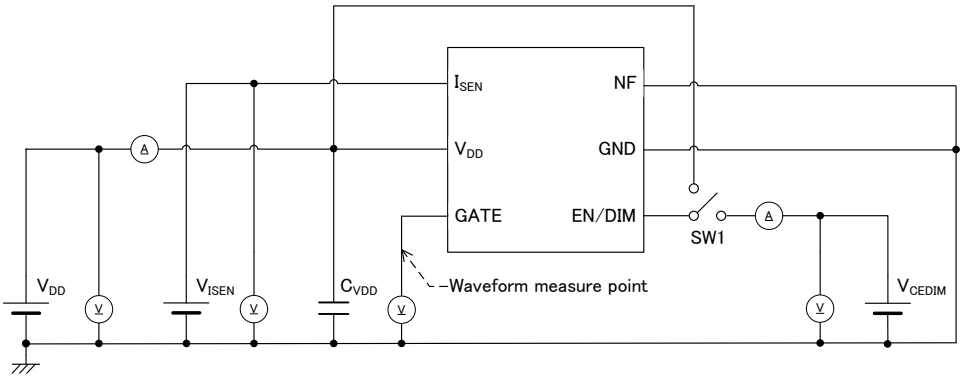

2) CIRCUIT②

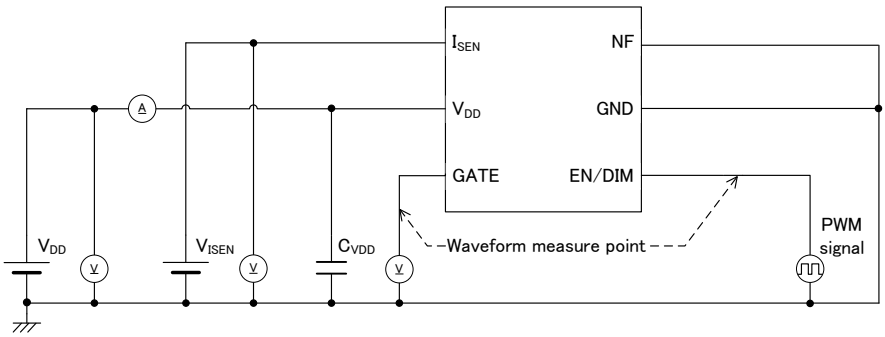

3) CIRCUIT③

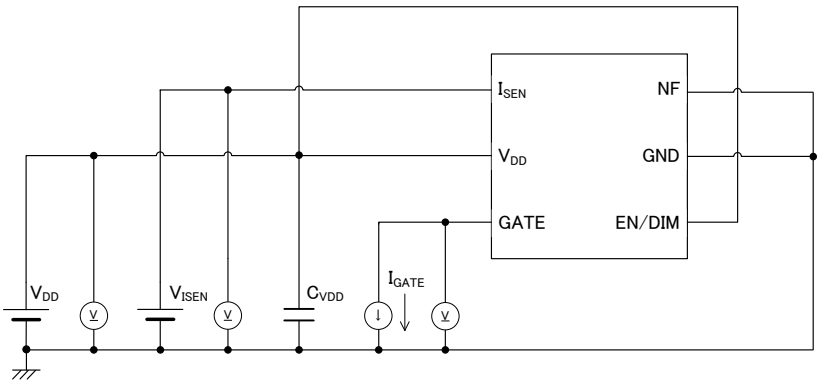

4) CIRCUIT④

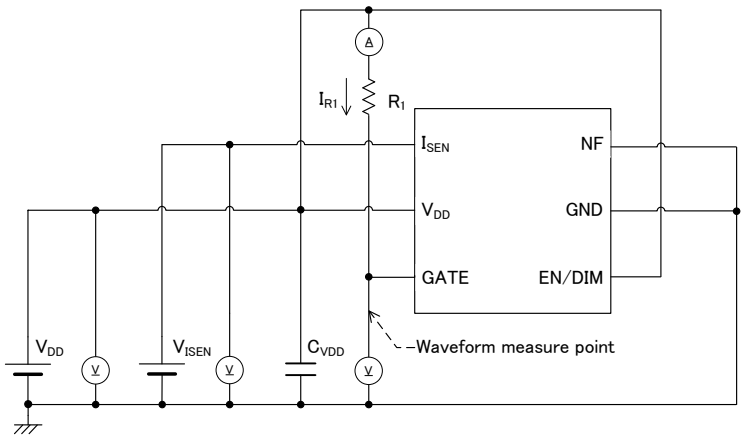

■OPERATIONAL EXPLANATION

The internal circuitry of the XC9401 series consists of a reference voltage source (V_{REF}), PWM comparator (PWMCMP), buffer drive circuit (Buffer Drive), over-current protection circuit (Over Current Limit), under-voltage lockout circuit (UVLO), V_{DD} over voltage protection circuit (OVP), thermal shutdown circuit (Thermal Shutdown), and other circuits. (Refer to the block diagram.) The control method is fixed off-time control.

With type A, the PWM comparator compares the voltage at the I_{SEN} pin to that at the V_{SINE} pin x 0.2783 (TYP.) The output of the PWM comparator is connected to the buffer drive circuit and an external Power MOS FET drive signal is output from the GATE pin. When the I_{SEN} pin voltage is 0.2783 times (TYP.) higher than the V_{SINE} pin voltage, the GATE pin switches to low. After a fixed off-time elapses, the GATE pin switches to high. This operation is repeated continuously.

With type B, the PWM comparator compares the 0.343V (TYP.), which is 0.2783 times (TYP.) the reference voltage, to the I_{SEN} pin voltage.

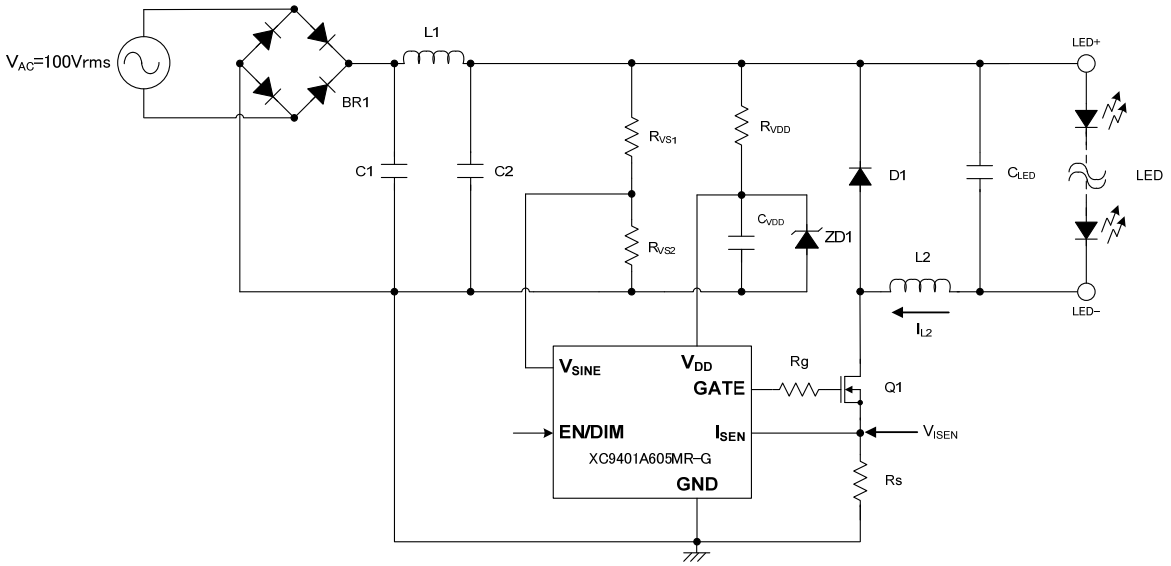

Fig.1. Reference Circuit

■OPERATIONAL EXPLANATION (Continued)

Details of each circuit block are as follows.

<Reference voltage supply (V_{REF})>

Reference voltage that enables stable operation of the internal functions of the IC.

<PWM comparator (PWMCMP)>

With type A, the PWM comparator compares the voltage at the I_{SEN} pin to that at the V_{SINE} pin x 0.2783 (TYP.) When the I_{SEN} pin voltage is higher than V_{SINE} x 0.2783, the GATE pin switches to low.

With type B, the PWM comparator compares the 0.343V (TYP.), which is 0.2783 times (TYP.) the reference voltage, to the I_{SEN} pin voltage.

<Buffer drive circuit (Buffer Drive)>

This outputs an H or L signal from the GATE pin that drives the external Power MOS FET. The H level is the V_{DD} pin voltage, and the L level is the GND pin voltage. The signal that is output is determined by the PWM comparator, as well as by the below described UVLO circuit, V_{DD} over-voltage protection circuit, over-current protection circuit, thermal shutdown, and EN/DIM pin voltage.

<Enable / PWM Dimming (EN/DIM)>

When the power is turned on, it takes about 200μs (MAX.) for the GATE pin to initially become “H” after the EN/DIM pin voltage is changed from “L” to “H”.

Inputting “L” to the EN/DIM pin voltage forcibly puts the GATE pin voltage in the “L” state. The stopped state when the EN/DIM pin voltage is “L” is not shutdown; rather, it is a Stand-by state wherein the switching pulse output is stopped by logic circuit and the internal circuitry continues to operate. For this reason, a high-speed response is possible even when a pulse signal (500 Hz to 1 kHz) is input to the EN/DIM pin, and by adjusting the duty width of the PWM signal input into the EN/DIM pin, the LED can be dimmed.

< Minimum on time controller circuit >

Spike noise and ripple noise occur in the XC9401 series due to switching. To prevent malfunction of the internal circuit by such noises, a minimum on time is established. The GATE pin voltage is forcibly kept at “H” until the minimum on time elapses. (Refer to Fig. 2.)

During the minimum on time, if the below described UVLO, OVP or thermal shutdown is detected, or if the Stand-by state is set from the EN/DIM pin, the GATE pin voltage is immediately changed to “L”.

<Off Time Controller>

This circuit controls the fixed off time. The off time is normally fixed at 6μs (TYP.), and the GATE pin voltage is kept at “L” during this time. After the fixed off time, the GATE pin voltage becomes “H”. (Refer to Fig. 2.)

If the EN/DIM pin voltage is changed from “L” to “H” during the above PWM dimming, the off time is 140μs (TYP.) during the over-current protection and ULVO release described below.

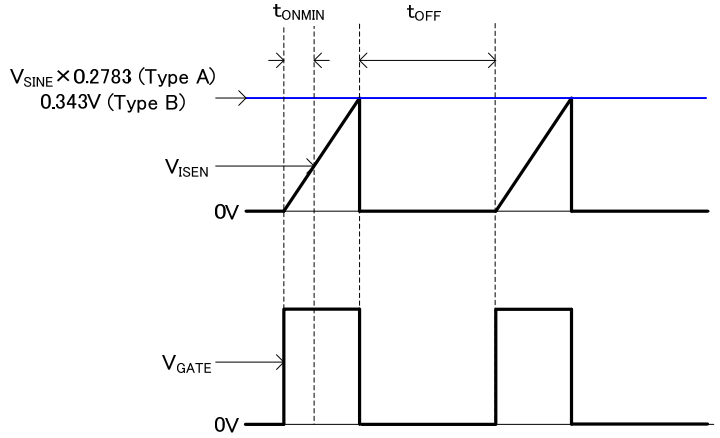

Fig.2. Off Time Controller, Min. On Time Controller

■OPERATIONAL EXPLANATION (Continued)

<Over Current Limit>

When the switching current of the external power MOSFET is in the over-current state and the I_{SEN} pin voltage reaches 0.7V (TYP.), L level voltage is output to the GATE pin and the external power MOSFET is turned off. In addition, the off time is temporarily extended from the normal 6.0μs (TYP.) to 140μs (TYP.). When the I_{SEN} pin voltage falls to 0.7V (TYP.) or less after the extended off time, normal operation resumes.

When LED+ and LED- short circuit in the reference circuit shown in Fig.1, the current slope of the coil (L2) becomes smaller during the off time than the slope during normal switching, which prevents sufficient discharge during the 6.0μs (TYP.) off time. During the minimum on time, the external power MOSFET Q1 always turns on, and thus the coil current gradually increases. The ISEN pin voltage becomes higher at the same time as the coil current increases, and when the ISEN pin voltage reaches 0.7V (TYP.), the off time is extended to 140μs (TYP.). (Refer to Fig.3)

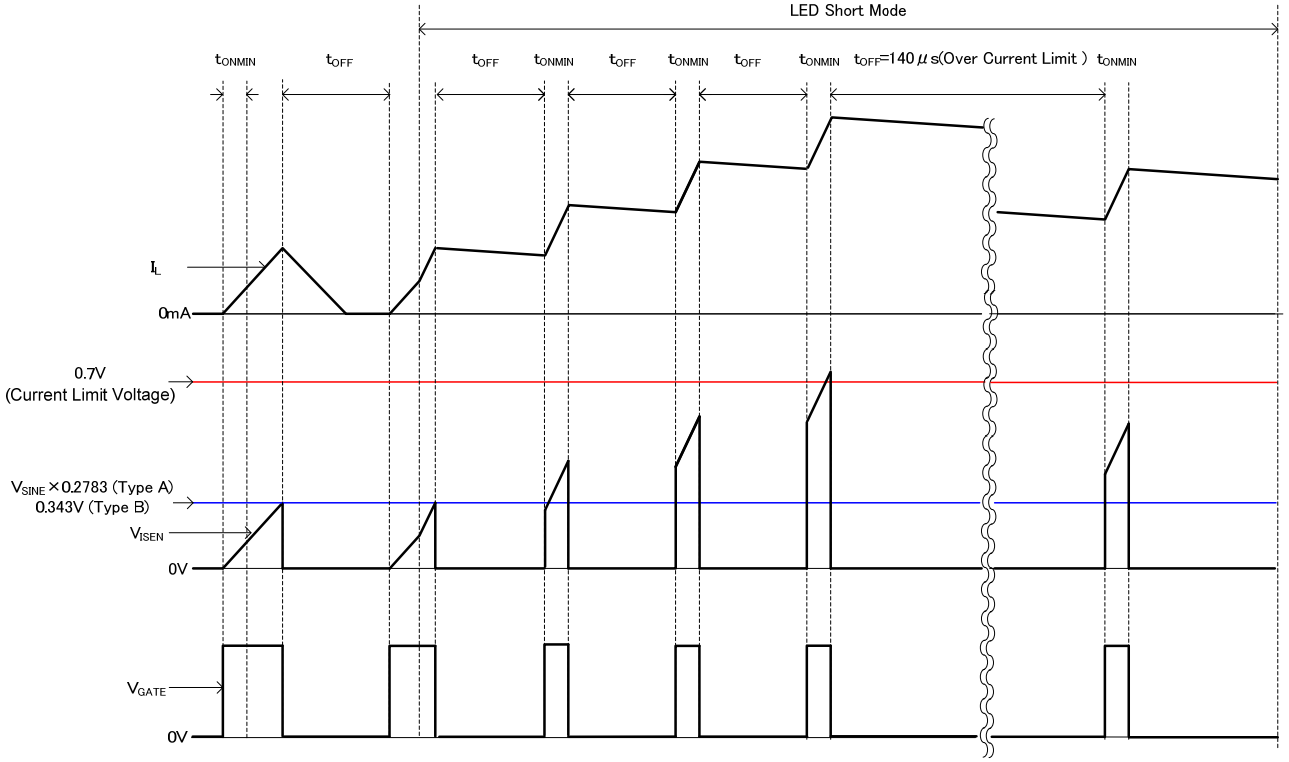

Fig.3. Over Current Limit (Fig.1. Operation when LED+ and LED- short-circuit in the reference circuit)

<Under-voltage lockout circuit>

When the V_{DD} pin voltage falls to the UVLO Detect Voltage (V_{UVLO}) or lower, the GATE pin voltage is forcibly set to “L” to prevent incorrect pulse output. When the V_{DD} pin voltage rises to the UVLO Release Voltage (V_{UVLOR}) or higher, switching resumes.

A UVLO stop simply stops pulse output; it is not a shutdown state and the internal circuitry continues to operate.

<V_{DD} over-voltage protection circuit>

When the V_{DD} pin voltage rises to the V_{DD} Overvoltage Protection Voltage (V_{OVP}) or higher, the charge of the capacitance between the V_{DD} pin and GND pin is discharged by the resistance and transistor connected between the V_{DD} pin and GND pin in order to prevent withstand voltage destruction in the internal circuitry. The GATE pin voltage at this time is forcibly set to “L”.

When the V_{DD} pin voltage falls to the V_{DD} Overvoltage Protection Release Voltage (V_{OVPR}) or lower, switching is resumed.

<Thermal shutdown>

To protect the IC from thermal destruction, thermal shutdown activates when the chip temperature reaches 150 °C (TYP.) and forcibly sets the GATE pin voltage to “L”. When the chip temperature falls to 130 °C (TYP.), switching is resumed.

■NOTE ON USE

1. For the phenomenon of temporal and transitional voltage decrease or voltage increase, the IC may be damaged or deteriorated if IC is used beyond the absolute MAX. specifications.

2. In a switching controller such as the XC9401 series, and in a peripheral circuit controlled by a switching controller, spike voltage and ripple voltage occur. These are greatly affected by the peripheral components (inductance value of the coil, capacitors, peripheral component board layout). During design, test sufficiently using the actual equipment.

3. A delay time of 200 μs (MAX.) after the UVLO release voltage, and after EN/DIM pin voltage “H”, has been established in the IC. Keep these delay times in mind during sequence design.

4. The NF pin of the XC9401B605MR-G is connected to part of the internal circuitry, although not as a circuit function. When using this IC, connect this pin to GND.

5. Make sure to use this IC within specified electric characteristics.

6. Please pay attention not to exceed absolute maximum ratings of this IC and external components.

7. To reduce V_{DD} fluctuations as much as possible, connect a bypass capacitor (C_{VDD}) over the shortest path between V_{DD} and GND. If there is too much distance between the IC and C_{VDD}, operation may become unstable.

8. Please mount each external component as close to the IC as possible. Please also wire external components as close to the IC as possible and use thick, short connecting traces to reduce the circuit impedance.

9. Sufficiently reinforce the wiring between V_{DD} and GND. Noise that enters through V_{DD} and GND during switching may cause unstable IC operation.

10. Torex places an importance on improving our products and their reliability.
We request that users incorporate fail-safe designs and post-aging protection treatment when using Torex products in their systems.

■ TYPICAL PERFORMANCE CHARACTERISTICS

(1) Supply Current vs. V_{DD} Voltage

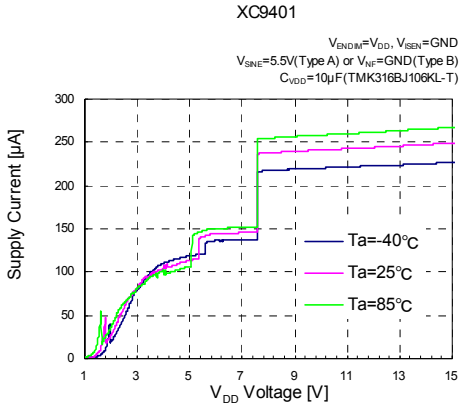

(2) Supply Current vs. Ambient Temperature

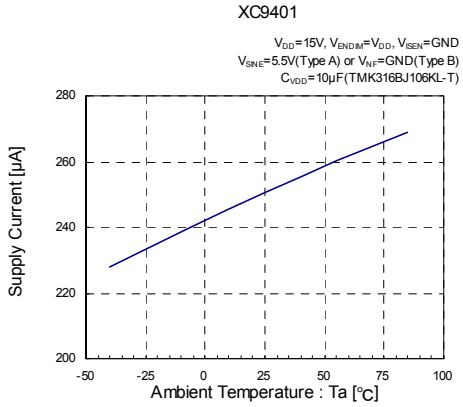

(3) Stand-by Current vs. V_{DD} Voltage

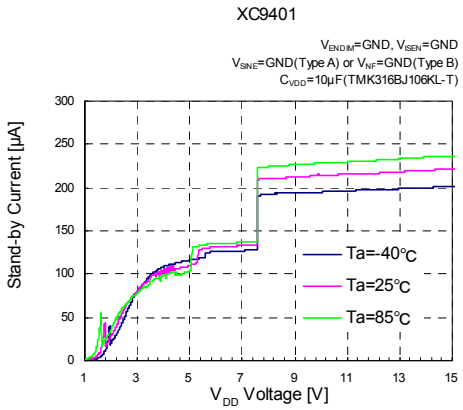

(4) Stand-by Current vs. Ambient Temperature

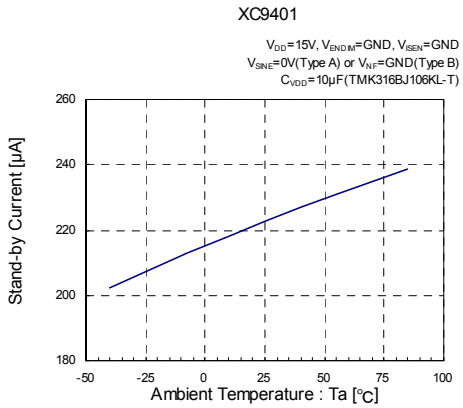

(5) EN/DIM Bias Current vs. EN/DIM Voltage

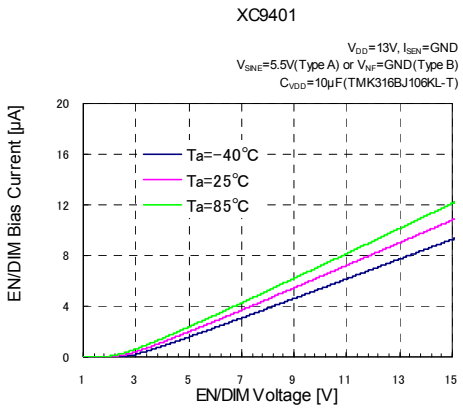

(6) EN/DIM Bias Current vs. Ambient Temperature

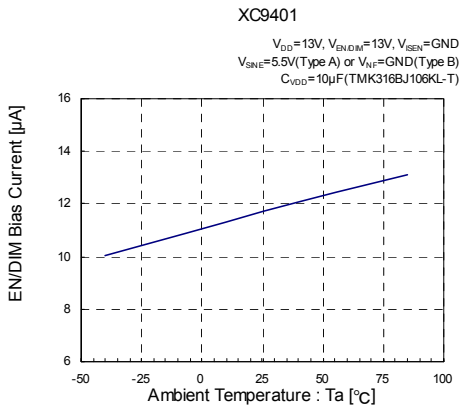

(7) I_{SEN} Voltage vs. Ambient Temperature

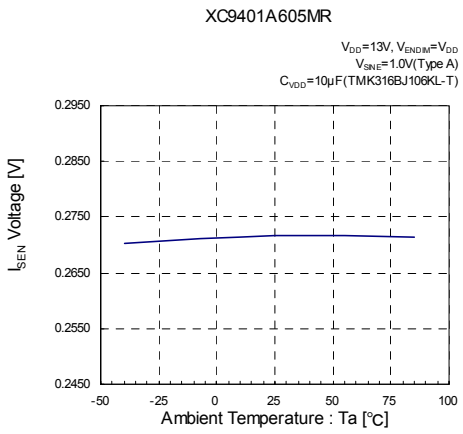

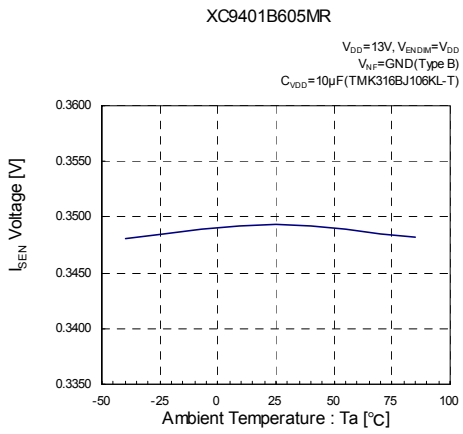

■ TYPICAL PERFORMANCE CHARACTERISTICS (Continued)

(8) UVLO Detect Voltage vs. Ambient Temperature

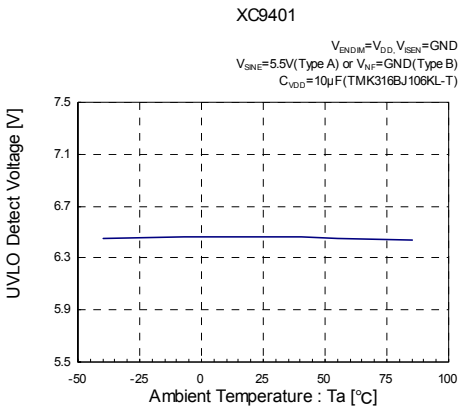

(9) UVLO Release Voltage vs. Ambient Temperature

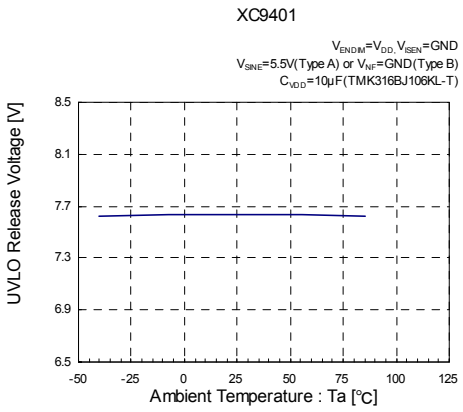

(10) UVLO Hysteresis Width vs. Ambient Temperature

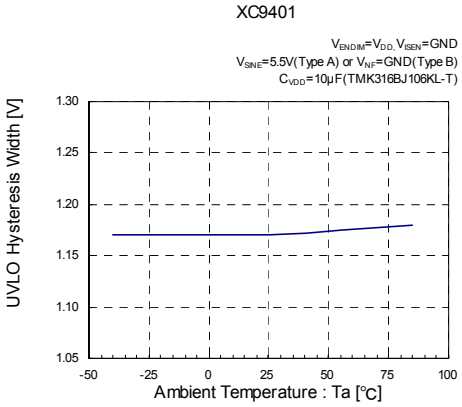

(11) V_{DD} Overvoltage Protection Voltage vs. Ambient Temperature

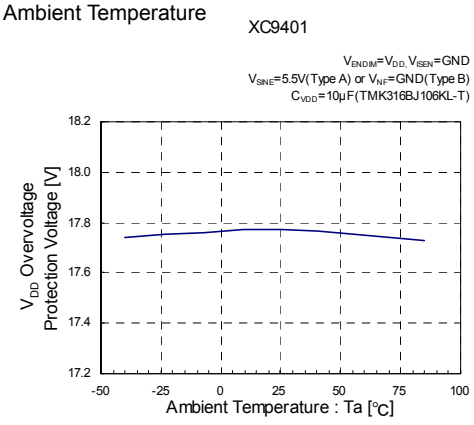

(12) V_{DD} Overvoltage Protection Release Voltage vs. Ambient Temperature

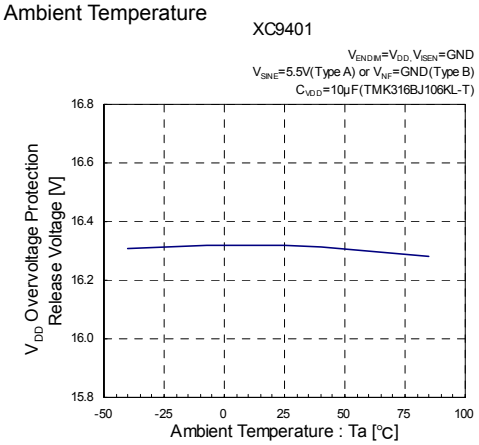

(13) V_{DD} Overvoltage Protection Hysteresis Width

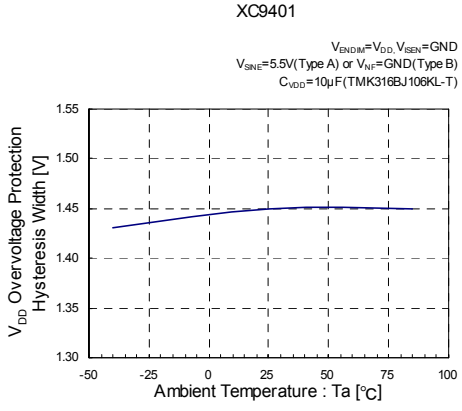

(14) V_{DD} Overvoltage Protection Discharge Current vs. Ambient Temperature

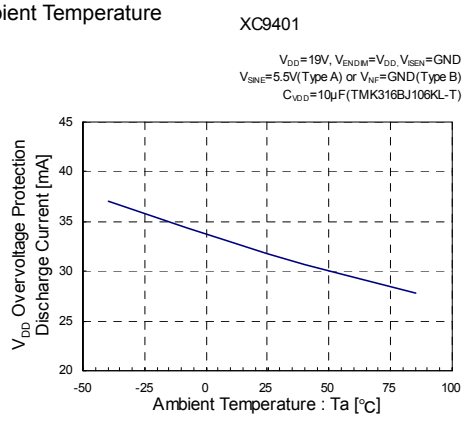

■ TYPICAL PERFORMANCE CHARACTERISTICS (Continued)

(15) GATE “H” ON Resistance vs. Ambient Temperature

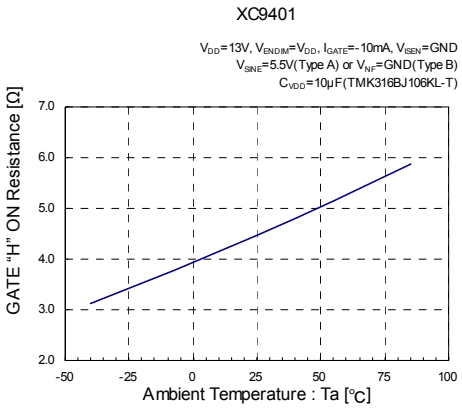

(16) GATE “L” ON Resistance vs. Ambient Temperature

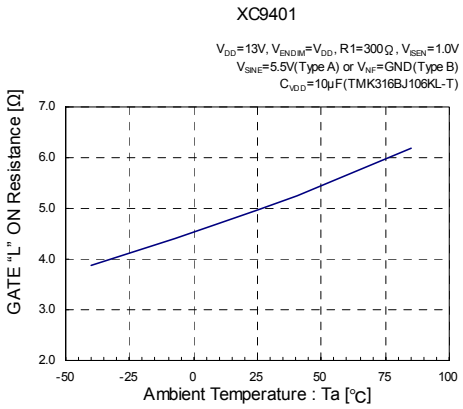

(17) OFF Time vs. Ambient Temperature

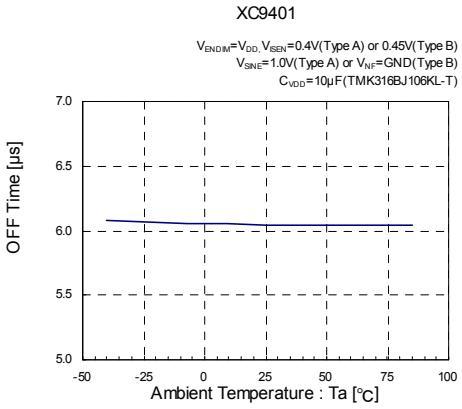

(18) Minimum ON Time vs. Ambient Temperature

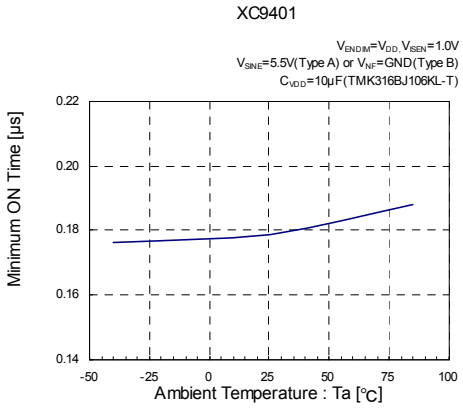

(19) Current Limit Voltage vs. Ambient Temperature

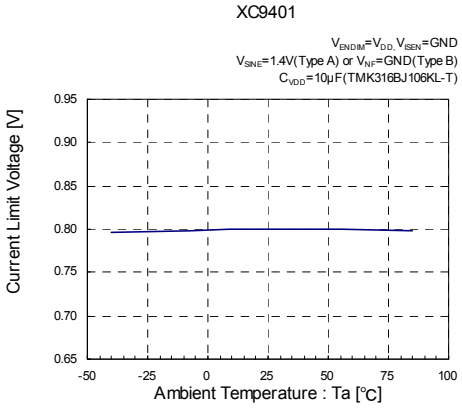

(20) PWM Dimmer Delay Time1 vs. Ambient Temperature

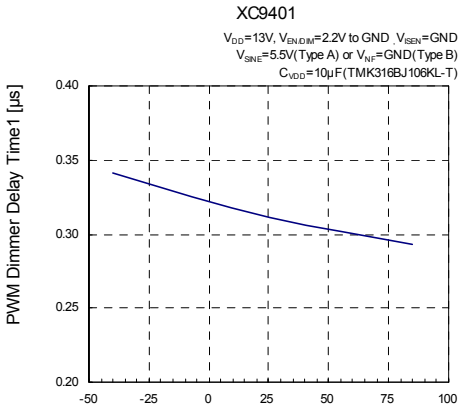

(21) PWM Dimmer Delay Time2 vs. Ambient Temperature

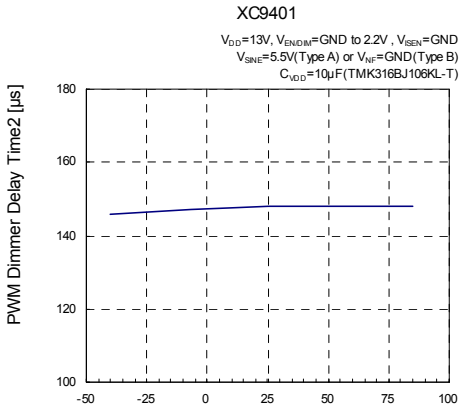

■ TYPICAL PERFORMANCE CHARACTERISTICS (Continued)

(22) EN/DIM “H” Voltage vs. Ambient Temperature

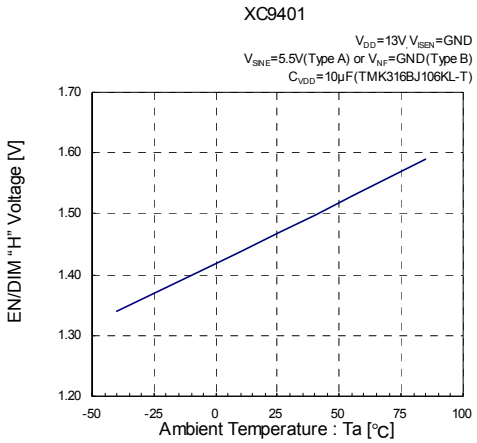

(23) EN/DIM “L” Voltage vs. Ambient Temperature

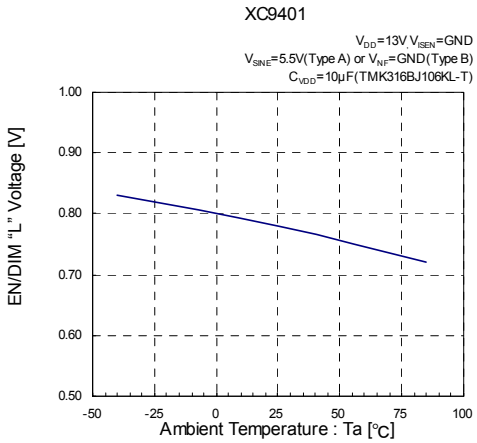

■PACKAGING INFORMATION

●SOT-26 (unit: mm)

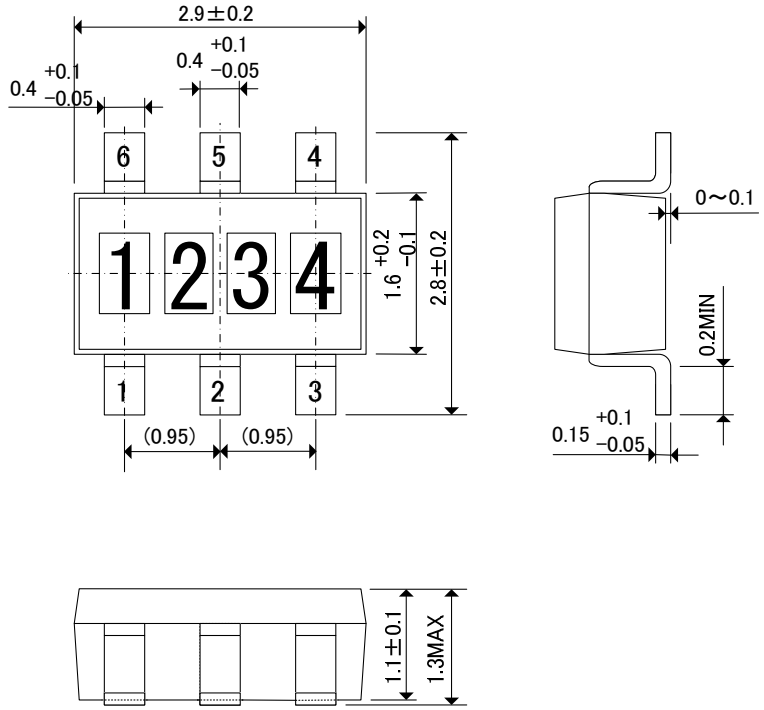

■MARKING RULE

●SOT-26

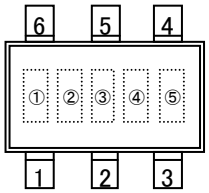

① represents product series

MARK	PRODUCT SERIES
3	XC9401******-G

②③ represents product type

MARK		PRODUCT SERIES
②	③	
A	A	XC9401A605**-G
B	A	XC9401B605**-G

④⑤ represents production lot number
01～09, 0A～0Z, 11～9Z, A1～A9, AA～AZ, B1～ZZ in order.
(G, I, J, O, Q, W excluded)
*No character inversion used.

1. The products and product specifications contained herein are subject to change without notice to improve performance characteristics. Consult us, or our representatives before use, to confirm that the information in this datasheet is up to date.
2. We assume no responsibility for any infringement of patents, patent rights, or other rights arising from the use of any information and circuitry in this datasheet.
3. Please ensure suitable shipping controls (including fail-safe designs and aging protection) are in force for equipment employing products listed in this datasheet.
4. The products in this datasheet are not developed, designed, or approved for use with such equipment whose failure of malfunction can be reasonably expected to directly endanger the life of, or cause significant injury to, the user.
   (e.g. Atomic energy; aerospace; transport; combustion and associated safety equipment thereof.)
5. Please use the products listed in this datasheet within the specified ranges.
   Should you wish to use the products under conditions exceeding the specifications, please consult us or our representatives.
6. We assume no responsibility for damage or loss due to abnormal use.
7. All rights reserved. No part of this datasheet may be copied or reproduced without the prior permission of TOREX SEMICONDUCTOR LTD.

TOREX SEMICONDUCTOR LTD.