XC6229 Series

300mA Ultra Small High Speed LDO Regulator, Built-in Inrush Current Protection

■GENERAL DESCRIPTION

The XC6229 series is a high speed LDO regulator that features high accurate, low noise, high ripple rejection, low dropout and low power consumption. Housed in the ultra-small LGA-4B01 (0.75 x 0.75, h=0.3mm MAX.) package, the XC6229 is ideal for space-saving design. The XC6229 consists of a voltage reference, an error amplifier, a driver transistor, a current limiter, a phase compensation circuit, a thermal shutdown circuit and an inrush current protection circuit.

The CE function enables the circuit to be in stand-by mode by inputting low level signal. In the stand-by mode, the series enables the electric charge at the output capacitor C_L to be discharged via the internal switch, and as a result the V_{OUT} pin quickly returns to the V_{SS} level. The output stabilization capacitor C_L is also compatible with low ESR ceramic capacitors.

The output voltage is selectable in 0.05V increments within the range of 1.2V to 4.0V which fixed by laser trimming technologies. The over current protection circuit and the thermal shutdown circuit are built-in. These two protection circuits will operate when the output current reaches current limit level or the junction temperature reaches temperature limit level.

■APPLICATIONS

- ●Mobile devices / terminals
- ●Wireless LAN
- ●Modules (Wireless, Camera, ect.)
- ●**Smart Phones** / Mobile phones

■FEATURES

Maximum Output Current	: 300mA
Input Voltage Range	: 1.6～5.5V
Output Voltages	: 2.0～4.0V (Accuracy ±1%) 1.2～1.95V (Accuracy ±20mV) 0.05V increments
Dropout Voltage	: 80mV@I_{OUT}=150mA (V_{OUT}=3.0V)
Low Power Consumption	: 100μA
Stand-by Current	: 0.1μA
High Ripple Rejection	: 80dB@f=1kHz
Protection Circuits	: Current Limit (400mA) Short Circuit Protection Over Heat Protection Inrush Current Protection
Low ESR Capacitors	: C_{IN} =1.0μF, C_L=1.0μF
CE Function	: Active High C_L High Speed Discharge
Operating Ambient Temperature	: -40℃～+85℃
Small Package	: LGA-4B01 (0.75mm×0.75mm×h 0.3MAX.)
Environmentally Friendly	: EU RoHS Compliant, Pb Free

■TYPICAL APPLICATION CIRCUIT

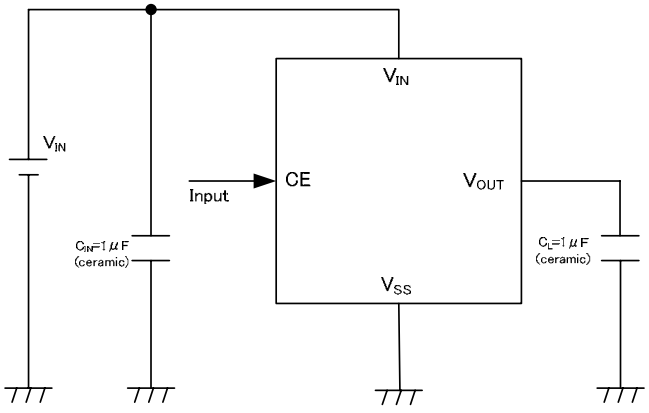

■TYPICAL PERFORMANCE CHARACTERISTICS

Load Transient Response

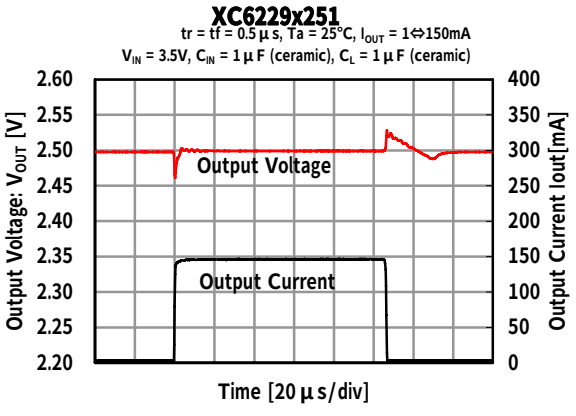

■BLOCK DIAGRAMS

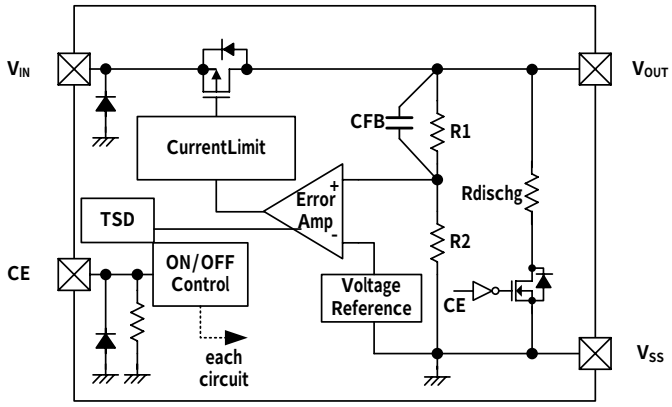

XC6229series Type D

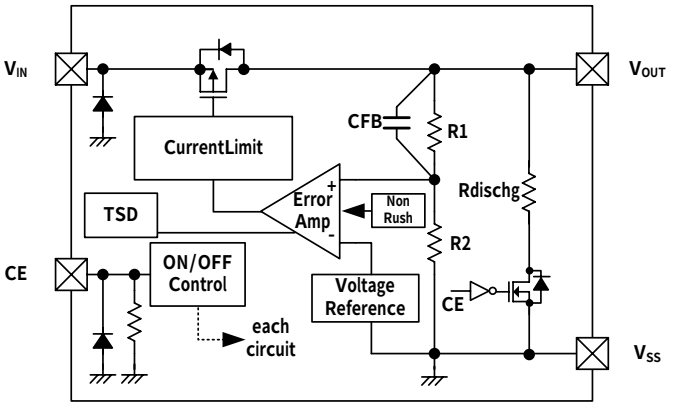

XC6229series Type H

* Diodes inside the circuits are ESD protection diodes and parasitic diodes.

■PRODUCT CLASSIFICATION

●Ordering Information

XC6229①②③④⑤⑥-⑦(*1)

DESIGNATOR	ITEM	SYMBOL	DESCRIPTION
①	Type of Regulator	D	CE Active High Without Inrush Current Protection With CE Pull-down, With C_L discharge
		H	CE Active High With Inrush Current Protection With CE Pull-down, With C_L discharge
②③	Output Voltage	12～40	ex.) 2.80V → ②=2, ③=8, ④=please see down below.
④	Output Voltage (2nd decimal place)	1	±1%, In case of 2nd decimal place 0 (ex.2.80V → ④=1)
		B	±1%, In case of 2nd decimal place 5 (ex.2.85V → ④=B)
⑤⑥-⑦(*1)	Package (Order Unit)	1R-G	LGA-4B01 (5,000 /Reel)

(*1) The "-G" suffix denotes Halogen and Antimony free as well as being fully EU RoHS compliant.

■PIN CONFIGURATION

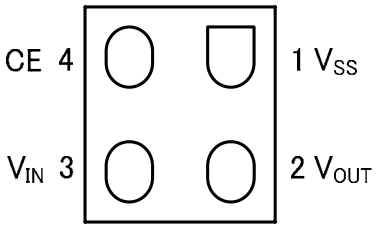

LGA-4B01
(BOTTOM VIEW)

■PIN ASSIGNMENT

PIN NUMBER LGA-4B01	PIN NAME	FUNCTIONS
3	V_{IN}	Power Input
2	V_{OUT}	Output
1	V_{SS}	Ground
4	CE	ON/OFF Control

■PIN FUNCTION ASSIGNMENT

CE LOGIC CONDITION	IC OPERATION
H	Operation ON
L	Operation OFF(Stand-by)
OPEN	*

* For D and H types, CE pin voltage is fixed as L level because of internal pull-down resister.

■ABSOLUTE MAXIMUM RATINGS

PARAMETER		SYMBOL	RATINGS	UNITS
Input Voltage		V_{IN}	V_{SS}-0.3～V_{SS}+7.0	V
Output Current		I_{OUT}	500 (*1)	mA
Output Voltage		V_{OUT}	V_{SS}-0.3～V_{IN}+0.3	V
CE Input Voltage		V_{CE}	V_{SS}-0.3～V_{SS}+7.0	V
Power Dissipation	LGA-4B01	Pd	150	mW
			600 (PCB mounted) (*2)	
Operating Ambient Temperature		Topr	-40～+85	℃
Storage Temperature		Tstg	-55～+125	℃

(*1) $I_{OUT} \leqq Pd / (V_{IN}-V_{OUT})$

(*2) This is a reference data taken by using the test board.

■ELECTRICAL CHARACTERISTICS

●XC6229 Series, Type D/H

Ta=25℃

PARAMETER	SYMBOL	CONDITIONS	MIN.	TYP.	MAX.	UNITS	CIRCUITS
Output Voltage	$V_{OUT(E)}$ (*1)	$V_{OUT(T)} \geqq 2.0V$, $V_{CE}=V_{IN}$, $I_{OUT}=10mA$	$V_{OUT(T)} \times 0.99$ (*2)	$V_{OUT(T)}$ (*2)	$V_{OUT(T)} \times 1.01$ (*2)	V	①
		$V_{OUT(T)} < 2.0V$, $V_{CE}=V_{IN}$, $I_{OUT}=10mA$ (*3)	$V_{OUT(T)}-20mV$ (*2)	$V_{OUT(T)}$ (*2)	$V_{OUT(T)}+20mV$ (*2)	V	
Maximum Output Current	I_{OUTMAX}	$V_{CE}=V_{IN}$	300	-	-	mA	①
Load Regulation	ΔV_{OUT}	$V_{CE}=V_{IN}$, 0.1mA≦I_{OUT}≦300mA	-	25	45	mV	①
Dropout Voltage	Vdif (*4)	$V_{CE}=V_{IN}$, $I_{OUT}=300mA$	-	E-1		mV	①
Supply Current	I_{SS}	$V_{CE}=V_{IN}$	-	100	220	μA	②
Stand-by Current	I_{STB}	$V_{CE}=V_{SS}$	-	0.01	0.4	μA	②
Line Regulation	$\Delta V_{OUT}/(\Delta V_{IN} \cdot V_{OUT})$	$V_{OUT(T)}+0.5V \leqq V_{IN} \leqq 5.5V$, $V_{CE}=V_{IN}$, $I_{OUT}=50mA$	-	0.01	0.1	%/V	①
Input Voltage	V_{IN}	-	1.6	-	5.5	V	①
Output Voltage Temperature Characteristics	$\Delta V_{OUT}/(\Delta Topr \cdot V_{OUT})$	$V_{CE}=V_{IN}$, $I_{OUT}=10mA$, -40℃≦Ta≦85℃	-	±100	-	ppm/℃	①
Power Supply Rejection Ratio	PSRR	$V_{OUT(T)} < 2.5V$, $V_{IN}=3.0V_{DC}+0.5Vp\text{-}p_{AC}$, $V_{CE}=V_{OUT(T)}+1.0V$, $I_{OUT}=30mA$, f=1kHz	-	80	-	dB	③
		$V_{OUT(T)} \geqq 2.5V$, $V_{IN}=\{V_{OUT(T)}+1.0\}V_{DC}+0.5Vp\text{-}p_{AC}$, $V_{CE}=V_{OUT(T)}+1.0V$, $I_{OUT}=30mA$, f=1kHz					
Current Limit	I_{LIM}	$V_{CE}=V_{IN}$	310	400	-	mA	①
Short Current	I_{SHORT}	$V_{CE}=V_{IN}$, $V_{OUT}=V_{SS}$	-	50	-	mA	①
CE High Level Voltage	V_{CEH}	-	1.0	-	5.5	V	④
CE Low Level Voltage	V_{CEL}	-	0	-	0.3	V	④
CE High Level Current	I_{CEH}	$V_{CE}=V_{IN}=5.5V$	3.0	5.5	9.0	μA	④
CE Low Level Current	I_{CEL}	$V_{CE}=V_{SS}$	-0.1	-	0.1	μA	④
C_L Discharge Resistance	R_{DCHG}	$V_{IN}=5.5V$, $V_{OUT}=2.0V$, $V_{CE}=V_{SS}$	-	300	-	Ω	①
Inrush Current (H Type)	Irush	$V_{IN}=5.5V$, $V_{CE}=0 \rightarrow 5.5V$	-	150	-	mA	⑤
Thermal Shutdown Detect Temperature	T_{TSD}	Junction Temperature	-	150	-	℃	①
Thermal Shutdown Release Temperature	T_{TSR}	Junction Temperature	-	120	-	℃	
Thermal Shutdown Hysteresis Width	T_{TSD} - T_{TSR}	Junction Temperature	-	30	-	℃	

NOTE:

Unless otherwise stated regarding input voltage conditions, $V_{IN}=V_{OUT(T)}+1.0V$.

(*1) $V_{OUT(E)}$: Effective output voltage
(i.e. the output voltage when "$V_{OUT(T)}+1.0V$" is provided at the V_{IN} pin while maintaining a certain I_{OUT} value.)

(*2) $V_{OUT(T)}$: Nominal output voltage

(*3) The standard output voltage is specified in $V_{OUT(T)} \pm 20mV$ where $V_{OUT(T)} < 2.0V$.

(*4) $Vdif = V_{IN1} - V_{OUT1}$ ($V_{IN1} \geqq 1.6V$)
V_{IN1}=The input voltage when V_{OUT1} appears as input voltage is gradually decreased.
V_{OUT1}=A voltage equal to 98% of the output voltage whenever an amply stabilized $V_{OUT(T)}+1.0V$ is input for every I_{OUT}.

■OUTPUT VOLTAGE CHART

●Voltage Chart 1

NOMINAL OUTPUT VOLTAGE (V)	OUTPUT VOLTAGE (V)		DROPOUT VOLTAGE (mV) E-1	
$V_{OUT(T)}$	$V_{OUT(E)}$		Vdif	
	MIN.	MAX.	TYP.	MAX.
1.20	1.1800	1.2200	470	625
1.25	1.2300	1.2700		
1.30	1.2800	1.3200	420	575
1.35	1.3300	1.3700		
1.40	1.3800	1.4200	380	505
1.45	1.4300	1.4700		
1.50	1.4800	1.5200	350	455
1.55	1.5300	1.5700		
1.60	1.5800	1.6200	320	440
1.65	1.6300	1.6700		
1.70	1.6800	1.7200		
1.75	1.7300	1.7700		
1.80	1.7800	1.8200	260	380
1.85	1.8300	1.8700		
1.90	1.8800	1.9200		
1.95	1.9300	1.9700		
2.00	1.9800	2.0200	230	340
2.05	2.0295	2.0705		
2.10	2.0790	2.1210		
2.15	2.1285	2.1715		
2.20	2.1780	2.2220		
2.25	2.2275	2.2725		
2.30	2.2770	2.3230		
2.35	2.3265	2.3735		
2.40	2.3760	2.4240		
2.45	2.4255	2.4745		
2.50	2.4750	2.5250	190	300
2.55	2.5245	2.5755		
2.60	2.5740	2.6260		
2.65	2.6235	2.6765		
2.70	2.6730	2.7270		
2.75	2.7225	2.7775		
2.80	2.7720	2.8280		
2.85	2.8215	2.8785		
2.90	2.8710	2.9290		
2.95	2.9205	2.9795		

■OUTPUT VOLTAGE CHART (Continued)

●Voltage Chart 2

NOMINAL OUTPUT VOLTAGE (V)	OUTPUT VOLTAGE (V)		DROPOUT VOLTAGE (mV) E-1	
$V_{OUT(T)}$	$V_{OUT(E)}$		Vdif	
	MIN.	MAX.	TYP.	MAX.
3.00	2.9700	3.0300		
3.05	3.0195	3.0805		
3.10	3.0690	3.1310		
3.15	3.1185	3.1815		
3.20	3.1680	3.2320		
3.25	3.2175	3.2825		
3.30	3.2670	3.3330		
3.35	3.3165	3.3835		
3.40	3.3660	3.4340		
3.45	3.4155	3.4845		
3.50	3.4650	3.5350	160	260
3.55	3.5145	3.5855		
3.60	3.5640	3.6360		
3.65	3.6135	3.6865		
3.70	3.6630	3.7370		
3.75	3.7125	3.7875		
3.80	3.7620	3.8380		
3.85	3.8115	3.8885		
3.90	3.8610	3.9390		
3.95	3.9105	3.9895		
4.00	3.9600	4.0400		

OPERATIONAL EXPLANATION

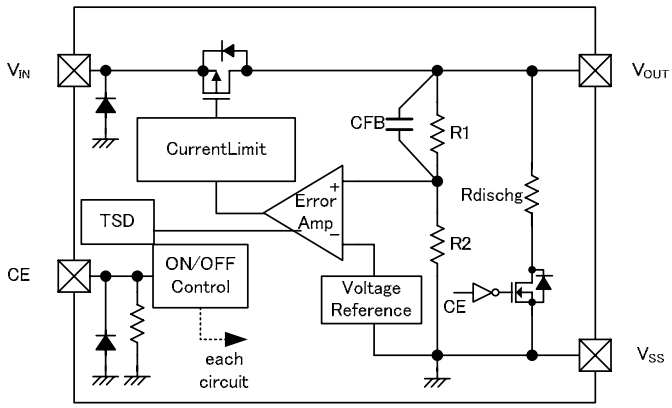

XC6229 Series, Type D

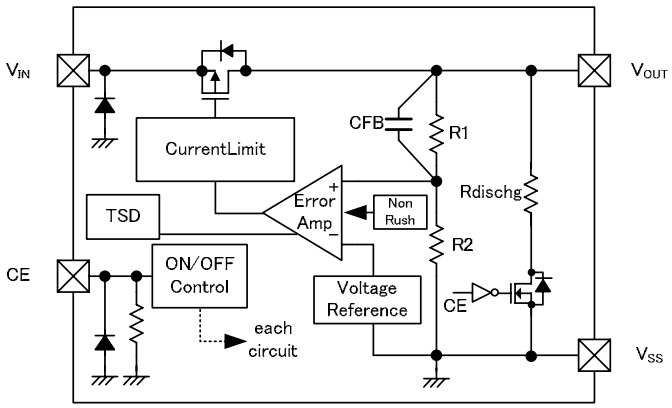

XC6229 Series, Type H

The voltage divided by resistors R1 & R2 is compared with the internal reference voltage by the error amplifier. The P-channel MOSFET which is connected to the V_{OUT} pin is then driven by the subsequent output signal. The output voltage at the V_{OUT} pin is controlled and stabilized by a system of negative feedback. The current limit circuit and short circuit protection operate in relation to the level of output current and heat dissipation. Further, the IC's internal circuitry can be shutdown via the CE pin signal.

<Low ESR Capacitor>

The XC6229 series needs an output capacitor C_L for phase compensation. Please place an output capacitor (C_L) at the output pin (V_{OUT}) and the ground pin (V_{SS}) as close as possible. Please use the output capacitor (C_L) is 1.0μF or larger. For a stable power input, please connect an input capacitor (C_{IN}) of 1.0μF between the V_{IN} pin and the V_{SS} pin.

<Current Limiter, Short-Circuit Protection>

The XC6229 has current limiter and droop shape of fold-back circuit. When the load current reaches the current limit, the droop current limiter circuit operates and the output voltage drops. When the output voltage dropped, the fold-back circuit operates and the output current goes to decrease. The output current finally falls at the level of 50mA when the output pin is short-circuited.

<CE Pin>

The IC's internal circuitry can be shutdown via the signal from the CE pin. In shutdown mode, the XC6229 series enables the electric charge at the output capacitor (C_L) to be discharged via the internal switch located between the V_{OUT} and V_{SS} pins, and as a result the V_{OUT} pin quickly returns to the V_{SS} level. The XC6229 series has a pull-down resistor at the CE pin inside, so that the CE pin input current flows.

<Thermal Shutdown>

When the junction temperature of the built-in driver transistor reaches the temperature limit, the thermal shutdown circuit operates and the driver transistor will be set to OFF. The IC resumes its operation when the thermal shutdown function is released and the IC's operation is automatically restored because the junction temperature drops to the level of the thermal shutdown release voltage.

<Inrush Current Protection>

The inrush current protection circuit is built in the XC6229 type H.

When the IC starts to operate, the protection circuit limits the inrush current from input pin (V_{IN}) to output pin (V_{OUT}) to charge C_L capacitor.

■NOTES ON USE

1. For temporary, transitional voltage drop or voltage rising phenomenon, the IC is liable to malfunction should the ratings be exceeded.

2. Where wiring impedance is high, operations may become unstable due to the noise and/or phase lag depending on output current. Please strengthen V_{IN} and V_{SS} wiring in particular.

3. The input capacitor C_{IN} and the output capacitor C_L should be placed to the as close as possible with a shorter wiring.

4. The type H is controlled with constant current start-up. Start-up sequence control is requested to draw a load current after the output voltage is raised up to around the internally fixed nominal output voltage.

5. Torex places an importance on improving our products and its reliability.
However, by any possibility, we would request user fail-safe design and post-aging treatment on system or equipment.

■TEST CIRCUITS

●Circuit ①

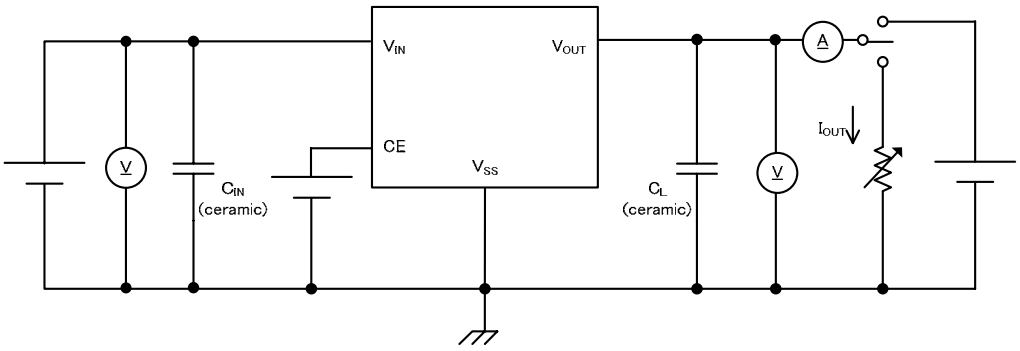

●Circuit ②

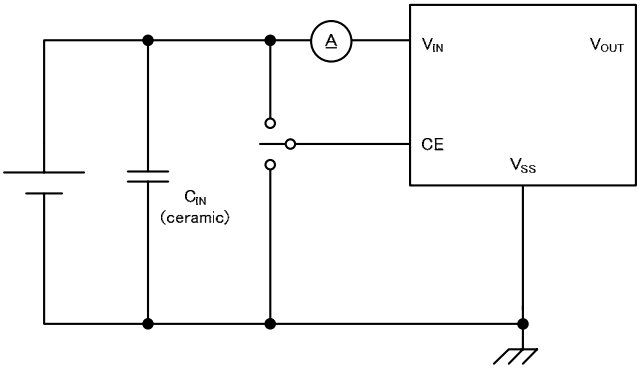

●Circuit ③

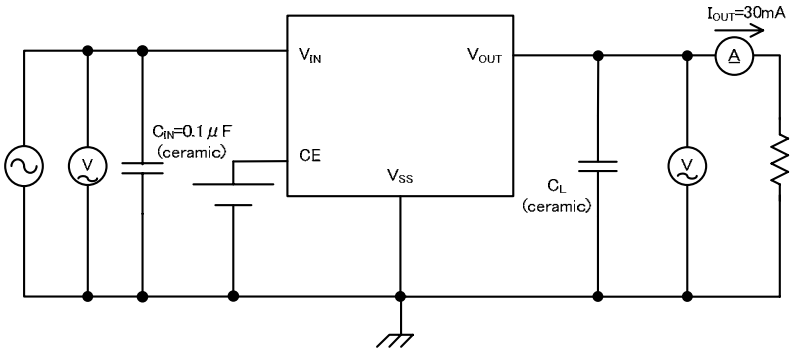

■TEST CIRCUITS (Continued)

●Circuit ④

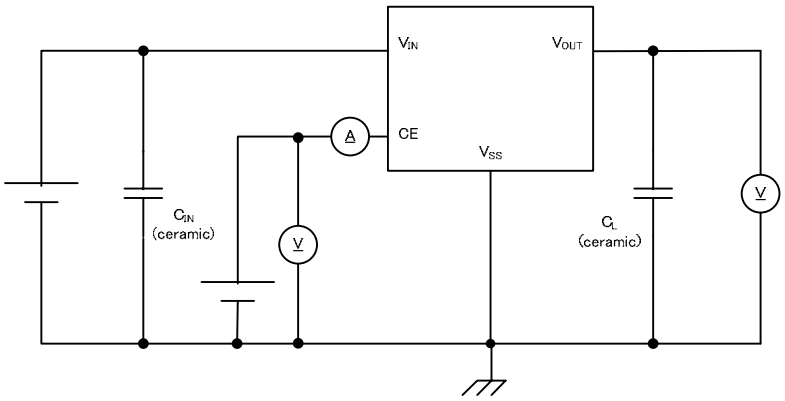

●Circuit ⑤

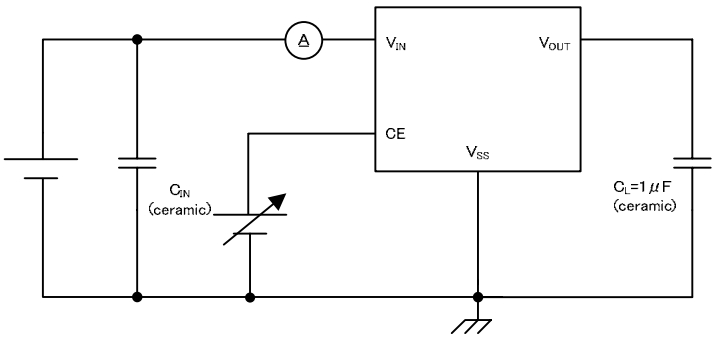

■TYPICAL PERFORMANCE CHARACTERISTICS

(1) Output Voltage vs. Output Current

XC6229x121

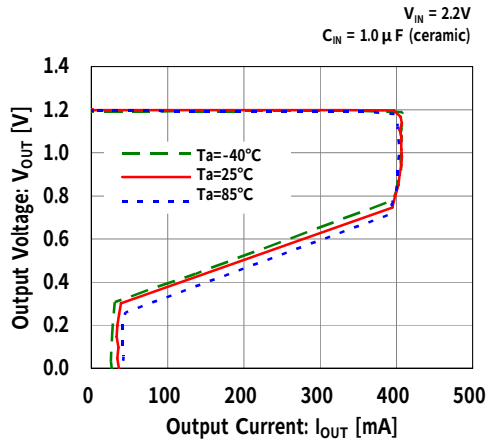

XC6229x121

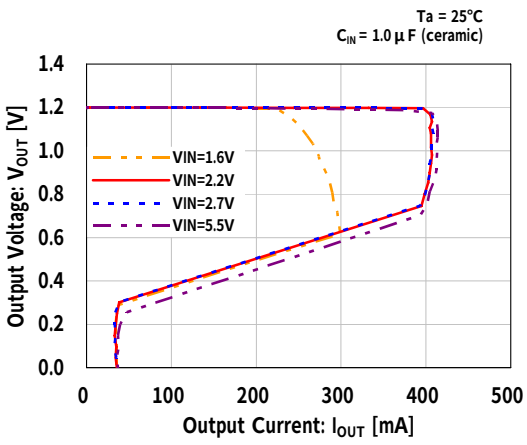

XC6229x181

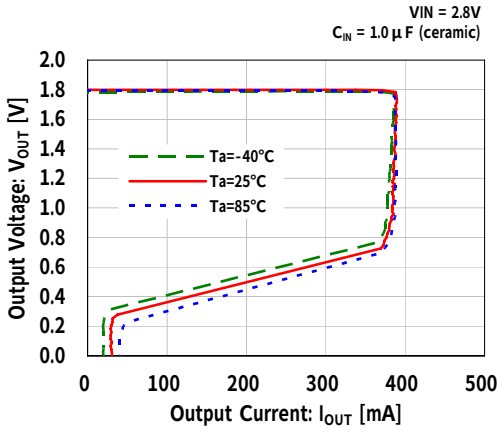

XC6229x181

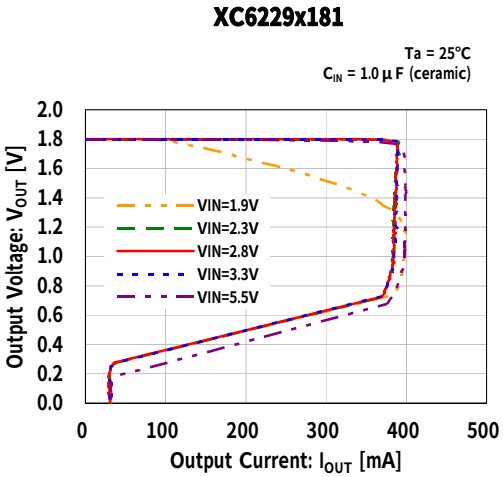

XC6229x251

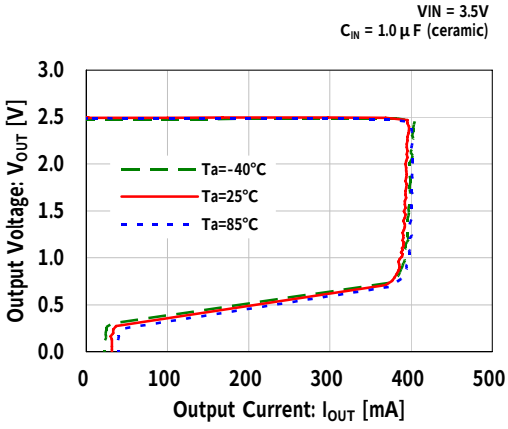

XC6229x251

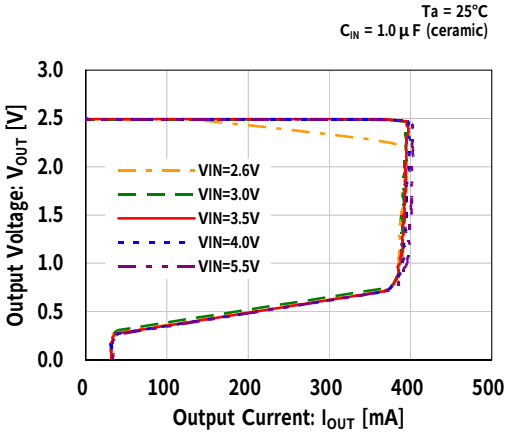

■TYPICAL PERFORMANCE CHARACTERISTICS (Continued)

(1) Output Voltage vs. Output Current (Continued)

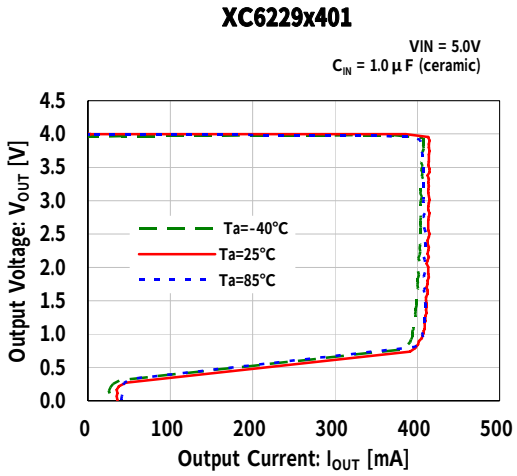

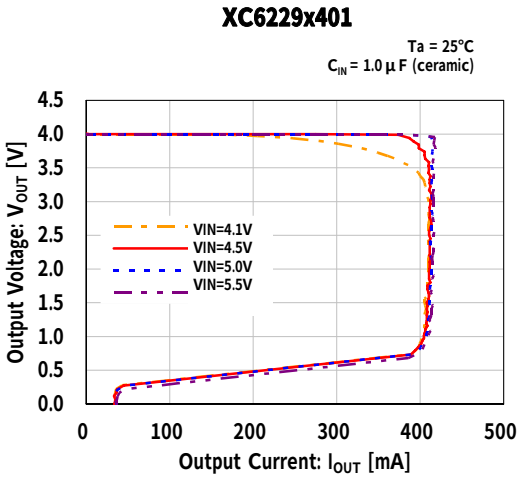

(2) Output Voltage vs. Input Voltage

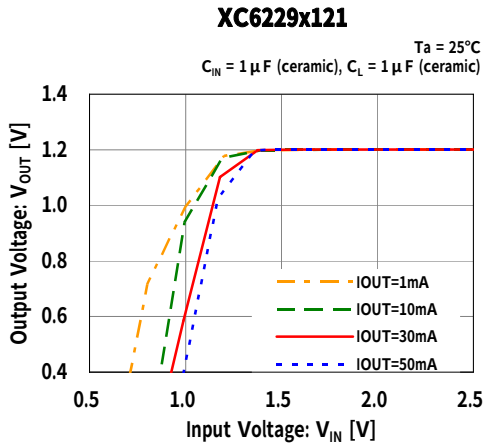

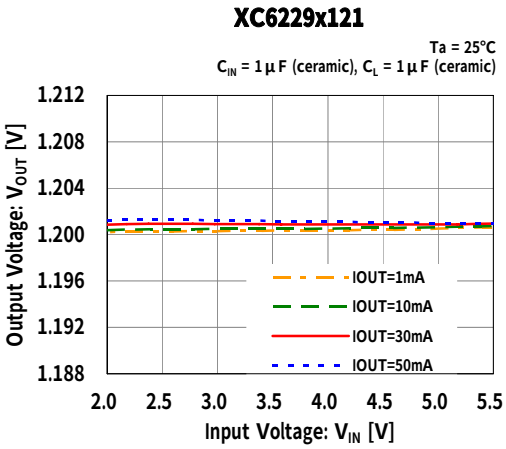

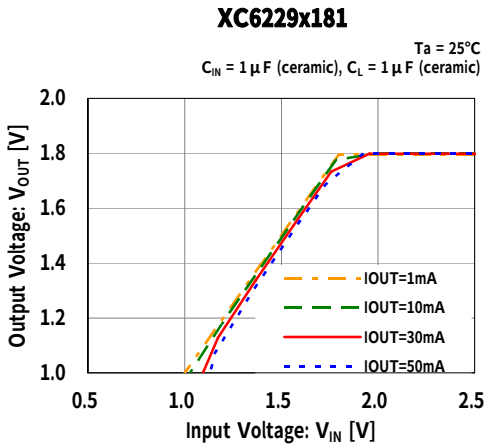

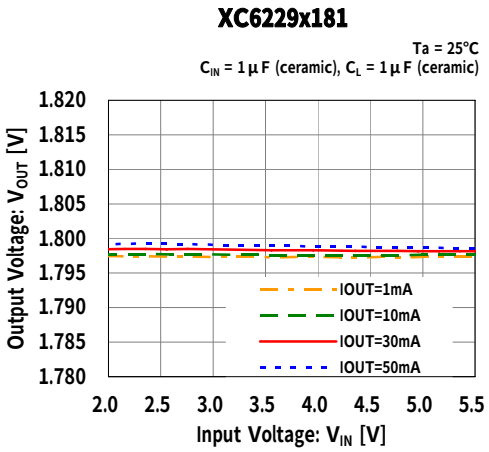

■TYPICAL PERFORMANCE CHARACTERISTICS (Continued)

(2) Output Voltage vs. Input Voltage (Continued)

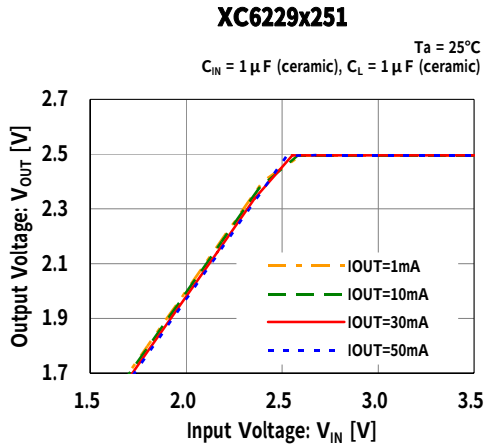

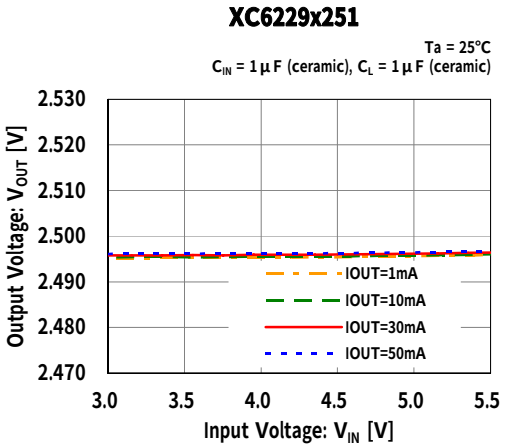

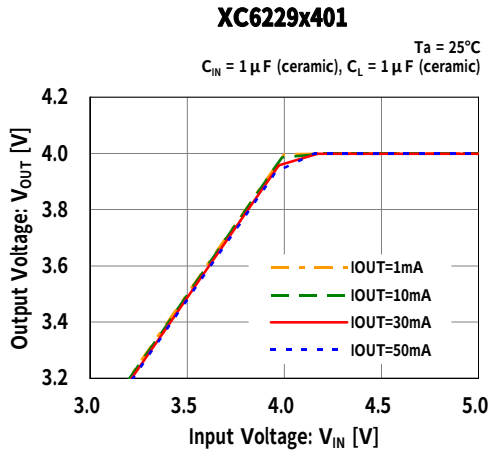

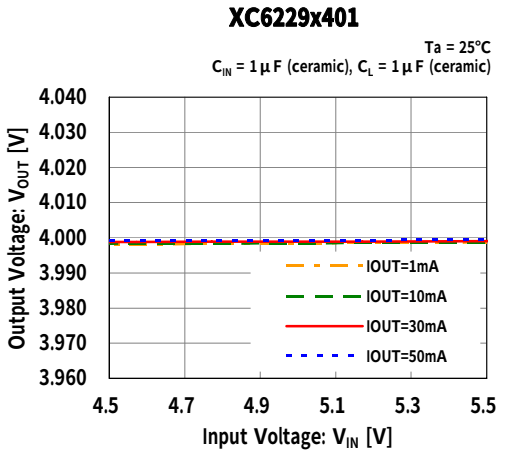

(3) Dropout Voltage vs. Output Current

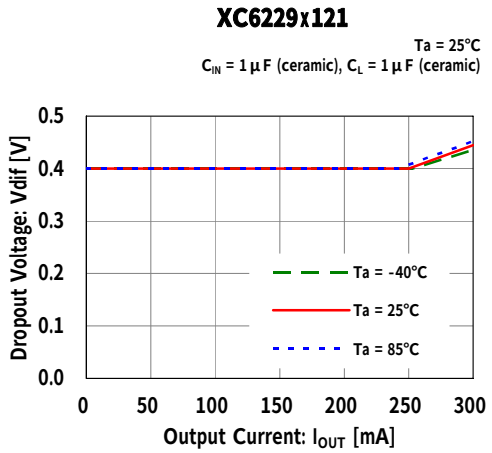

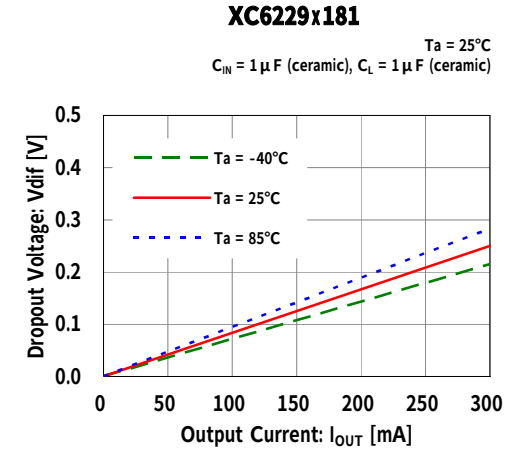

■TYPICAL PERFORMANCE CHARACTERISTICS (Continued)

(3) Dropout Voltage vs. Output Current (Continued)

XC6229x251

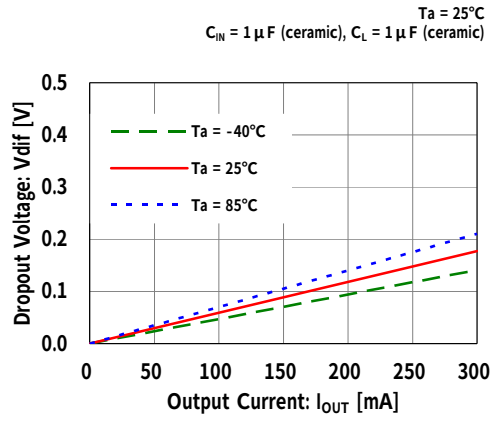

XC6229x401

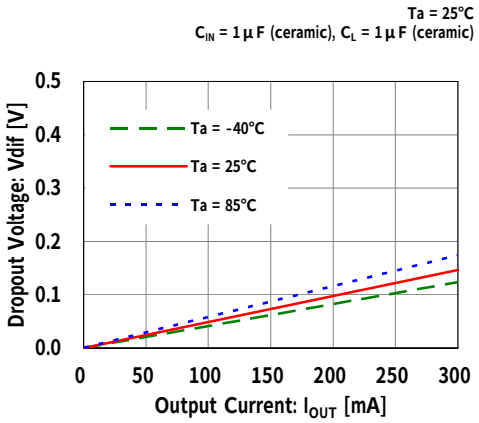

(4) Supply Current vs. Input Voltage

XC6229x121

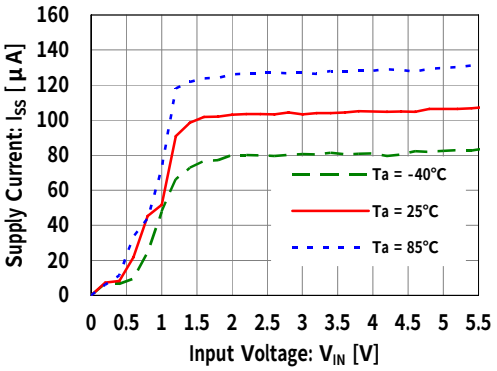

XC6229x181

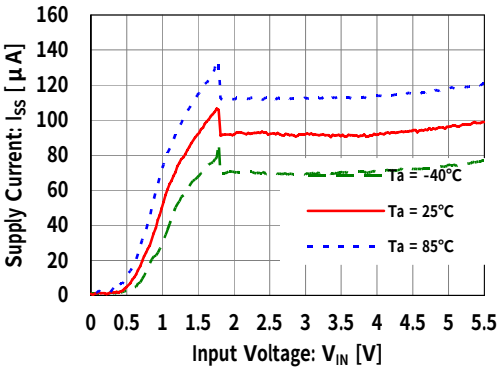

XC6229x251

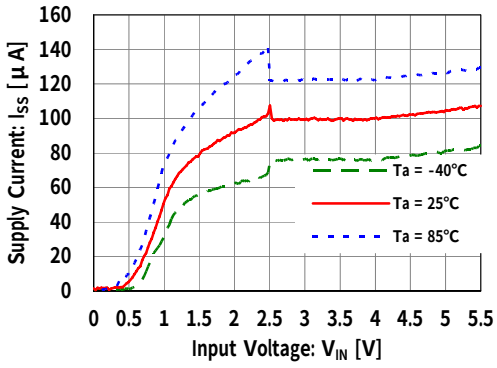

XC6229x401

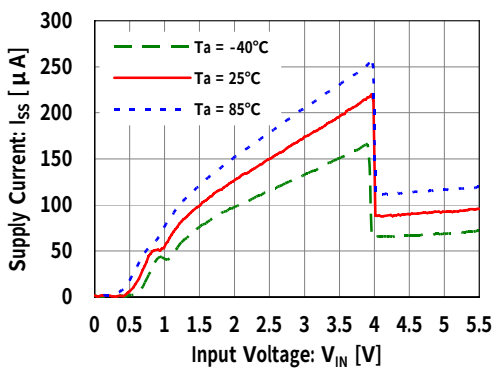

■TYPICAL PERFORMANCE CHARACTERISTICS (Continued)

(5) Output Voltage vs. Ambient Temperature

XC6229x121

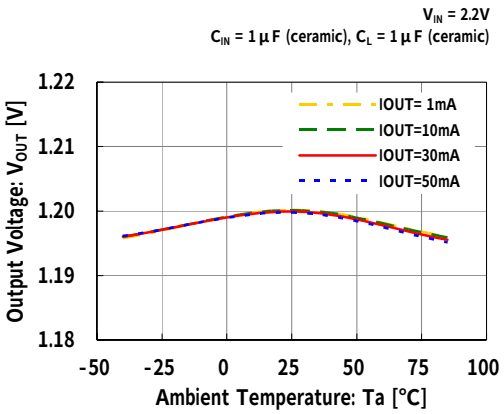

XC6229x181

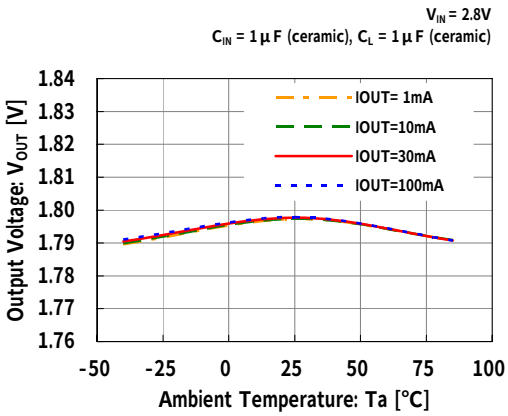

XC6229x251

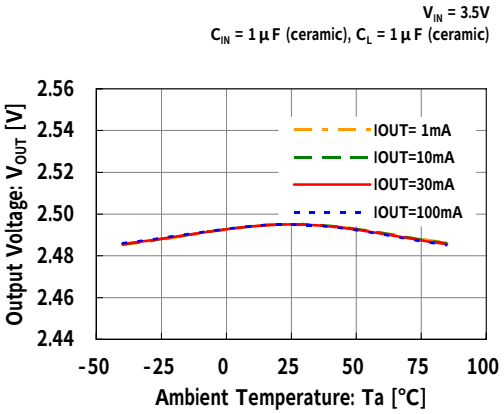

XC6229x401

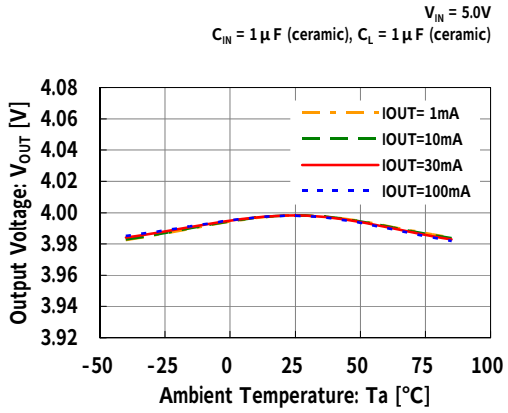

(6) Rising Response Time

XC6229x121

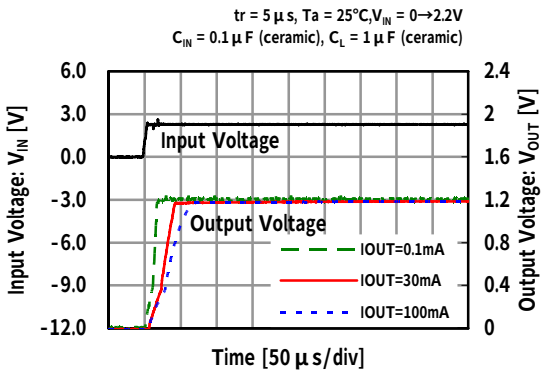

XC6229x181

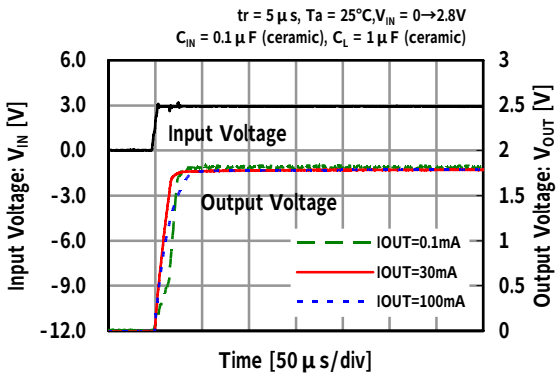

■TYPICAL PERFORMANCE CHARACTERISTICS (Continued)

(6) Rising Response Time (Continued)

XC6229x251

tr = 5μs, Ta = 25°C, V_{IN} = 0→3.5V
C_{IN} = 0.1μF (ceramic), C_L = 1μF (ceramic)

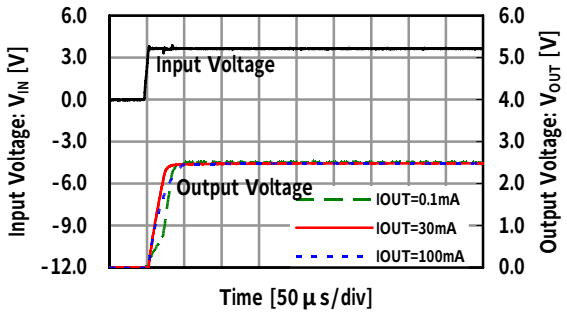

XC6229x401

tr = 5μs, Ta = 25°C, V_{IN} = 0→5.0V
C_{IN} = 0.1μF (ceramic), C_L = 1μF (ceramic)

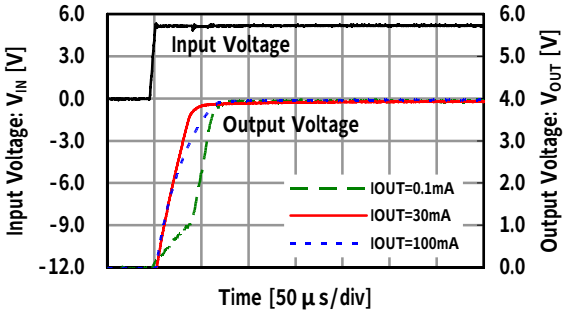

(7) Input Transient Response

XC6229x121

tr = tf = 5μs, Ta = 25°C, V_{IN} = 2.2V⇔3.2V
C_{IN} = 0.1μF (ceramic), C_L = 1.0μF (ceramic)

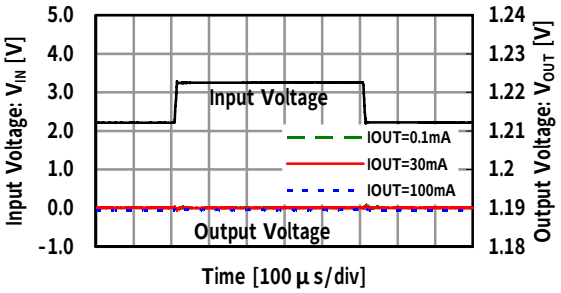

XC6229x181

tr = tf = 5μs, Ta = 25°C, V_{IN} = 2.8V⇔3.8V
C_{IN} = 0.1μF (ceramic), C_L = 1.0μF (ceramic)

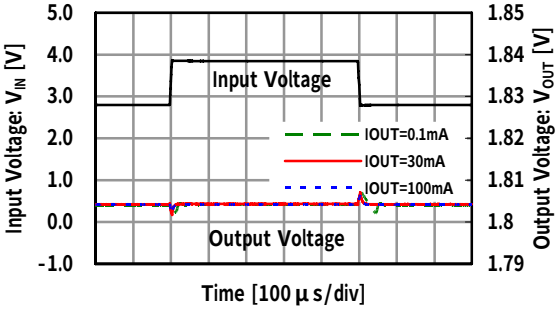

XC6229x251

tr = tf = 5μs, Ta = 25°C, V_{IN} = 3.5V⇔4.5V
C_{IN} = 0.1μF (ceramic), C_L = 1.0μF (ceramic)

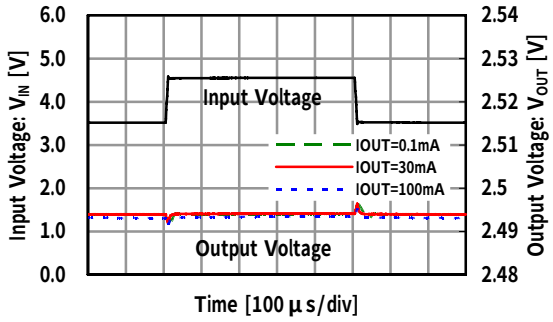

XC6229x401

tr = tf = 5μs, Ta = 25°C, V_{IN} = 4.5V⇔5.5V
C_{IN} = 0.1μF (ceramic), C_L = 1.0μF (ceramic)

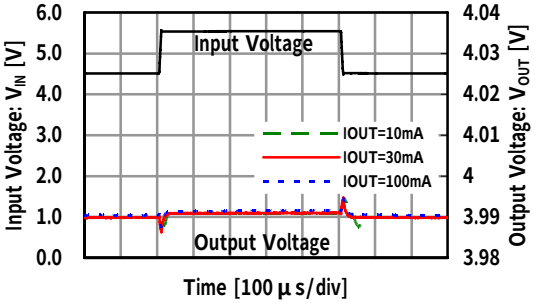

■TYPICAL PERFORMANCE CHARACTERISTICS (Continued)

(8) Load Transient Response (tr=tf=0.5μs)

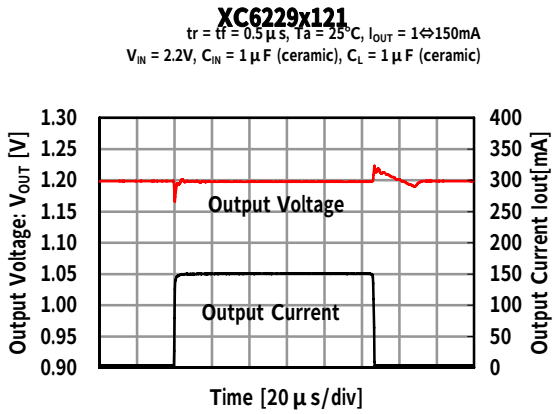

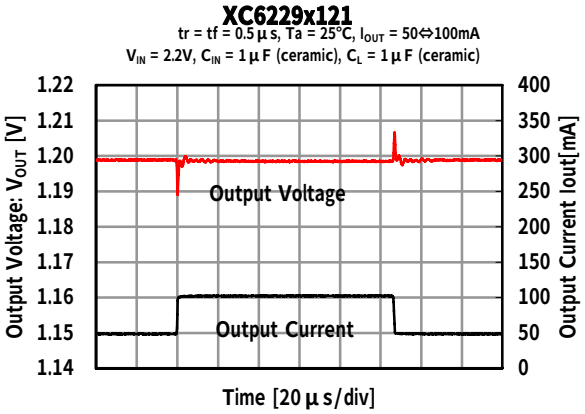

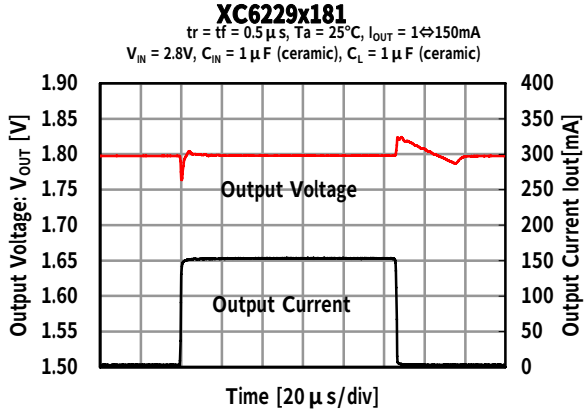

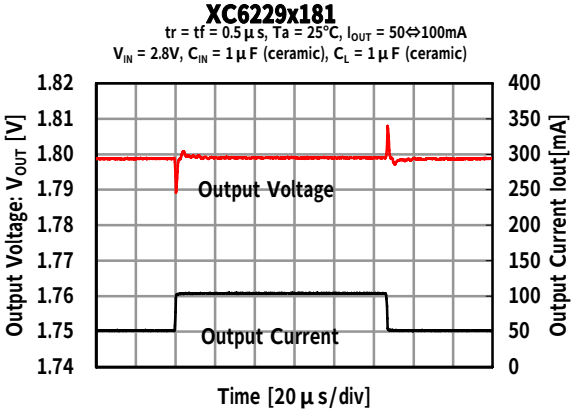

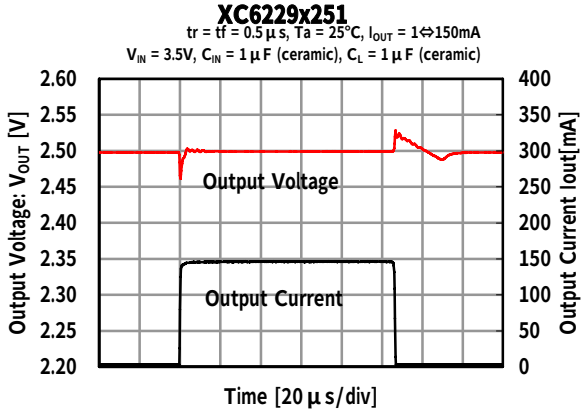

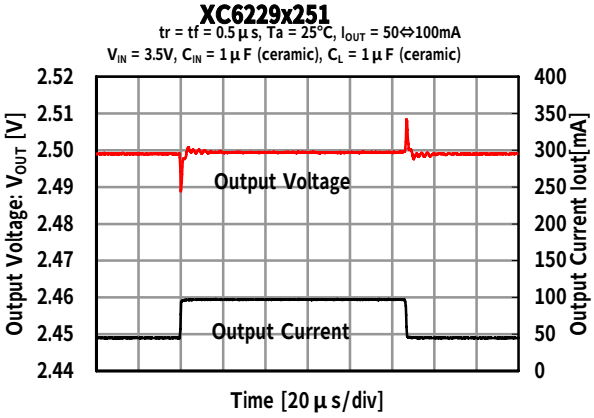

■TYPICAL PERFORMANCE CHARACTERISTICS (Continued)

(8) Load Transient Response (tr=tf=0.5μs) (Continued)

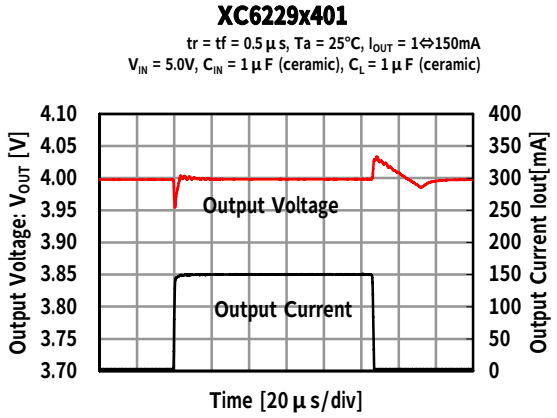

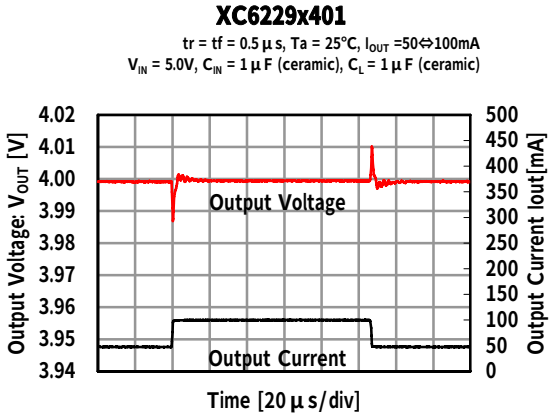

(8) Load Transient Response (tr=tf=5μs) (Continued)

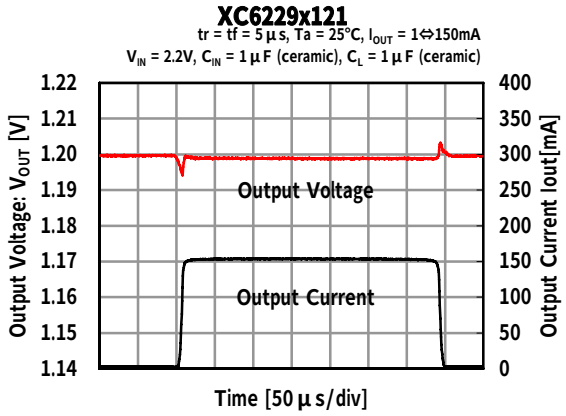

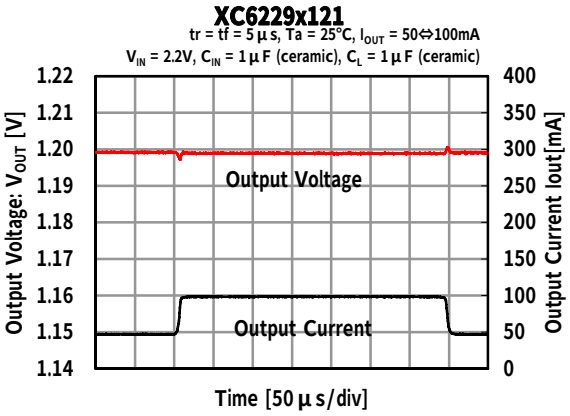

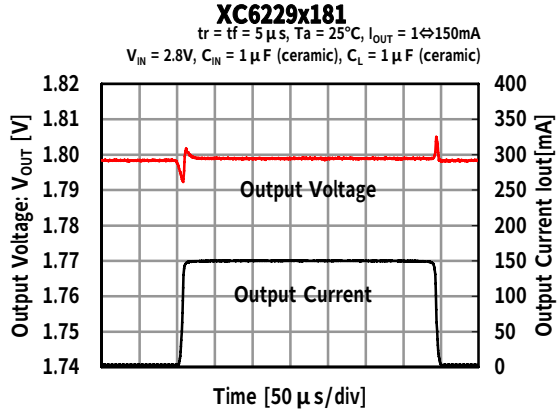

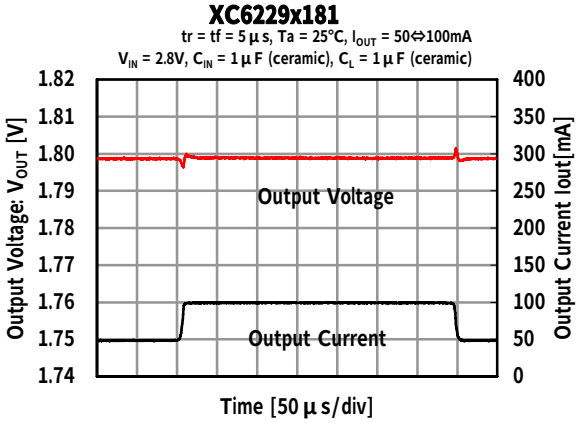

■TYPICAL PERFORMANCE CHARACTERISTICS (Continued)

(8) Load Transient Response (tr=tf=5μs) (Continued)

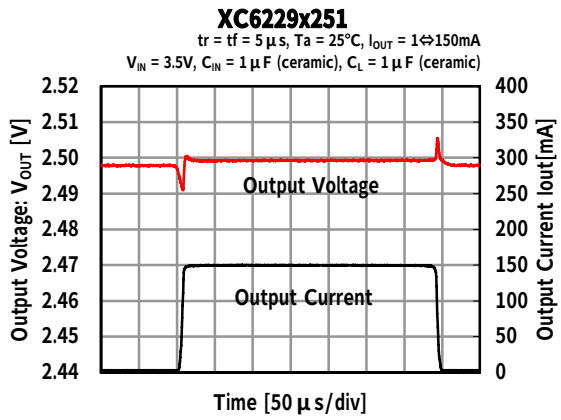

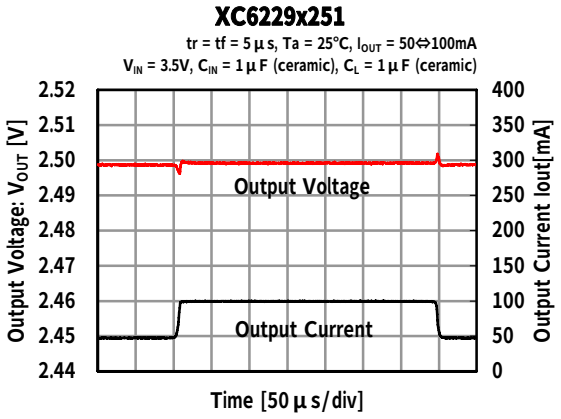

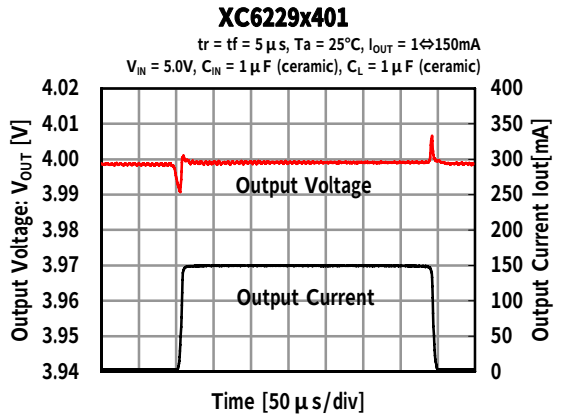

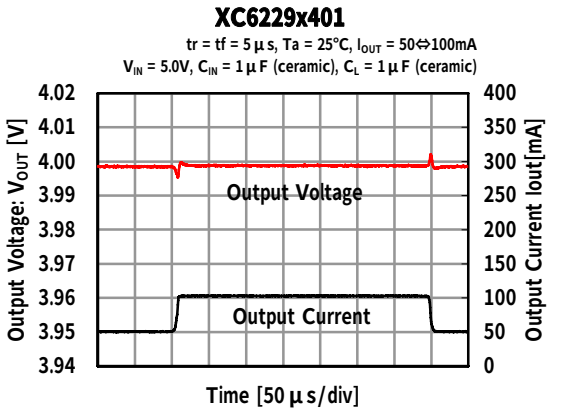

(9) CE Rising Response Time (Type D)

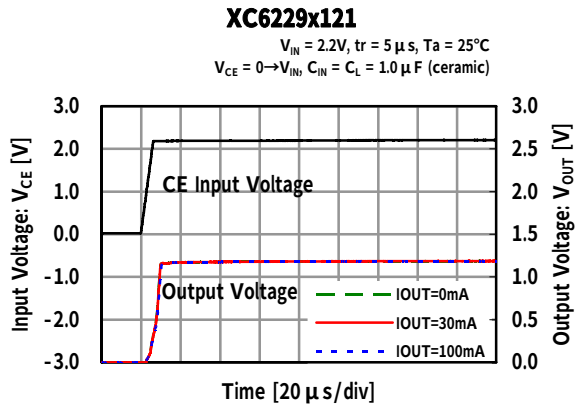

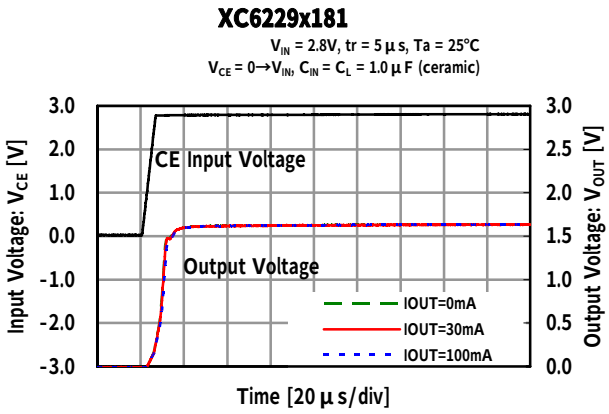

■TYPICAL PERFORMANCE CHARACTERISTICS (Continued)

(9) CE Rising Response Time (Type D) (Continued)

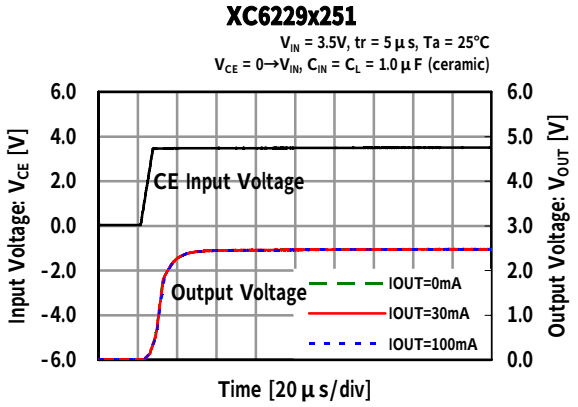

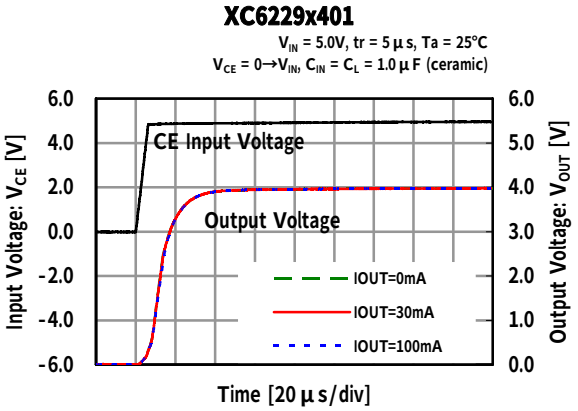

(9) CE Rising Response Time (Type H) (Continued)

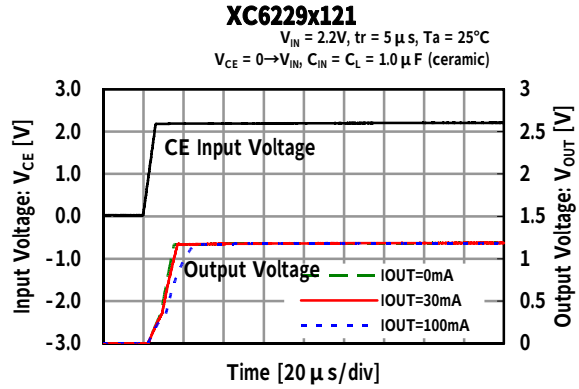

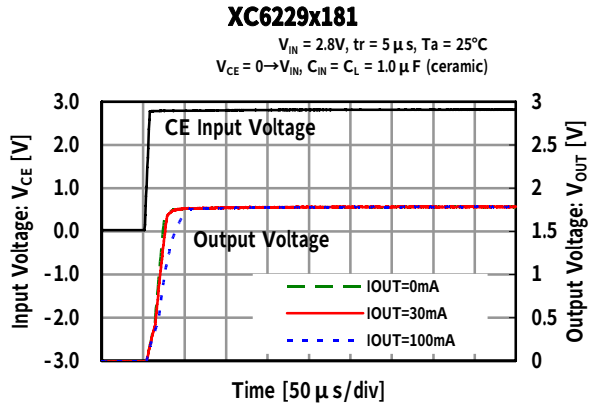

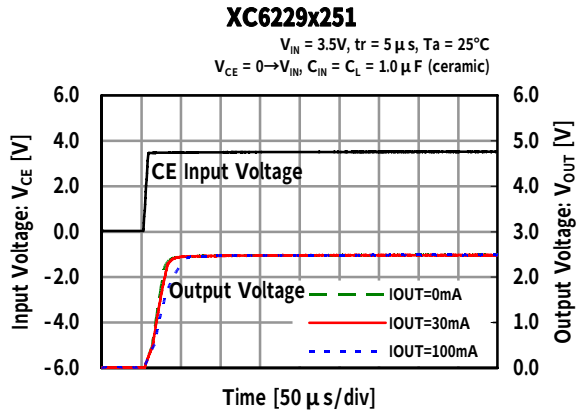

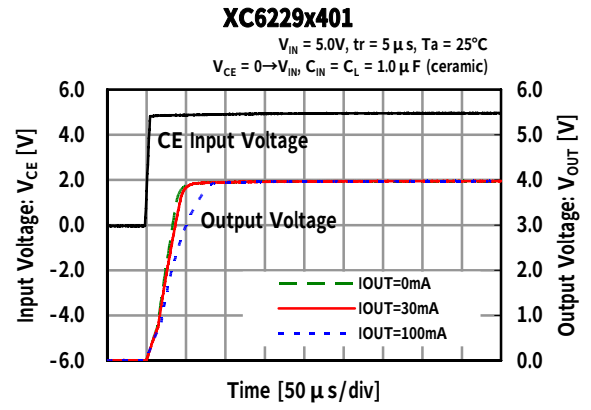

■TYPICAL PERFORMANCE CHARACTERISTICS (Continued)

(10) Inrush Current Response Time (Type H)

XC6229x121

V_{IN} = 2.2V, tr = 5μs, Ta = 25°C
V_{CE} = 0→V_{IN}, C_{IN} = C_L = 1.0μF (ceramic)

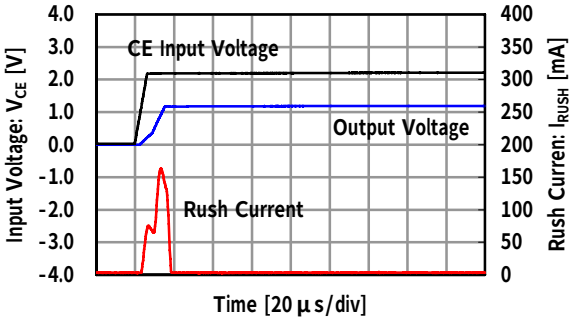

XC6229x181

V_{IN} = 2.8V, tr = 5μs, Ta = 25°C
V_{CE} = 0→V_{IN}, C_{IN} = C_L = 1.0μF (ceramic)

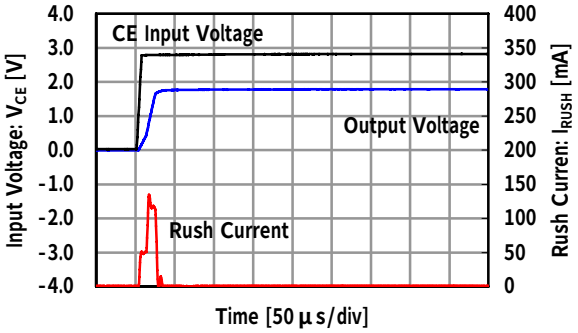

XC6229x251

V_{IN} = 3.5V, tr = 5μs, Ta = 25°C
V_{CE} = 0→V_{IN}, C_{IN} = C_L = 1.0μF (ceramic)

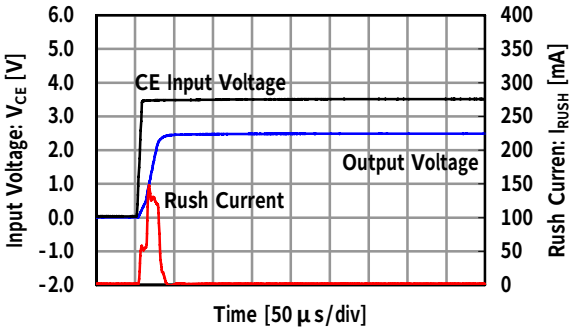

XC6229x401

V_{IN} = 5.0V, tr = 5μs, Ta = 25°C
V_{CE} = 0→V_{IN}, C_{IN} = C_L = 1.0μF (ceramic)

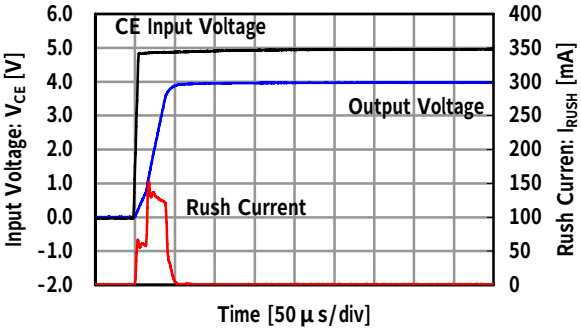

■TYPICAL PERFORMANCE CHARACTERISTICS (Continued)

(11) Ripple Rejection Rate

XC6229x121

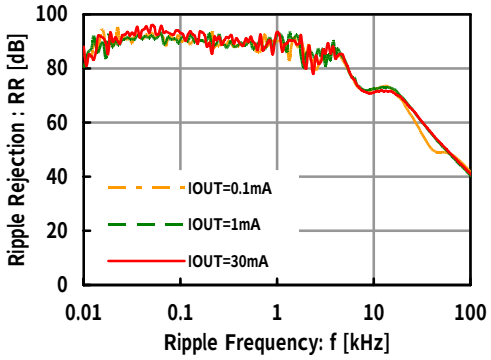

XC6229x181

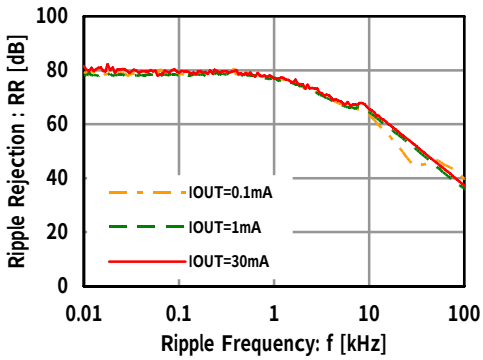

XC6229x251

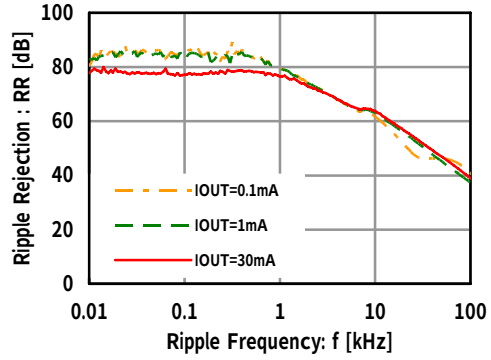

XC6229x331

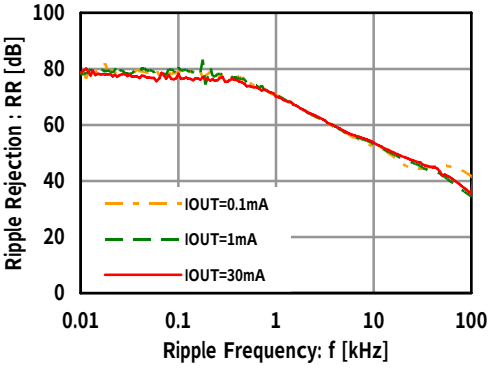

(12) Output Noise Density

XC6229x121

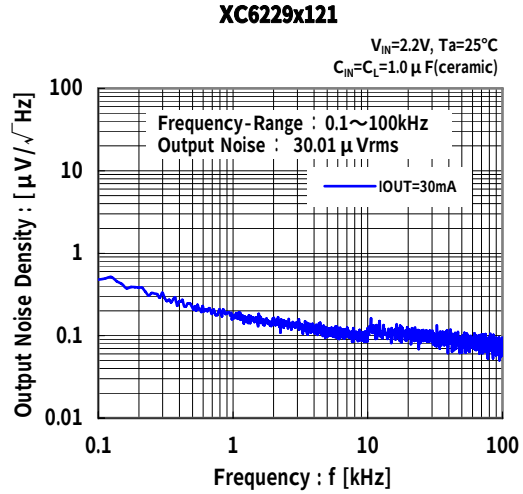

XC6229x331

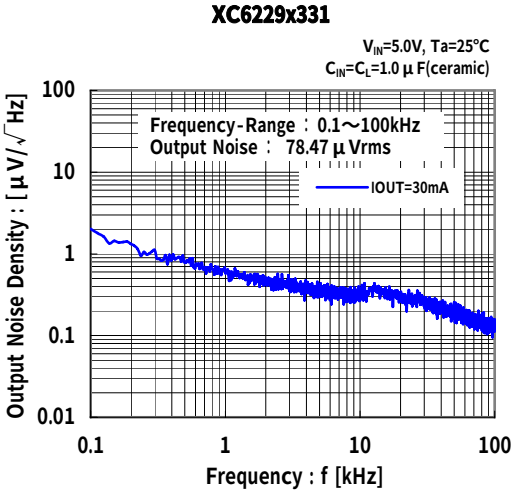

■PACKAGING INFORMATION

LGA-4B01

(unit：mm)

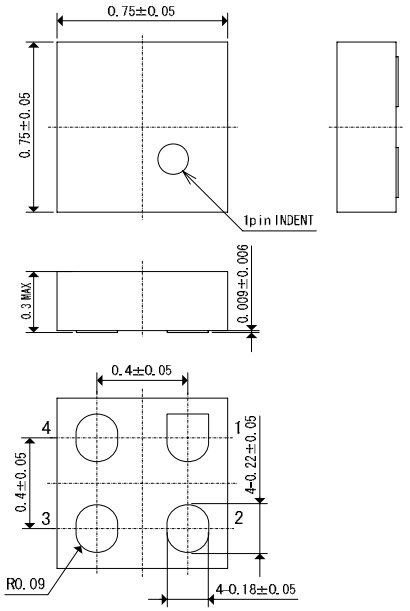

●LGA-4B01 Reference Pattern Layout

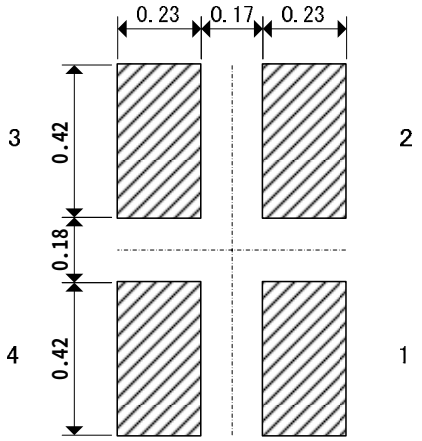

●LGA-4B01 Reference Metal Mask Design

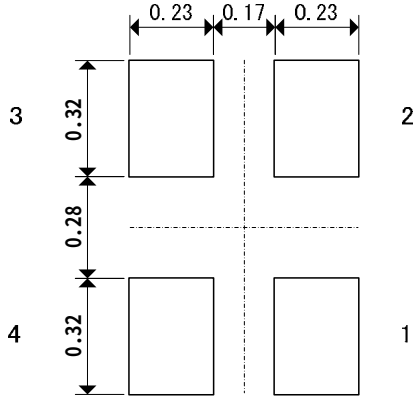

■PACKAGING INFORMATION (Continued)

● LGA-4B01 Power Dissipation

Power dissipation data for the LGA-4B01 is shown in this page.
The value of power dissipation varies with the mount board conditions.
Please use this data as the reference data taken in the following condition.

1. Measurement Condition

Condition	: Mount on a board
Ambient	: Natural convection
Soldering	: Lead (Pb) free
Board	: 40 x 40 mm (1600mm^2 in one side)
	Copper (Cu) traces occupy 50% of the front and 50% of the back.
	The copper area is divided into four block, one block is 12.5% of total.
	Each terminal connects one copper block in the front and one in the back.
Material	: Glass Epoxy (FR-4)
Thickness	: 1.6 mm
Through-hole	: 4 x 0.4 Diameter

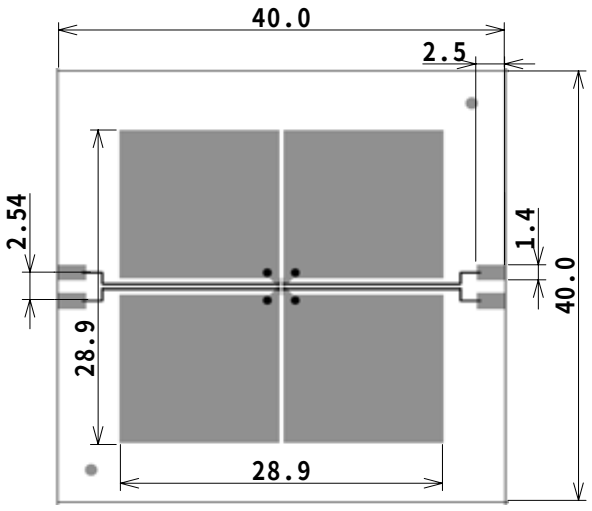

Evaluation Board (Unit: mm)

2. Power Dissipation vs. Ambient Temperature

Board Mount (Tj max = 125℃)

Ambient Temperature (℃)	Power Dissipation Pd (mW)	Thermal Resistance (℃/W)
25	600	166.67
85	240	

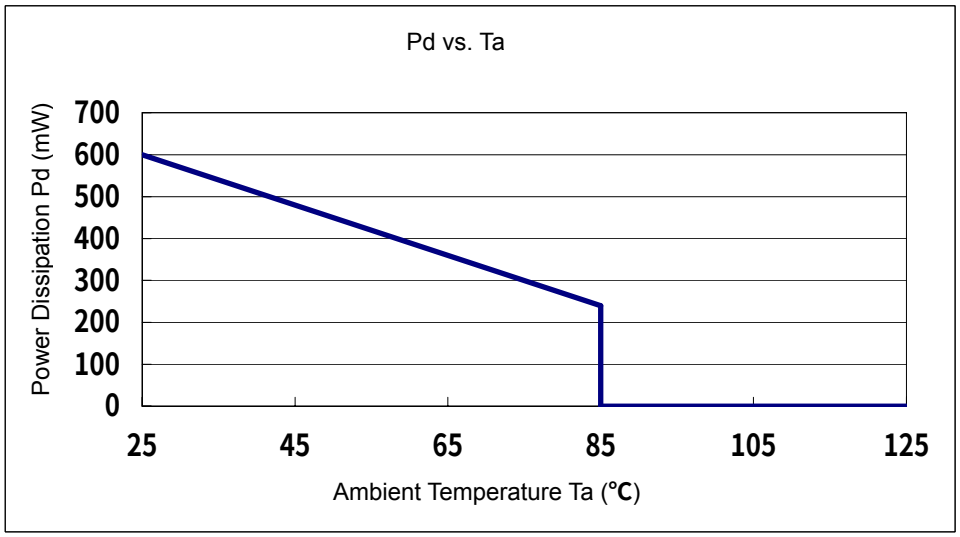

■MARKING RULE

●LGA-4B01

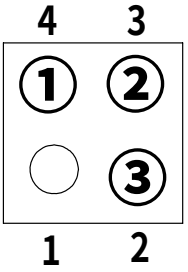

LGA-4B01
(TOP VIEW)

① represents type of regulator and output voltage range.

MARK	TYPE	VOLTAGE RANGE	PRODUCT SERIES
0	D	1.2～2.6	XC6229D1211*-G ～ XC6229D2611*-G
1		2.65～4.0	XC6229D26B1*-G ～ XC6229D4011*-G
2	H	1.2～2.6	XC6229H1211*-G ～ XC6229H2611*-G
3		2.65～4.0	XC6229H26B1*-G ～ XC6229H4011*-G

② represents output voltage.

MARK	OUTPUT VOLTAGE (V)		MARK	OUTPUT VOLTAGE (V)		MARK	OUTPUT VOLTAGE (V)	
0	1.2	2.65	A	1.7	3.15	N	2.2	3.65
1	1.25	2.7	B	1.75	3.2	P	2.25	3.7
2	1.3	2.75	C	1.8	3.25	R	2.3	3.75
3	1.35	2.8	D	1.85	3.3	S	2.35	3.8
4	1.4	2.85	E	1.9	3.35	T	2.4	3.85
5	1.45	2.9	F	1.95	3.4	U	2.45	3.9
6	1.5	2.95	H	2.0	3.45	V	2.5	3.95
7	1.55	3.0	K	2.05	3.5	X	2.55	4.0
8	1.6	3.05	L	2.1	3.55	Y	2.6	
9	1.65	3.1	M	2.15	3.6			

③ represents production lot number.
0～9, A～Z in order.
(G, I, J, O, Q, W excepted)
*No character inversion used.

1. The products and product specifications contained herein are subject to change without notice to improve performance characteristics. Consult us, or our representatives before use, to confirm that the information in this datasheet is up to date.
2. We assume no responsibility for any infringement of patents, patent rights, or other rights arising from the use of any information and circuitry in this datasheet.
3. Please ensure suitable shipping controls (including fail-safe designs and aging protection) are in force for equipment employing products listed in this datasheet.
4. The products in this datasheet are not developed, designed, or approved for use with such equipment whose failure of malfunction can be reasonably expected to directly endanger the life of, or cause significant injury to, the user.
   (e.g. Atomic energy; aerospace; transport; combustion and associated safety equipment thereof.)
5. Please use the products listed in this datasheet within the specified ranges.
   Should you wish to use the products under conditions exceeding the specifications, please consult us or our representatives.
6. We assume no responsibility for damage or loss due to abnormal use.
7. All rights reserved. No part of this datasheet may be copied or reproduced without the prior permission of TOREX SEMICONDUCTOR LTD.

TOREX SEMICONDUCTOR LTD.