XC164N-32F/32R

16-Bit Single-Chip Microcontroller with C166SV2 Core



Microcontrollers

Never stop thinking

Edition 2006-08

Published by
Infineon Technologies AG
81726 München, Germany

© Infineon Technologies AG 2006.
All Rights Reserved.

Legal Disclaimer

The information given in this document shall in no event be regarded as a guarantee of conditions or characteristics (“Beschaffenheitsgarantie”). With respect to any examples or hints given herein, any typical values stated herein and/or any information regarding the application of the device, Infineon Technologies hereby disclaims any and all warranties and liabilities of any kind, including without limitation warranties of non-infringement of intellectual property rights of any third party.

Information

For further information on technology, delivery terms and conditions and prices please contact your nearest Infineon Technologies Office (**www.infineon.com**).

Warnings

Due to technical requirements components may contain dangerous substances. For information on the types in question please contact your nearest Infineon Technologies Office.

Infineon Technologies Components may only be used in life-support devices or systems with the express written approval of Infineon Technologies, if a failure of such components can reasonably be expected to cause the failure of that life-support device or system, or to affect the safety or effectiveness of that device or system. Life support devices or systems are intended to be implanted in the human body, or to support and/or maintain and sustain and/or protect human life. If they fail, it is reasonable to assume that the health of the user or other persons may be endangered.

XC164N-32F/32R

16-Bit Single-Chip Microcontroller with C166SV2 Core

Microcontrollers

Never stop thinking

XC164N
Revision History:

Previous Version(s):

Page	Subjects (major changes since last revision)

We Listen to Your Comments

Any information within this document that you feel is wrong, unclear or missing at all? Your feedback will help us to continuously improve the quality of this document. Please send your proposal (including a reference to this document) to:

mcdocu.comments@infineon.com

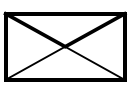

Table of Contents

1 Summary of Features 4

2 General Device Information 7
2.1 Introduction 7
2.2 Pin Configuration and Definition 8

3 Functional Description 17
3.1 Memory Subsystem and Organization 18
3.2 External Bus Controller 20
3.3 Central Processing Unit (CPU) 21
3.4 Interrupt System 23
3.5 On-Chip Debug Support (OCDS) 28
3.6 Capture/Compare Units (CAPCOM1/2) 28
3.7 The Capture/Compare Unit CAPCOM6 31
3.8 General Purpose Timer (GPT12E) Unit 32
3.9 Real Time Clock 36
3.10 Asynchronous/Synchronous Serial Interfaces (ASC0/ASC1) 38
3.11 High Speed Synchronous Serial Channels (SSC0/SSC1) 39
3.12 Watchdog Timer 40
3.13 Clock Generation 41
3.14 Parallel Ports 41
3.15 Power Management 43
3.16 Instruction Set Summary 44

4 Electrical Parameters 47
4.1 General Parameters 47
4.2 DC Parameters 50
4.3 AC Parameters 55
4.3.1 Definition of Internal Timing 55
4.3.2 On-chip Flash Operation 59
4.3.3 External Clock Drive XTAL1 60
4.3.4 Testing Waveforms 61
4.3.5 External Bus Timing 62

5 Package and Reliability 67
5.1 Packaging 67
5.2 Flash Memory Parameters 69

1 Summary of Features

- High Performance 16-bit CPU with 5-Stage Pipeline
  - 25 ns Instruction Cycle Time at 40 MHz CPU Clock (Single-Cycle Execution)
  - 1-Cycle Multiplication (16 × 16 bit), Background Division (32 / 16 bit) in 21 Cycles
  - 1-Cycle Multiply-and-Accumulate (MAC) Instructions
  - Enhanced Boolean Bit Manipulation Facilities
  - Zero-Cycle Jump Execution
  - Additional Instructions to Support HLL and Operating Systems
  - Register-Based Design with Multiple Variable Register Banks
  - Fast Context Switching Support with Two Additional Local Register Banks
  - 16 Mbytes Total Linear Address Space for Code and Data
  - 1024 Bytes On-Chip Special Function Register Area (C166 Family Compatible)
- 16-Priority-Level Interrupt System with up to 75 Sources, Sample-Rate down to 50 ns
- 8-Channel Interrupt-Driven Single-Cycle Data Transfer Facilities via Peripheral Event Controller (PEC), 24-Bit Pointers Cover Total Address Space
- Clock Generation via on-chip PLL (factors 1:0.15 … 1:10), or via Prescaler (factors 1:1 … 60:1)
- On-Chip Memory Modules
  - 2 Kbytes On-Chip Dual-Port RAM (DPRAM)
  - 4 Kbytes On-Chip Data SRAM (DSRAM)[1)]
  - 6 Kbytes On-Chip Program/Data SRAM (PSRAM)
  - 256 Kbytes On-Chip Program Memory (Flash Memory or Mask ROM)[1)]
- On-Chip Peripheral Modules
  - Two 16-Channel General Purpose Capture/Compare Units (12 Input/Output Pins)
  - Capture/Compare Unit for flexible PWM Signal Generation (CAPCOM6) (3/6 Capture/Compare Channels and 1 Compare Channel)
  - Multi-Functional General Purpose Timer Unit with 5 Timers
  - Two Synchronous/Asynchronous Serial Channels (USARTs)
  - Two High-Speed-Synchronous Serial Channels
  - On-Chip Real Time Clock
- Idle, Sleep, and Power Down Modes with Flexible Power Management
- Programmable Watchdog Timer and Oscillator Watchdog
- Up to 12 Mbytes External Address Space for Code and Data
  - Programmable External Bus Characteristics for Different Address Ranges
  - Multiplexed or Demultiplexed External Address/Data Buses

1) Depends on the respective derivative. The derivatives are listed in **Table 1**.

  - Selectable Address Bus Width
  - 16-Bit or 8-Bit Data Bus Width
  - Four Programmable Chip-Select Signals
- Up to 79 General Purpose I/O Lines,
  partly with Selectable Input Thresholds and Hysteresis
- On-Chip Bootstrap Loader
- Supported by a Large Range of Development Tools like C-Compilers,
  Macro-Assembler Packages, Emulators, Evaluation Boards, HLL-Debuggers,
  Simulators, Logic Analyzer Disassemblers, Programming Boards
- On-Chip Debug Support via JTAG Interface
- 100-Pin Green TQFP Package, 0.5 mm (19.7 mil) pitch (RoHS compliant)

Ordering Information

The ordering code for Infineon microcontrollers provides an exact reference to the required product. This ordering code identifies:

- the derivative itself, i.e. its function set, the temperature range, and the supply voltage
- the package and the type of delivery.

For the available ordering codes for the XC164N please refer to your responsible sales representative or your local distributor.

Note: The ordering codes for Mask-ROM versions are defined for each product after verification of the respective ROM code.

This document describes several derivatives of the XC164N group. **Table 1** enumerates these derivatives and summarizes the differences. As this document refers to all of these derivatives, some descriptions may not apply to a specific product.

For simplicity all versions are referred to by the term **XC164N** throughout this document.

Table 1 XC164N Derivative Synopsis

Derivative[1)]	Temp. Range	Program Memory	On-Chip RAM	Interfaces
Standard Devices[2)]				
SAF-XC164N-32F40F SAF-XC164N-32F20F	-40 °C to 85 °C	256 Kbytes Flash	2 Kbytes DPRAM, 4 Kbytes DSRAM, 6 Kbytes PSRAM	ASC0, ASC1, SSC0, SSC1, CC6
ROM Devices				
SAF-XC164N-32R40F SAF-XC164N-32R20F	-40 °C to 85 °C	256 Kbytes ROM	2 Kbytes DPRAM, 4 Kbytes DSRAM, 6 Kbytes PSRAM	ASC0, ASC1, SSC0, SSC1, CC6

1) This Data Sheet is valid for devices starting with and including design step BB.

2) The Flash speed grading indicates the access time to the on-chip Flash module. According to this access time Flash waitstates must be selected (bitfield WSFLASH in register IMBCTRL) according to the intended operating frequency. For more details, please refer to **Section 4.3.2**.

2 General Device Information

2.1 Introduction

The XC164N derivatives are high-performance members of the Infineon XC166 Family of full featured single-chip CMOS microcontrollers. These devices extend the functionality and performance of the C166 Family in terms of instructions (MAC unit), peripherals, and speed. They combine high CPU performance (up to 40 million instructions per second) with high peripheral functionality and enhanced IO-capabilities. They also provide clock generation via PLL and various on-chip memory modules such as program Flash, program RAM, and data RAM.

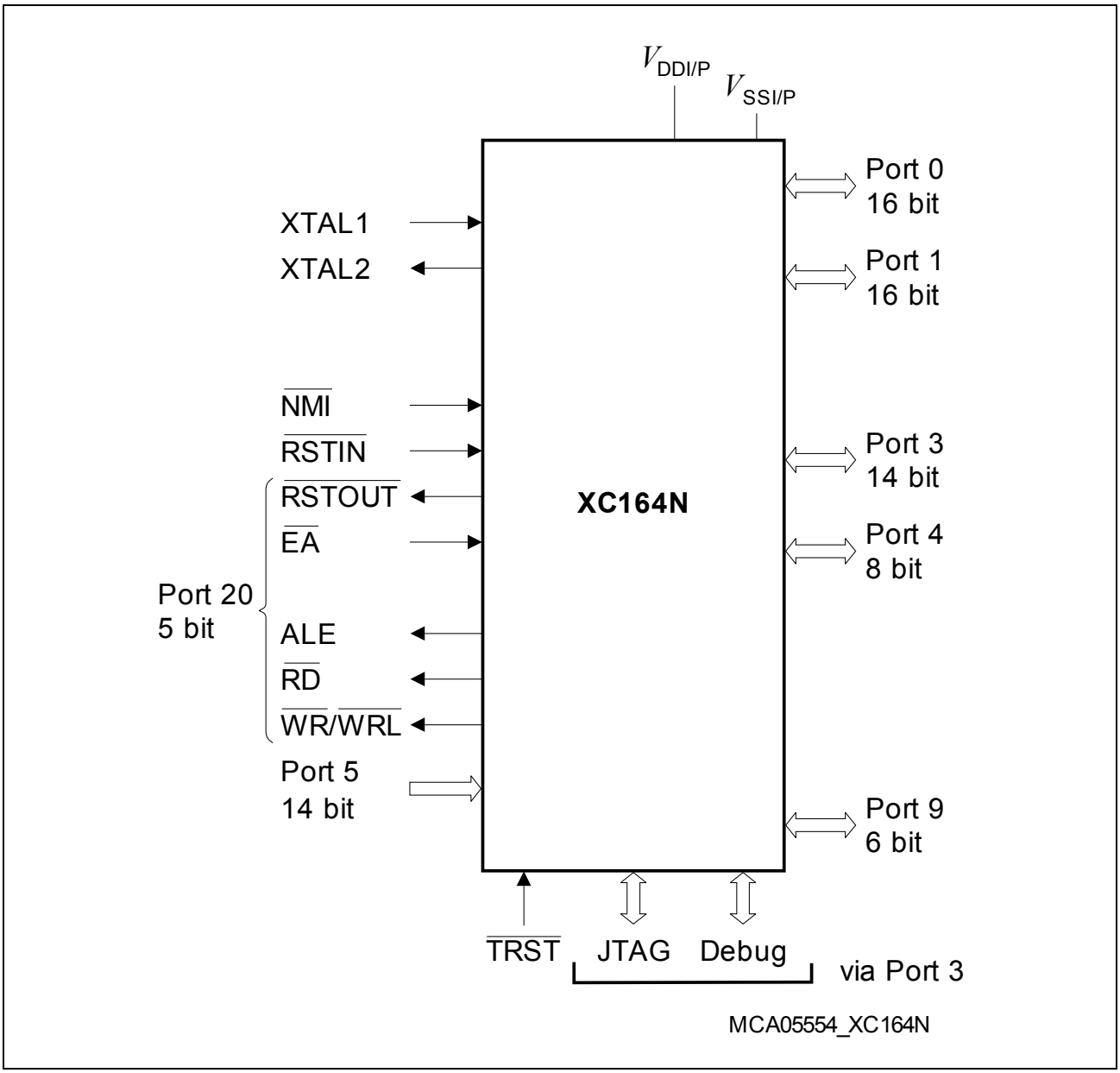

Figure 1 Logic Symbol

2.2 Pin Configuration and Definition

The pins of the XC164N are described in detail in **Table 1**, including all their alternate functions. **Figure 2** summarizes all pins in a condensed way, showing their location on the package. E*) mark pins to be used as alternate external interrupt inputs.

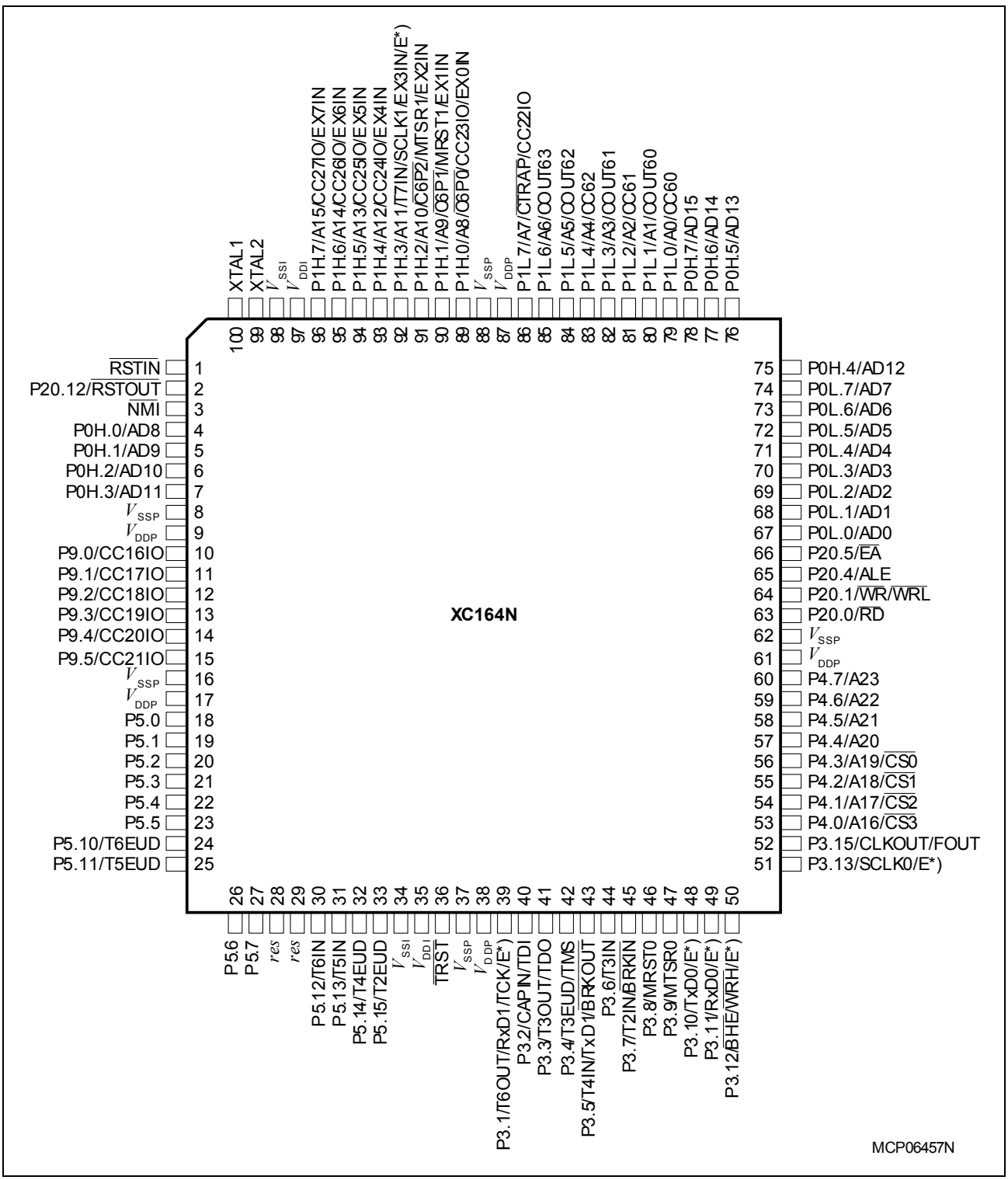

Figure 2 Pin Configuration (top view)

Table 2 Pin Definitions and Functions

Symbol	Pin Num.	Input Outp.	Function
$\overline{\text{RSTIN}}$	1	I	Reset Input with Schmitt-Trigger characteristics. A low level at this pin while the oscillator is running resets the XC164N. A spike filter suppresses input pulses < 10 ns. Input pulses > 100 ns safely pass the filter. The minimum duration for a safe recognition should be 100 ns + 2 CPU clock cycles. *Note: The reset duration must be sufficient to let the hardware configuration signals settle. External circuitry must guarantee low level at the $\overline{\text{RSTIN}}$ pin at least until both power supply voltages have reached the operating range.*
P20.12	2	IO	For details, please refer to the description of **P20**.
$\overline{\text{NMI}}$	3	I	Non-Maskable Interrupt Input. A high to low transition at this pin causes the CPU to vector to the NMI trap routine. When the PWRDN (power down) instruction is executed, the $\overline{\text{NMI}}$ pin must be low in order to force the XC164N into power down mode. If $\overline{\text{NMI}}$ is high, when PWRDN is executed, the part will continue to run in normal mode. If not used, pin $\overline{\text{NMI}}$ should be pulled high externally.
P0H.0-P0H.3	4…7	IO	For details, please refer to the description of **PORT0**.
P9		IO	Port 9 is a 6-bit bidirectional I/O port. Each pin can be programmed for input (output driver in high-impedance state) or output (configurable as push/pull or open drain driver). The input threshold of Port 9 is selectable (standard or special). The following Port 9 pins also serve for alternate functions:
P9.0	10	I/O I	CC16IO CAPCOM2: CC16 Capture Inp./Compare Outp., EX7IN Fast External Interrupt 7 Input (alternate pin B)
P9.1	11	I/O I	CC17IO CAPCOM2: CC17 Capture Inp./Compare Outp., EX6IN Fast External Interrupt 6 Input (alternate pin B)
P9.2	12	I/O I	CC18IO CAPCOM2: CC18 Capture Inp./Compare Outp., EX7IN Fast External Interrupt 7 Input (alternate pin A)
P9.3	13	I/O I	CC19IO CAPCOM2: CC19 Capture Inp./Compare Outp., EX6IN Fast External Interrupt 6 Input (alternate pin A)
P9.4	14	I/O	CC20IO CAPCOM2: CC20 Capture Inp./Compare Outp.
P9.5	15	I/O	CC21IO CAPCOM2: CC21 Capture Inp./Compare Outp.

Table 2 Pin Definitions and Functions (cont'd)

Symbol	Pin Num.	Input Outp.	Function
P5		I	Port 5 is a 14-bit input-only port. Some pins of Port 5 serve as timer inputs:
P5.0	18	I	No Alternate Function beside General Purpose Input
P5.1	19	I	No Alternate Function beside General Purpose Input
P5.2	20	I	No Alternate Function beside General Purpose Input
P5.3	21	I	No Alternate Function beside General Purpose Input
P5.4	22	I	No Alternate Function beside General Purpose Input
P5.5	23	I	No Alternate Function beside General Purpose Input
P5.10	24	I	T6EUD GPT2 Timer T6 Ext. Up/Down Ctrl. Inp.
P5.11	25	I	T5EUD GPT2 Timer T5 Ext. Up/Down Ctrl. Inp.
P5.6	26	I	No Alternate Function beside General Purpose Input
P5.7	27	I	No Alternate Function beside General Purpose Input
P5.12	30	I	T6IN GPT2 Timer T6 Count/Gate Input
P5.13	31	I	T5IN GPT2 Timer T5 Count/Gate Input
P5.14	32	I	T4EUD GPT1 Timer T4 Ext. Up/Down Ctrl. Inp.
P5.15	33	I	T2EUD GPT1 Timer T2 Ext. Up/Down Ctrl. Inp.
$\overline{\text{TRST}}$	36	I	Test-System Reset Input. For normal system operation, pin $\overline{\text{TRST}}$ should be held low. A high level at this pin at the rising edge of $\overline{\text{RSTIN}}$ activates the XC164CM's debug system. In this case, pin $\overline{\text{TRST}}$ must be driven low once to reset the debug system.

Table 2 Pin Definitions and Functions (cont'd)

Symbol	Pin Num.	Input Outp.	Function	
P3		IO	Port 3 is a 14-bit bidirectional I/O port. Each pin can be programmed for input (output driver in high-impedance state) or output (configurable as push/pull or open drain driver). The input threshold of Port 3 is selectable (standard or special). The following Port 3 pins also serve for alternate functions:	
P3.1	39	O	T6OUT	GPT2 Timer T6 Toggle Latch Output,
		I/O	RxD1	ASC1 Data Input (Async.) or Inp./Outp. (Sync.),
		I	EX1IN	Fast External Interrupt 1 Input (alternate pin A),
		I	TCK	Debug System: JTAG Clock Input
P3.2	40	I	CAPIN	GPT2 Register CAPREL Capture Input,
		I	TDI	Debug System: JTAG Data In
P3.3	41	O	T3OUT	GPT1 Timer T3 Toggle Latch Output,
		O	TDO	Debug System: JTAG Data Out
P3.4	42	I	T3EUD	GPT1 Timer T3 External Up/Down Control Input,
		I		
P3.5	43	I	TMS	Debug System: JTAG Test Mode Selection
		O	T4IN	GPT1 Timer T4 Count/Gate/Reload/Capture Inp
		O	TxD1	ASC0 Clock/Data Output (Async./Sync.),
P3.6	44	I	BRKOUT	Debug System: Break Out
P3.7	45	I	T3IN	GPT1 Timer T3 Count/Gate Input
		I	T2IN	GPT1 Timer T2 Count/Gate/Reload/Capture Inp
P3.8	46	I/O	BRKIN	Debug System: Break In
P3.9	47	I/O	MRST0	SSC0 Master-Receive/Slave-Transmit In/Out.
P3.10	48	O	MTSR0	SSC0 Master-Transmit/Slave-Receive Out/In.
		I	TxD0	ASC0 Clock/Data Output (Async./Sync.),
P3.11	49	I/O	EX2IN	Fast External Interrupt 2 Input (alternate pin B)
		I	RxD0	ASC0 Data Input (Async.) or Inp./Outp. (Sync.),
P3.12	50	O	EX2IN	Fast External Interrupt 2 Input (alternate pin A)
		O	BHE	External Memory High Byte Enable Signal,
		I	WRH	External Memory High Byte Write Strobe,
P3.13	51	I/O	EX3IN	Fast External Interrupt 3 Input (alternate pin B)
		I	SCLK0	SSC0 Master Clock Output / Slave Clock Input.,
P3.15	52	O	EX3IN	Fast External Interrupt 3 Input (alternate pin A)
		O	CLKOUT	System Clock Output (= CPU Clock),
			FOUT	Programmable Frequency Output

Table 2 Pin Definitions and Functions (cont'd)

Symbol	Pin Num.	Input Outp.	Function	
P4		IO	Port 4 is an 8-bit bidirectional I/O port. Each pin can be programmed for input (output driver in high-impedance state) or output (configurable as push/pull or open drain driver). The input threshold of Port 4 is selectable (standard or special). Port 4 can be used to output the segment address lines, the optional chip select lines, and for serial interface lines:	
P4.0	53	O	$\overline{A16}$	Least Significant Segment Address Line,
		O	$\overline{CS3}$	Chip Select 3 Output
P4.1	54	O	$\overline{A17}$	Segment Address Line,
		O	$\overline{CS2}$	Chip Select 2 Output
P4.2	55	O	$\overline{A18}$	Segment Address Line,
		O	$\overline{CS1}$	Chip Select 1 Output
P4.3	56	O	$\overline{A19}$	Segment Address Line,
		O	$\overline{CS0}$	Chip Select 0 Output
P4.4	57	O	A20	Segment Address Line,
		I	EX5IN	Fast External Interrupt 5 Input (alternate pin B)
P4.5	58	O	A21	Segment Address Line,
		I	EX4IN	Fast External Interrupt 4 Input (alternate pin B)
P4.6	59	O	A22	Segment Address Line,
		I	EX5IN	Fast External Interrupt 5 Input (alternate pin A)
P4.7	60	O	A23	Most Significant Segment Address Line,
		I	EX4IN	Fast External Interrupt 4 Input (alternate pin A)

Table 2 Pin Definitions and Functions (cont'd)

Symbol	Pin Num.	Input Outp.	Function	
P20		IO	Port 20 is a 5-bit bidirectional I/O port. Each pin can be programmed for input (output driver in high-impedance state) or output. The input threshold of Port 20 is selectable (standard or special). The following Port 20 pins also serve for alternate functions:	
P20.0	63	O	$\overline{RD}$	External Memory Read Strobe, activated for every external instruction or data read access.
P20.1	64	O	$\overline{WR}$/$\overline{WRL}$	External Memory Write Strobe. In $\overline{WR}$-mode this pin is activated for every external data write access. In $\overline{WRL}$-mode this pin is activated for low byte data write accesses on a 16-bit bus, and for every data write access on an 8-bit bus.
P20.4	65	O	ALE	Address Latch Enable Output. Can be used for latching the address into external memory or an address latch in the multiplexed bus modes.
P20.5	66	I	$\overline{EA}$	External Access Enable pin. **A low level** at this pin during and after Reset forces the XC164N to latch the configuration from PORT0 and pin $\overline{RD}$, and to begin instruction execution out of external memory. **A high level** forces the XC164N to latch the configuration from pins $\overline{RD}$, ALE, and $\overline{WR}$, and to begin instruction execution out of the internal program memory. "ROMless" versions must have this pin tied to '0'.
P20.12	2	O	$\overline{RSTOUT}$	Internal Reset Indication Output. **Is activated** asynchronously with an external hardware reset. It may also be activated (selectable) synchronously with an internal software or watchdog reset. **Is deactivated** upon the execution of the EINIT instruction, optionally at the end of reset, or at any time (before EINIT) via user software.
			Note: Port 20 pins may input configuration values (see $\overline{EA}$).	

Table 2 Pin Definitions and Functions (cont'd)

Symbol	Pin Num.	Input Outp.	Function
PORT0		IO	PORT0 consists of the two 8-bit bidirectional I/O ports P0L and P0H. Each pin can be programmed for input (output driver in high-impedance state) or output.
P0L.0 - P0L.7	67 - 74		In case of an external bus configuration, PORT0 serves as the address (A) and address/data (AD) bus in multiplexed bus modes and as the data (D) bus in demultiplexed bus modes.
P0H.0 - P0L.3	4 - 7		**Demultiplexed bus modes:**
P0H.4 - P0L.7	75 - 78		8-bit data bus: P0H = I/O, P0L = D7 - D0 16-bit data bus: P0H = D15 - D8, P0L = D7 - D0 **Multiplexed bus modes:** 8-bit data bus: P0H = A15 - A8, P0L = AD7 - AD0 16-bit data bus: P0H = AD15 - AD8, P0L = AD7 - AD0 *Note: At the end of an external reset ($\overline{EA}$ = 0) PORT0 also may input configuration values*
PORT1		IO	PORT1 consists of the two 8-bit bidirectional I/O ports P1L and P1H. Each pin can be programmed for input (output driver in high-impedance state) or output. PORT1 is used as the 16-bit address bus (A) in demultiplexed bus modes (also after switching from a demultiplexed to a multiplexed bus mode). The following PORT1 pins also serve for alt. functions:
P1L.0	79	I/O	CC60 CAPCOM6: Input / Output of Channel 0
P1L.1	80	O	COUT60 CAPCOM6: Output of Channel 0
P1L.2	81	I/O	CC61 CAPCOM6: Input / Output of Channel 1
P1L.3	82	O	COUT61 CAPCOM6: Output of Channel 1
P1L.4	83	I/O	CC62 CAPCOM6: Input / Output of Channel 2
P1L.5	84	O	COUT62 CAPCOM6: Output of Channel 2
P1L.6	85	O	$\overline{COUT63}$ Output of 10-bit Compare Channel
P1L.7	86	I	$\overline{CTRAP}$ CAPCOM6: Trap Input $\overline{CTRAP}$ is an input pin with an internal pull-up resistor. A low level on this pin switches the CAPCOM6 compare outputs to the logic level defined by software (if enabled).
		I/O	CC22IO CAPCOM2: CC22 Capture Inp./Compare Outp.
P1H	…		…continued…

Table 2 Pin Definitions and Functions (cont'd)

Symbol	Pin Num.	Input Outp.	Function
PORT1 (cont'd)		IO	…continued…
P1H.0	89	I	$\overline{\text{CC6POS0}}$ CAPCOM6: Position 0 Input,
		I	EX0IN Fast External Interrupt 0 Input (default pin),
		I/O	$\overline{\text{CC23IO}}$ CAPCOM2: CC23 Capture Inp./Compare Outp.
P1H.1	90	I	$\overline{\text{CC6POS1}}$ CAPCOM6: Position 1 Input,
		I	EX1IN Fast External Interrupt 1 Input (default pin),
		I/O	$\overline{\text{MRST1}}$ SSC1 Master-Receive/Slave-Transmit In/Out.
P1H.2	91	I	$\overline{\text{CC6POS2}}$ CAPCOM6: Position 2 Input,
		I	EX2IN Fast External Interrupt 2 Input (default pin),
		I/O	MTSR1 SSC1 Master-Transmit/Slave-Receive Out/Inp.
P1H.3	92	I	T7IN CAPCOM2: Timer T7 Count Input,
		I/O	SCLK1 SSC1 Master Clock Output / Slave Clock Input,
		I	EX3IN Fast External Interrupt 3 Input (default pin),
		I	EX0IN Fast External Interrupt 0 Input (alternate pin A)
P1H.4	93	I/O	CC24IO CAPCOM2: CC24 Capture Inp./Compare Outp.,
		I	EX4IN Fast External Interrupt 4 Input (default pin)
P1H.5	94	I/O	CC25IO CAPCOM2: CC25 Capture Inp./Compare Outp.,
		I	EX5IN Fast External Interrupt 5 Input (default pin)
P1H.6	95	I/O	CC26IO CAPCOM2: CC26 Capture Inp./Compare Outp.,
		I	EX6IN Fast External Interrupt 6 Input (default pin)
P1H.7	96	I/O	CC27IO CAPCOM2: CC27 Capture Inp./Compare Outp.,
		I	EX7IN Fast External Interrupt 7 Input (default pin)
$\overline{\text{XTAL2}}$	99	O	XTAL2: Output of the oscillator amplifier circuit
XTAL1	100	I	XTAL1: Input to the oscillator amplifier and input to the internal clock generator To clock the device from an external source, drive XTAL1, while leaving XTAL2 unconnected. Minimum and maximum high/low and rise/fall times specified in the AC Characteristics must be observed. *Note: Input pin XTAL1 belongs to the core voltage domain. Therefore, input voltages must be within the range defined for V_{DDI}.*
res	28	–	Pin is reserved and should be connected to V_{DDP} or V_{SSP}
res	29	–	Pin is reserved and should be connected to V_{SSP}

Table 2 Pin Definitions and Functions (cont'd)

Symbol	Pin Num.	Input Outp.	Function
V_{DDI}	35, 97	–	Digital Core Supply Voltage (On-Chip Modules): +2.5 V during normal operation and idle mode. Please refer to the **Operating Conditions**
V_{DDP}	9, 17, 38, 61, 87	–	Digital Pad Supply Voltage (Pin Output Drivers): +5 V during normal operation and idle mode. Please refer to the **Operating Conditions**
V_{SSI}	34, 98	–	**Digital Ground.** Connect decoupling capacitors to adjacent V_{DD}/V_{SS} pin pairs as close as possible to the pins. All V_{SS} pins must be connected to the ground-line or ground-plane.
V_{SSP}	8, 16, 37, 62, 88	–	

3 Functional Description

The architecture of the XC164N combines advantages of RISC, CISC, and DSP processors with an advanced peripheral subsystem in a very well-balanced way. In addition, the on-chip memory blocks allow the design of compact systems-on-silicon with maximum performance (computing, control, communication).

The on-chip memory blocks (program code-memory and SRAM, dual-port RAM, data SRAM) and the set of generic peripherals are connected to the CPU via separate buses. Another bus, the LXBus, connects additional on-chip resources as well as external resources (see **Figure 3**).

This bus structure enhances the overall system performance by enabling the concurrent operation of several subsystems of the XC164N.

The following block diagram gives an overview of the different on-chip components and of the advanced, high bandwidth internal bus structure of the XC164N.

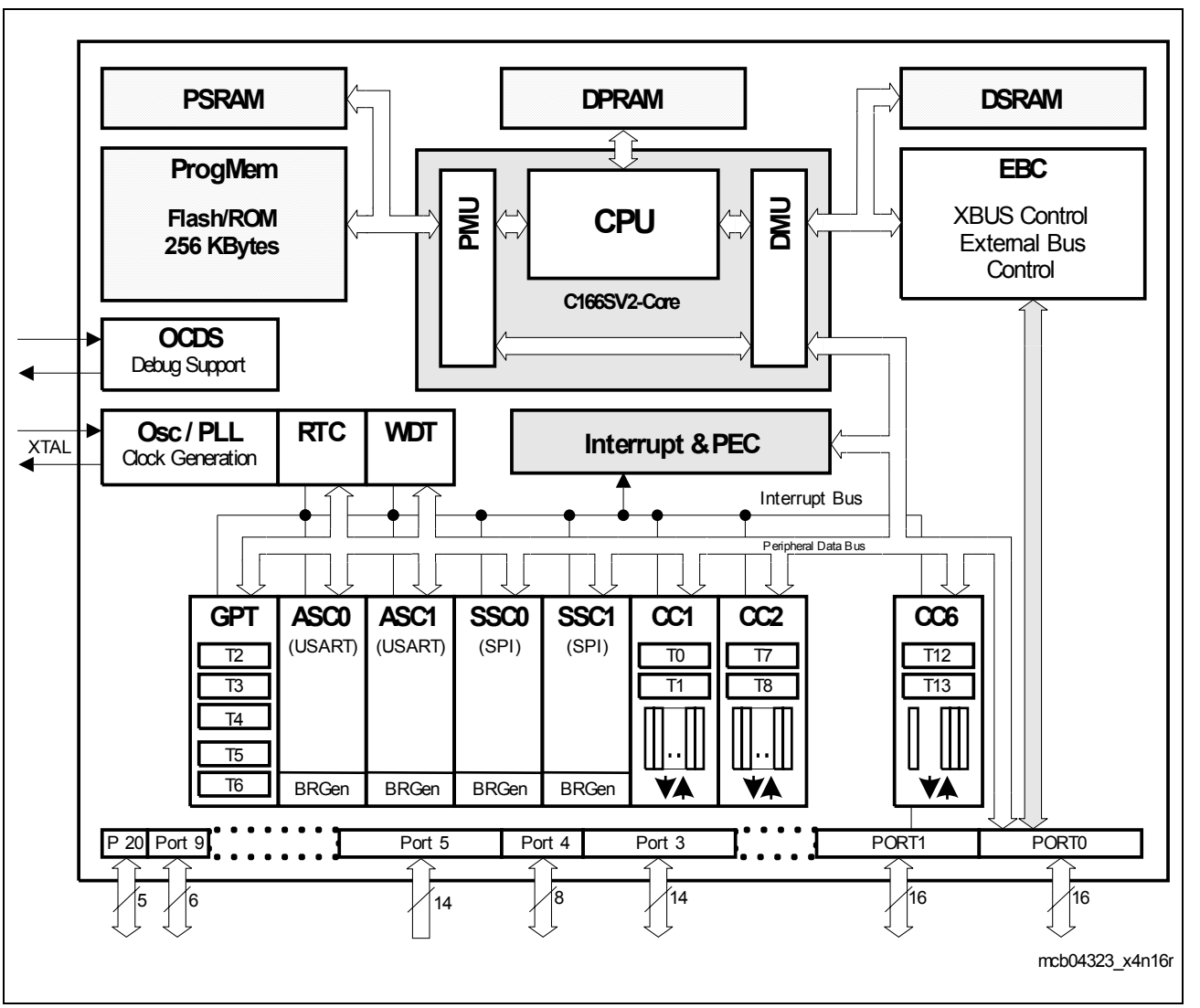

Figure 3 Block Diagram

3.1 Memory Subsystem and Organization

The memory space of the XC164N is configured in a Von Neumann architecture, which means that all internal and external resources, such as code memory, data memory, registers and I/O ports, are organized within the same linear address space. This common memory space includes 16 Mbytes and is arranged as 256 segments of 64 Kbytes each, where each segment consists of four data pages of 16 Kbytes each. The entire memory space can be accessed bytewise or wordwise. Portions of the on-chip DPRAM and the register spaces (E/SFR) have additionally been made directly bitaddressable.

The internal data memory areas and the Special Function Register areas (SFR and ESFR) are mapped into segment 0, the system segment.

The Program Management Unit (PMU) handles all code fetches and, therefore, controls accesses to the program memories, such as Flash memory, and PSRAM.

The Data Management Unit (DMU) handles all data transfers and, therefore, controls accesses to the DSRAM and the on-chip peripherals.

Both units (PMU and DMU) are connected via the high-speed system bus to exchange data. This is required if operands are read from program memory, code or data is written to the PSRAM, code is fetched from external memory, or data is read from or written to external resources, including peripherals on the LXBus. The system bus allows concurrent two-way communication for maximum transfer performance.

256 Kbytes[1] **of on-chip Flash memory or mask-programmable ROM** store code or constant data. The on-chip Flash memory is organized as four 8-Kbyte sectors, one 32-Kbyte sector, and three 64-Kbyte sector. Each sector can be separately write protected[2], erased and programmed (in blocks of 128 Bytes). The complete Flash or ROM area can be read-protected. A password sequence temporarily unlocks protected areas. The Flash module combines very fast 64-bit one-cycle read accesses with protected and efficient writing algorithms for programming and erasing. Thus, program execution out of the internal Flash results in maximum performance. Dynamic error correction provides extremely high read data security for all read accesses.
For timing characteristics, please refer to **Section 4.3.2**.

6 Kbytes of on-chip Program SRAM (PSRAM) are provided to store user code or data. The PSRAM is accessed via the PMU and is therefore optimized for code fetches.

4 Kbytes[1] **of on-chip Data SRAM (DSRAM)** are provided as a storage for general user data. The DSRAM is accessed via the DMU and is therefore optimized for data accesses.

2 Kbytes of on-chip Dual-Port RAM (DPRAM) are provided as a storage for user defined variables, for the system stack, and general purpose register banks. A register

1) Depends on the respective derivative. The derivatives are listed in **Table 1**.

2) Each two 8-Kbyte sectors are combined for write-protection purposes.

bank can consist of up to 16 wordwide (R0 to R15) and/or bytewide (RL0, RH0, …, RL7, RH7) so-called General Purpose Registers (GPRs).
The upper 256 bytes of the DPRAM are directly bitaddressable. When used by a GPR, any location in the DPRAM is bitaddressable.

1024 bytes (2 × 512 bytes) of the address space are reserved for the Special Function Register areas (SFR space and ESFR space). SFRs are wordwide registers which are used for controlling and monitoring functions of the different on-chip units. Unused SFR addresses are reserved for future members of the XC166 Family. Therefore, they should either not be accessed, or written with zeros, to ensure upward compatibility.

In order to meet the needs of designs where more memory is required than is provided on chip, up to 12 Mbytes (approximately, see **Table 3**) of external RAM and/or ROM can be connected to the microcontroller.

Table 3 XC164N Memory Map[1)]

Address Area	Start Loc.	End Loc.	Area Size[2)]	Notes
Flash register space	$FF'F000_H$	$FF'FFFF_H$	4 Kbytes	Flash only[3)]
Reserved (Acc. trap)	$F8'0000_H$	$FF'EFFF_H$	< 0.5 Mbytes	Minus Flash register space
Reserved for PSRAM	$E0'1800_H$	$F7'FFFF_H$	< 1.5 Mbytes	Minus PSRAM
Program SRAM	$E0'0000_H$	$E0'17FF_H$	6 Kbytes	Maximum
Reserved for program memory	$C4'0000_H$	$DF'FFFF_H$	< 2 Mbytes	Minus Flash
Program Flash/ROM	$C0'0000_H$	$C3'FFFF_H$	256 Kbytes	[4)]
Reserved	$BF'0000_H$	$BF'FFFF_H$	64 Kbytes	–
External memory area	$40'0000_H$	$BE'FFFF_H$	< 8 Mbytes	Minus reserved segment
External IO area[5)]	$20'0800_H$	$3F'FFFF_H$	< 2 Mbytes	Minus 2 Kbytes
Reserved	$20'0000_H$	$20'07FF_H$	2 Kbytes	–
External memory area	$01'0000_H$	$1F'FFFF_H$	< 2 Mbytes	Minus segment 0
Data RAMs and SFRs	$00'8000_H$	$00'FFFF_H$	32 Kbytes	Partly used[4)]
External memory area	$00'0000_H$	$00'7FFF_H$	32 Kbytes	–

1) Accesses to the shaded areas generate external bus accesses.
2) The areas marked with “<” are slightly smaller than indicated, see column “Notes”.
3) Not defined register locations return a trap code.
4) Depends on the respective derivative. The derivatives are listed in **Table 1**.
5) Several pipeline optimizations are not active within the external IO area. This is necessary to control external peripherals properly.

3.2 External Bus Controller

All of the external memory accesses are performed by a particular on-chip External Bus Controller (EBC). It can be programmed either to Single Chip Mode when no external memory is required, or to one of four different external memory access modes[1)], which are as follows:

- 16 … 24-bit Addresses, 16-bit Data, Demultiplexed
- 16 … 24-bit Addresses, 16-bit Data, Multiplexed
- 16 … 24-bit Addresses, 8-bit Data, Multiplexed
- 16 … 24-bit Addresses, 8-bit Data, Demultiplexed

In the demultiplexed bus modes, addresses are output on PORT1 and data is input/output on PORT0 or P0L, respectively. In the multiplexed bus modes both addresses and data use PORT0 for input/output. The high order address (segment) lines use Port 4. The number of active segment address lines is selectable, restricting the external address space to 8 Mbytes … 64 Kbytes. This is required when interface lines are assigned to Port 4.

Up to 4 external $\overline{CS}$ signals (3 windows plus default) can be generated in order to save external glue logic. External modules can directly be connected to the common address/data bus and their individual select lines.

Important timing characteristics of the external bus interface have been made programmable (via registers TCONCSx/FCONCSx) to allow the user the adaption of a wide range of different types of memories and external peripherals.

In addition, up to 4 independent address windows may be defined (via registers ADDRSELx) which control the access to different resources with different bus characteristics. These address windows are arranged hierarchically where window 4 overrides window 3, and window 2 overrides window 1. All accesses to locations not covered by these 4 address windows are controlled by TCONCS0/FCONCS0. The currently active window can generate a chip select signal.

Note: The chip select signal of address window 4 is not available on a pin.

The external bus timing is related to the rising edge of the reference clock output CLKOUT. The external bus protocol is compatible with that of the standard C166 Family.

The EBC also controls accesses to resources connected to the on-chip LXBus. The LXBus is an internal representation of the external bus and allows accessing integrated peripherals and modules in the same way as external components.

1) Bus modes are switched dynamically if several address windows with different mode settings are used.

3.3 Central Processing Unit (CPU)

The main core of the CPU consists of a 5-stage execution pipeline with a 2-stage instruction-fetch pipeline, a 16-bit arithmetic and logic unit (ALU), a 32-bit/40-bit multiply and accumulate unit (MAC), a register-file providing three register banks, and dedicated SFRs. The ALU features a multiply and divide unit, a bit-mask generator, and a barrel shifter.

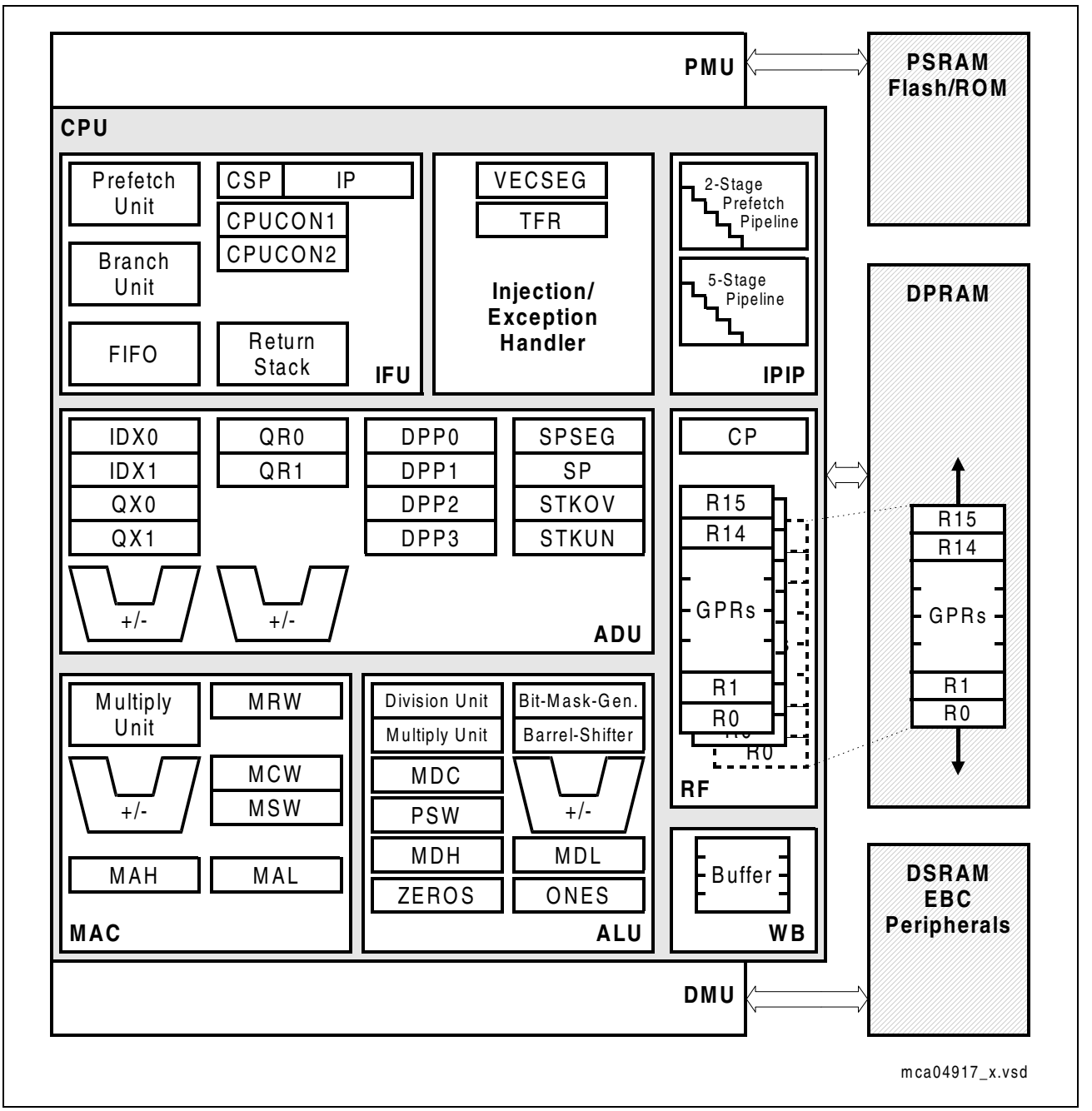

Figure 4 CPU Block Diagram

Based on these hardware provisions, most of the XC164N's instructions can be executed in just one machine cycle which requires 25 ns at 40 MHz CPU clock. For

example, shift and rotate instructions are always processed during one machine cycle independent of the number of bits to be shifted. Also multiplication and most MAC instructions execute in one single cycle. All multiple-cycle instructions have been optimized so that they can be executed very fast as well: for example, a division algorithm is performed in 18 to 21 CPU cycles, depending on the data and division type. Four cycles are always visible, the rest runs in the background. Another pipeline optimization, the branch target prediction, allows eliminating the execution time of branch instructions if the prediction was correct.

The CPU has a register context consisting of up to three register banks with 16 wordwide GPRs each at its disposal. The global register bank is physically allocated within the on-chip DPRAM area. A Context Pointer (CP) register determines the base address of the active global register bank to be accessed by the CPU at any time. The number of register banks is only restricted by the available internal RAM space. For easy parameter passing, a register bank may overlap others.

A system stack of up to 32 Kwords is provided as a storage for temporary data. The system stack can be allocated to any location within the address space (preferably in the on-chip RAM area), and it is accessed by the CPU via the stack pointer (SP) register. Two separate SFRs, STKOV and STKUN, are implicitly compared against the stack pointer value upon each stack access for the detection of a stack overflow or underflow.

The high performance offered by the hardware implementation of the CPU can efficiently be utilized by a programmer via the highly efficient XC164N instruction set which includes the following instruction classes:

- Standard Arithmetic Instructions
- DSP-Oriented Arithmetic Instructions
- Logical Instructions
- Boolean Bit Manipulation Instructions
- Compare and Loop Control Instructions
- Shift and Rotate Instructions
- Prioritize Instruction
- Data Movement Instructions
- System Stack Instructions
- Jump and Call Instructions
- Return Instructions
- System Control Instructions
- Miscellaneous Instructions

The basic instruction length is either 2 or 4 bytes. Possible operand types are bits, bytes and words. A variety of direct, indirect or immediate addressing modes are provided to specify the required operands.

3.4 Interrupt System

With an interrupt response time of typically 8 CPU clocks (in case of internal program execution), the XC164N is capable of reacting very fast to the occurrence of non-deterministic events.

The architecture of the XC164N supports several mechanisms for fast and flexible response to service requests that can be generated from various sources internal or external to the microcontroller. Any of these interrupt requests can be programmed to being serviced by the Interrupt Controller or by the Peripheral Event Controller (PEC).

In contrast to a standard interrupt service where the current program execution is suspended and a branch to the interrupt vector table is performed, just one cycle is ‘stolen’ from the current CPU activity to perform a PEC service. A PEC service implies a single byte or word data transfer between any two memory locations with an additional increment of either the PEC source, or the destination pointer, or both. An individual PEC transfer counter is implicitly decremented for each PEC service except when performing in the continuous transfer mode. When this counter reaches zero, a standard interrupt is performed to the corresponding source related vector location. PEC services are very well suited, for example, for supporting the transmission or reception of blocks of data. The XC164N has 8 PEC channels each of which offers such fast interrupt-driven data transfer capabilities.

A separate control register which contains an interrupt request flag, an interrupt enable flag and an interrupt priority bitfield exists for each of the possible interrupt nodes. Via its related register, each node can be programmed to one of sixteen interrupt priority levels. Once having been accepted by the CPU, an interrupt service can only be interrupted by a higher prioritized service request. For the standard interrupt processing, each of the possible interrupt nodes has a dedicated vector location.

Fast external interrupt inputs are provided to service external interrupts with high precision requirements. These fast interrupt inputs feature programmable edge detection (rising edge, falling edge, or both edges).

Software interrupts are supported by means of the ‘TRAP’ instruction in combination with an individual trap (interrupt) number.

Table 4 shows all of the possible XC164N interrupt sources and the corresponding hardware-related interrupt flags, vectors, vector locations and trap (interrupt) numbers.

Note: Interrupt nodes which are not assigned to peripherals (unassigned nodes), may be used to generate software controlled interrupt requests by setting the respective interrupt request bit (xIR).

Table 4 XC164N Interrupt Nodes

Source of Interrupt or PEC Service Request	Control Register	Vector Location[1)]	Trap Number
CAPCOM Register 0	CC1_CC0IC	xx'0040$_H$	10$_H$ / 16$_D$
CAPCOM Register 1	CC1_CC1IC	xx'0044$_H$	11$_H$ / 17$_D$
CAPCOM Register 2	CC1_CC2IC	xx'0048$_H$	12$_H$ / 18$_D$
CAPCOM Register 3	CC1_CC3IC	xx'004C$_H$	13$_H$ / 19$_D$
CAPCOM Register 4	CC1_CC4IC	xx'0050$_H$	14$_H$ / 20$_D$
CAPCOM Register 5	CC1_CC5IC	xx'0054$_H$	15$_H$ / 21$_D$
CAPCOM Register 6	CC1_CC6IC	xx'0058$_H$	16$_H$ / 22$_D$
CAPCOM Register 7	CC1_CC7IC	xx'005C$_H$	17$_H$ / 23$_D$
CAPCOM Register 8	CC1_CC8IC	xx'0060$_H$	18$_H$ / 24$_D$
CAPCOM Register 9	CC1_CC9IC	xx'0064$_H$	19$_H$ / 25$_D$
CAPCOM Register 10	CC1_CC10IC	xx'0068$_H$	1A$_H$ / 26$_D$
CAPCOM Register 11	CC1_CC11IC	xx'006C$_H$	1B$_H$ / 27$_D$
CAPCOM Register 12	CC1_CC12IC	xx'0070$_H$	1C$_H$ / 28$_D$
CAPCOM Register 13	CC1_CC13IC	xx'0074$_H$	1D$_H$ / 29$_D$
CAPCOM Register 14	CC1_CC14IC	xx'0078$_H$	1E$_H$ / 30$_D$
CAPCOM Register 15	CC1_CC15IC	xx'007C$_H$	1F$_H$ / 31$_D$
CAPCOM Register 16	CC2_CC16IC	xx'00C0$_H$	30$_H$ / 48$_D$
CAPCOM Register 17	CC2_CC17IC	xx'00C4$_H$	31$_H$ / 49$_D$
CAPCOM Register 18	CC2_CC18IC	xx'00C8$_H$	32$_H$ / 50$_D$
CAPCOM Register 19	CC2_CC19IC	xx'00CC$_H$	33$_H$ / 51$_D$
CAPCOM Register 20	CC2_CC20IC	xx'00D0$_H$	34$_H$ / 52$_D$
CAPCOM Register 21	CC2_CC21IC	xx'00D4$_H$	35$_H$ / 53$_D$
CAPCOM Register 22	CC2_CC22IC	xx'00D8$_H$	36$_H$ / 54$_D$
CAPCOM Register 23	CC2_CC23IC	xx'00DC$_H$	37$_H$ / 55$_D$
CAPCOM Register 24	CC2_CC24IC	xx'00E0$_H$	38$_H$ / 56$_D$
CAPCOM Register 25	CC2_CC25IC	xx'00E4$_H$	39$_H$ / 57$_D$
CAPCOM Register 26	CC2_CC26IC	xx'00E8$_H$	3A$_H$ / 58$_D$
CAPCOM Register 27	CC2_CC27IC	xx'00EC$_H$	3B$_H$ / 59$_D$
CAPCOM Register 28	CC2_CC28IC	xx'00F0$_H$	3C$_H$ / 60$_D$

Table 4 XC164N Interrupt Nodes (cont'd)

Source of Interrupt or PEC Service Request	Control Register	Vector Location[1)]	Trap Number
CAPCOM Register 29	CC2_CC29IC	xx'0110$_H$	44$_H$ / 68$_D$
CAPCOM Register 30	CC2_CC30IC	xx'0114$_H$	45$_H$ / 69$_D$
CAPCOM Register 31	CC2_CC31IC	xx'0118$_H$	46$_H$ / 70$_D$
CAPCOM Timer 0	CC1_T0IC	xx'0080$_H$	20$_H$ / 32$_D$
CAPCOM Timer 1	CC1_T1IC	xx'0084$_H$	21$_H$ / 33$_D$
CAPCOM Timer 7	CC2_T7IC	xx'00F4$_H$	3D$_H$ / 61$_D$
CAPCOM Timer 8	CC2_T8IC	xx'00F8$_H$	3E$_H$ / 62$_D$
GPT1 Timer 2	GPT12E_T2IC	xx'0088$_H$	22$_H$ / 34$_D$
GPT1 Timer 3	GPT12E_T3IC	xx'008C$_H$	23$_H$ / 35$_D$
GPT1 Timer 4	GPT12E_T4IC	xx'0090$_H$	24$_H$ / 36$_D$
GPT2 Timer 5	GPT12E_T5IC	xx'0094$_H$	25$_H$ / 37$_D$
GPT2 Timer 6	GPT12E_T6IC	xx'0098$_H$	26$_H$ / 38$_D$
GPT2 CAPREL Register	GPT12E_CRIC	xx'009C$_H$	27$_H$ / 39$_D$
Unassigned node	–	xx'00A0$_H$	28$_H$ / 40$_D$
Unassigned node	–	xx'00A4$_H$	29$_H$ / 41$_D$
ASC0 Transmit	ASC0_TIC	xx'00A8$_H$	2A$_H$ / 42$_D$
ASC0 Transmit Buffer	ASC0_TBIC	xx'011C$_H$	47$_H$ / 71$_D$
ASC0 Receive	ASC0_RIC	xx'00AC$_H$	2B$_H$ / 43$_D$
ASC0 Error	ASC0_EIC	xx'00B0$_H$	2C$_H$ / 44$_D$
ASC0 Autobaud	ASC0_ABIC	xx'017C$_H$	5F$_H$ / 95$_D$
SSC0 Transmit	SSC0_TIC	xx'00B4$_H$	2D$_H$ / 45$_D$
SSC0 Receive	SSC0_RIC	xx'00B8$_H$	2E$_H$ / 46$_D$
SSC0 Error	SSC0_EIC	xx'00BC$_H$	2F$_H$ / 47$_D$
PLL/OWD	PLLIC	xx'010C$_H$	43$_H$ / 67$_D$
ASC1 Transmit	ASC1_TIC	xx'0120$_H$	48$_H$ / 72$_D$
ASC1 Transmit Buffer	ASC1_TBIC	xx'0178$_H$	5E$_H$ / 94$_D$
ASC1 Receive	ASC1_RIC	xx'0124$_H$	49$_H$ / 73$_D$
ASC1 Error	ASC1_EIC	xx'0128$_H$	4A$_H$ / 74$_D$
ASC1 Autobaud	ASC1_ABIC	xx'0108$_H$	42$_H$ / 66$_D$
End of PEC Subchannel	EOPIC	xx'0130$_H$	4C$_H$ / 76$_D$

Table 4 XC164N Interrupt Nodes (cont'd)

Source of Interrupt or PEC Service Request	Control Register	Vector Location[1)]	Trap Number
CAPCOM6 Timer T12	CCU6_T12IC	xx'0134$_H$	4D$_H$ / 77$_D$
CAPCOM6 Timer T13	CCU6_T13IC	xx'0138$_H$	4E$_H$ / 78$_D$
CAPCOM6 Emergency	CCU6_EIC	xx'013C$_H$	4F$_H$ / 79$_D$
CAPCOM6	CCU6_IC	xx'0140$_H$	50$_H$ / 80$_D$
SSC1 Transmit	SSC1_TIC	xx'0144$_H$	51$_H$ / 81$_D$
SSC1 Receive	SSC1_RIC	xx'0148$_H$	52$_H$ / 82$_D$
SSC1 Error	SSC1_EIC	xx'014C$_H$	53$_H$ / 83$_D$
Unassigned node	–	xx'0150$_H$	54$_H$ / 84$_D$
Unassigned node	–	xx'0154$_H$	55$_H$ / 85$_D$
Unassigned node	–	xx'0158$_H$	56$_H$ / 86$_D$
Unassigned node	–	xx'015C$_H$	57$_H$ / 87$_D$
Unassigned node	–	xx'0164$_H$	59$_H$ / 89$_D$
Unassigned node	–	xx'0168$_H$	5A$_H$ / 90$_D$
Unassigned node	–	xx'016C$_H$	5B$_H$ / 91$_D$
Unassigned node	–	xx'0170$_H$	5C$_H$ / 92$_D$
Unassigned node	–	xx'0174$_H$	5D$_H$ / 93$_D$
Unassigned node	–	xx'0100$_H$	40$_H$ / 64$_D$
Unassigned node	–	xx'0104$_H$	41$_H$ / 65$_D$
Unassigned node	–	xx'012C$_H$	4B$_H$ / 75$_D$
Unassigned node	–	xx'00FC$_H$	3F$_H$ / 63$_D$
Unassigned node	–	xx'0160$_H$	58$_H$ / 88$_D$

1) Register VECSEG defines the segment where the vector table is located to.
Bitfield VECSC in register CPUCON1 defines the distance between two adjacent vectors. This table represents the default setting, with a distance of 4 (two words) between two vectors.

The XC164N also provides an excellent mechanism to identify and to process exceptions or error conditions that arise during run-time, so-called ‘Hardware Traps’. Hardware traps cause immediate non-maskable system reaction which is similar to a standard interrupt service (branching to a dedicated vector table location). The occurrence of a hardware trap is additionally signified by an individual bit in the trap flag register (TFR). Except when another higher prioritized trap service is in progress, a hardware trap will interrupt any actual program execution. In turn, hardware trap services can normally not be interrupted by standard or PEC interrupts.

Table 5 shows all of the possible exceptions or error conditions that can arise during run-time:

Table 5 Hardware Trap Summary

Exception Condition	Trap Flag	Trap Vector	Vector Location[1)]	Trap Number	Trap Priority
Reset Functions:	–				
• Hardware Reset		RESET	xx’0000$_H$	00$_H$	III
• Software Reset		RESET	xx’0000$_H$	00$_H$	III
• Watchdog Timer Overflow		RESET	xx’0000$_H$	00$_H$	III
Class A Hardware Traps:					
• Non-Maskable Interrupt	NMI	NMITRAP	xx’0008$_H$	02$_H$	II
• Stack Overflow	STKOF	STOTRAP	xx’0010$_H$	04$_H$	II
• Stack Underflow	STKUF	STUTRAP	xx’0018$_H$	06$_H$	II
• Software Break	SOFTBRK	SBRKTRAP	xx’0020$_H$	08$_H$	II
Class B Hardware Traps:					
• Undefined Opcode	UNDOPC	BTRAP	xx’0028$_H$	0A$_H$	I
• PMI Access Error	PACER	BTRAP	xx’0028$_H$	0A$_H$	I
• Protected Instruction Fault	PRTFLT	BTRAP	xx’0028$_H$	0A$_H$	I
• Illegal Word Operand Access	ILLOPA	BTRAP	xx’0028$_H$	0A$_H$	I
Reserved	–	–	[2C$_H$ - 3C$_H$]	[0B$_H$ - 0F$_H$]	–
Software Traps • TRAP Instruction	–	–	Any [xx’0000$_H$ - xx’01FC$_H$] in steps of 4$_H$	Any [00$_H$ - 7F$_H$]	Current CPU Priority

1) Register VECSEG defines the segment where the vector table is located to.

3.5 On-Chip Debug Support (OCDS)

The On-Chip Debug Support system provides a broad range of debug and emulation features built into the XC164N. The user software running on the XC164N can thus be debugged within the target system environment.

The OCDS is controlled by an external debugging device via the debug interface, consisting of the IEEE-1149-conforming JTAG port and a break interface. The debugger controls the OCDS via a set of dedicated registers accessible via the JTAG interface. Additionally, the OCDS system can be controlled by the CPU, e.g. by a monitor program. An injection interface allows the execution of OCDS-generated instructions by the CPU.

Multiple breakpoints can be triggered by on-chip hardware, by software, or by an external trigger input. Single stepping is supported as well as the injection of arbitrary instructions and read/write access to the complete internal address space. A breakpoint trigger can be answered with a CPU-halt, a monitor call, a data transfer, or/and the activation of an external signal.

Tracing data can be obtained via the JTAG interface or via the external bus interface for increased performance.

The debug interface uses a set of 6 interface signals (4 JTAG lines, 2 break lines) to communicate with external circuitry. These interface signals are realized as alternate functions on Port 3 pins.

Complete system emulation is supported by the New Emulation Technology (NET) interface.

3.6 Capture/Compare Units (CAPCOM1/2)

The CAPCOM units support generation and control of timing sequences on up to 32 channels with a maximum resolution of 1 system clock cycle (8 cycles in staggered mode). The CAPCOM units are typically used to handle high speed I/O tasks such as pulse and waveform generation, pulse width modulation (PMW), Digital to Analog (D/A) conversion, software timing, or time recording relative to external events.

Four 16-bit timers (T0/T1, T7/T8) with reload registers provide two independent time bases for each capture/compare register array.

The input clock for the timers is programmable to several prescaled values of the internal system clock, or may be derived from an overflow/underflow of timer T6 in module GPT2. This provides a wide range of variation for the timer period and resolution and allows precise adjustments to the application specific requirements. In addition, external count inputs for CAPCOM timers T0 and T7 allow event scheduling for the capture/compare registers relative to external events.

Both of the two capture/compare register arrays contain 16 dual purpose capture/compare registers, each of which may be individually allocated to either CAPCOM timer T0 or T1 (T7 or T8, respectively), and programmed for capture or

compare function.
12 registers of the CAPCOM2 module have each one port pin associated with it which serves as an input pin for triggering the capture function, or as an output pin to indicate the occurrence of a compare event.

Table 6 Compare Modes (CAPCOM1/2)

Compare Modes	Function
Mode 0	Interrupt-only compare mode; several compare interrupts per timer period are possible
Mode 1	Pin toggles on each compare match; several compare events per timer period are possible
Mode 2	Interrupt-only compare mode; only one compare interrupt per timer period is generated
Mode 3	Pin set ‘1’ on match; pin reset ‘0’ on compare timer overflow; only one compare event per timer period is generated
Double Register Mode	Two registers operate on one pin; pin toggles on each compare match; several compare events per timer period are possible
Single Event Mode	Generates single edges or pulses; can be used with any compare mode

When a capture/compare register has been selected for capture mode, the current contents of the allocated timer will be latched (‘captured’) into the capture/compare register in response to an external event at the port pin which is associated with this register. In addition, a specific interrupt request for this capture/compare register is generated. Either a positive, a negative, or both a positive and a negative external signal transition at the pin can be selected as the triggering event.

The contents of all registers which have been selected for one of the five compare modes are continuously compared with the contents of the allocated timers.

When a match occurs between the timer value and the value in a capture/compare register, specific actions will be taken based on the selected compare mode.

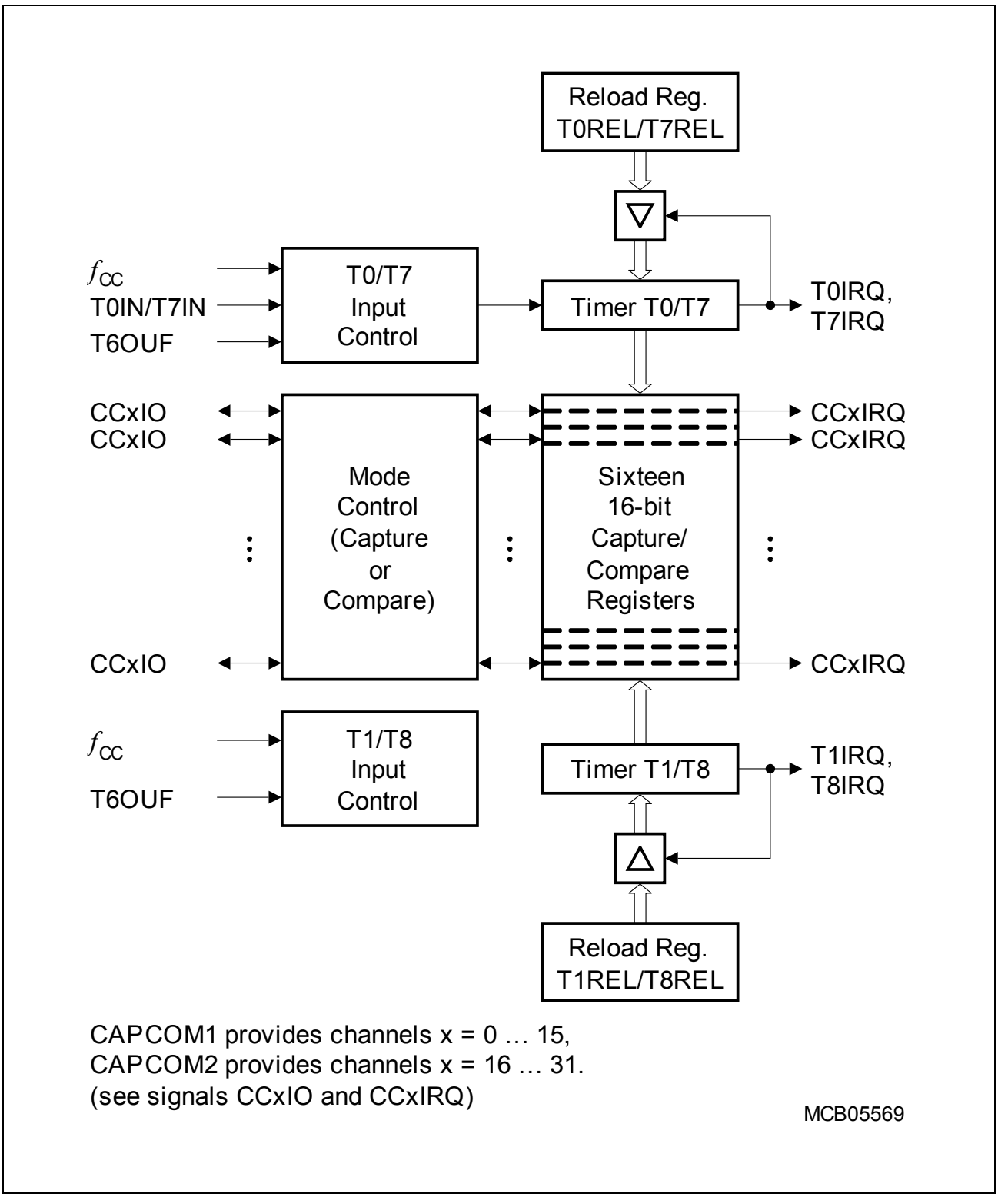

Figure 5 CAPCOM1/2 Unit Block Diagram

3.7 The Capture/Compare Unit CAPCOM6

The CAPCOM6 unit supports generation and control of timing sequences on up to three 16-bit capture/compare channels plus one independent 10-bit compare channel.
In compare mode the CAPCOM6 unit provides two output signals per channel which have inverted polarity and non-overlapping pulse transitions (deadtime control). The compare channel can generate a single PWM output signal and is further used to modulate the capture/compare output signals.
In capture mode the contents of compare timer T12 is stored in the capture registers upon a signal transition at pins CCx.

Compare timers T12 (16-bit) and T13 (10-bit) are free running timers which are clocked by the prescaled system clock.

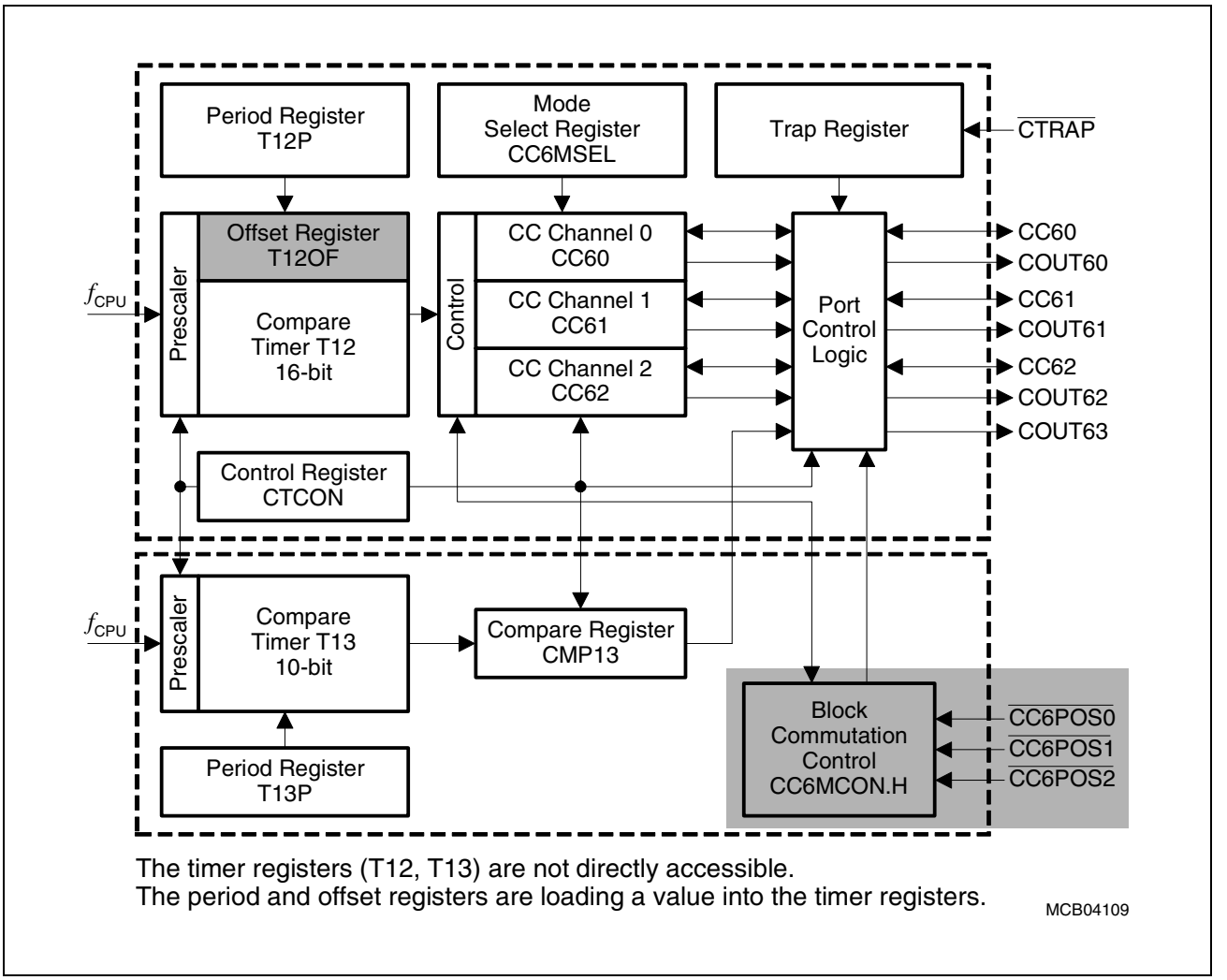

Figure 6 CAPCOM6 Block Diagram

For motor control applications both subunits may generate versatile multichannel PWM signals which are basically either controlled by compare timer T12 or by a typical hall sensor pattern at the interrupt inputs (block commutation).

3.8 General Purpose Timer (GPT12E) Unit

The GPT12E unit represents a very flexible multifunctional timer/counter structure which may be used for many different time related tasks such as event timing and counting, pulse width and duty cycle measurements, pulse generation, or pulse multiplication.

The GPT12E unit incorporates five 16-bit timers which are organized in two separate modules, GPT1 and GPT2. Each timer in each module may operate independently in a number of different modes, or may be concatenated with another timer of the same module.

Each of the three timers T2, T3, T4 of **module GPT1** can be configured individually for one of four basic modes of operation, which are Timer, Gated Timer, Counter, and Incremental Interface Mode. In Timer Mode, the input clock for a timer is derived from the system clock, divided by a programmable prescaler, while Counter Mode allows a timer to be clocked in reference to external events.
Pulse width or duty cycle measurement is supported in Gated Timer Mode, where the operation of a timer is controlled by the ‘gate’ level on an external input pin. For these purposes, each timer has one associated port pin (TxIN) which serves as gate or clock input. The maximum resolution of the timers in module GPT1 is 4 system clock cycles.

The count direction (up/down) for each timer is programmable by software or may additionally be altered dynamically by an external signal on a port pin (TxEUD) to facilitate e.g. position tracking.

In Incremental Interface Mode the GPT1 timers (T2, T3, T4) can be directly connected to the incremental position sensor signals A and B via their respective inputs TxIN and TxEUD. Direction and count signals are internally derived from these two input signals, so the contents of the respective timer Tx corresponds to the sensor position. The third position sensor signal TOP0 can be connected to an interrupt input.

Timer T3 has an output toggle latch (T3OTL) which changes its state on each timer over-flow/underflow. The state of this latch may be output on pin T3OUT e.g. for time out monitoring of external hardware components. It may also be used internally to clock timers T2 and T4 for measuring long time periods with high resolution.

In addition to their basic operating modes, timers T2 and T4 may be configured as reload or capture registers for timer T3. When used as capture or reload registers, timers T2 and T4 are stopped. The contents of timer T3 is captured into T2 or T4 in response to a signal at their associated input pins (TxIN). Timer T3 is reloaded with the contents of T2 or T4 triggered either by an external signal or by a selectable state transition of its toggle latch T3OTL. When both T2 and T4 are configured to alternately reload T3 on opposite state transitions of T3OTL with the low and high times of a PWM signal, this signal can be constantly generated without software intervention.

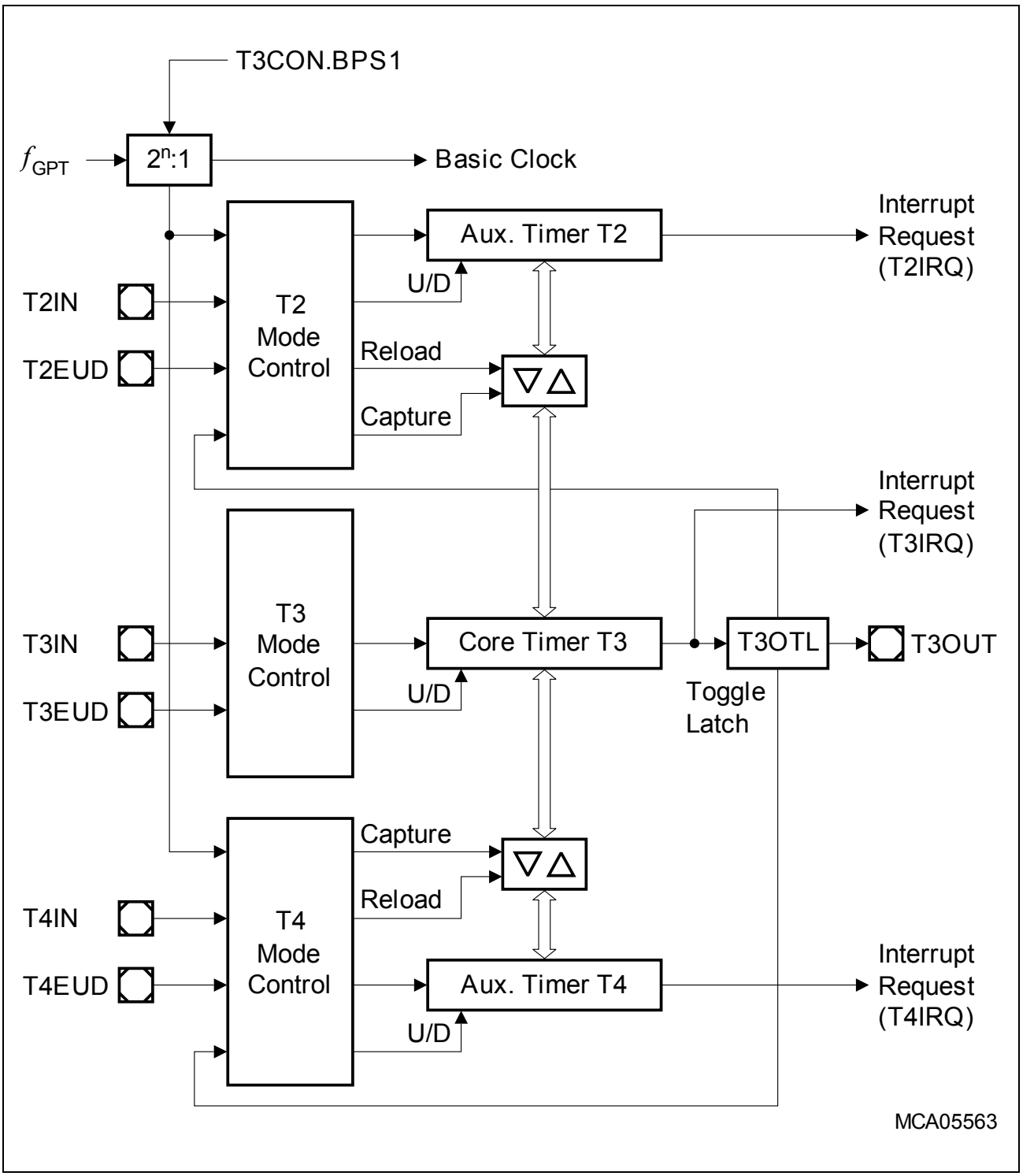

Figure 7 Block Diagram of GPT1

With its maximum resolution of 2 system clock cycles, the **GPT2 module** provides precise event control and time measurement. It includes two timers (T5, T6) and a capture/reload register (CAPREL). Both timers can be clocked with an input clock which is derived from the CPU clock via a programmable prescaler or with external signals. The

count direction (up/down) for each timer is programmable by software or may additionally be altered dynamically by an external signal on a port pin (TxEUD). Concatenation of the timers is supported via the output toggle latch (T6OTL) of timer T6, which changes its state on each timer overflow/underflow.

The state of this latch may be used to clock timer T5, and/or it may be output on pin T6OUT. The overflows/underflows of timer T6 can additionally be used to clock the CAPCOM1/2 timers, and to cause a reload from the CAPREL register.

The CAPREL register may capture the contents of timer T5 based on an external signal transition on the corresponding port pin (CAPIN), and timer T5 may optionally be cleared after the capture procedure. This allows the XC164N to measure absolute time differences or to perform pulse multiplication without software overhead.

The capture trigger (timer T5 to CAPREL) may also be generated upon transitions of GPT1 timer T3's inputs T3IN and/or T3EUD. This is especially advantageous when T3 operates in Incremental Interface Mode.

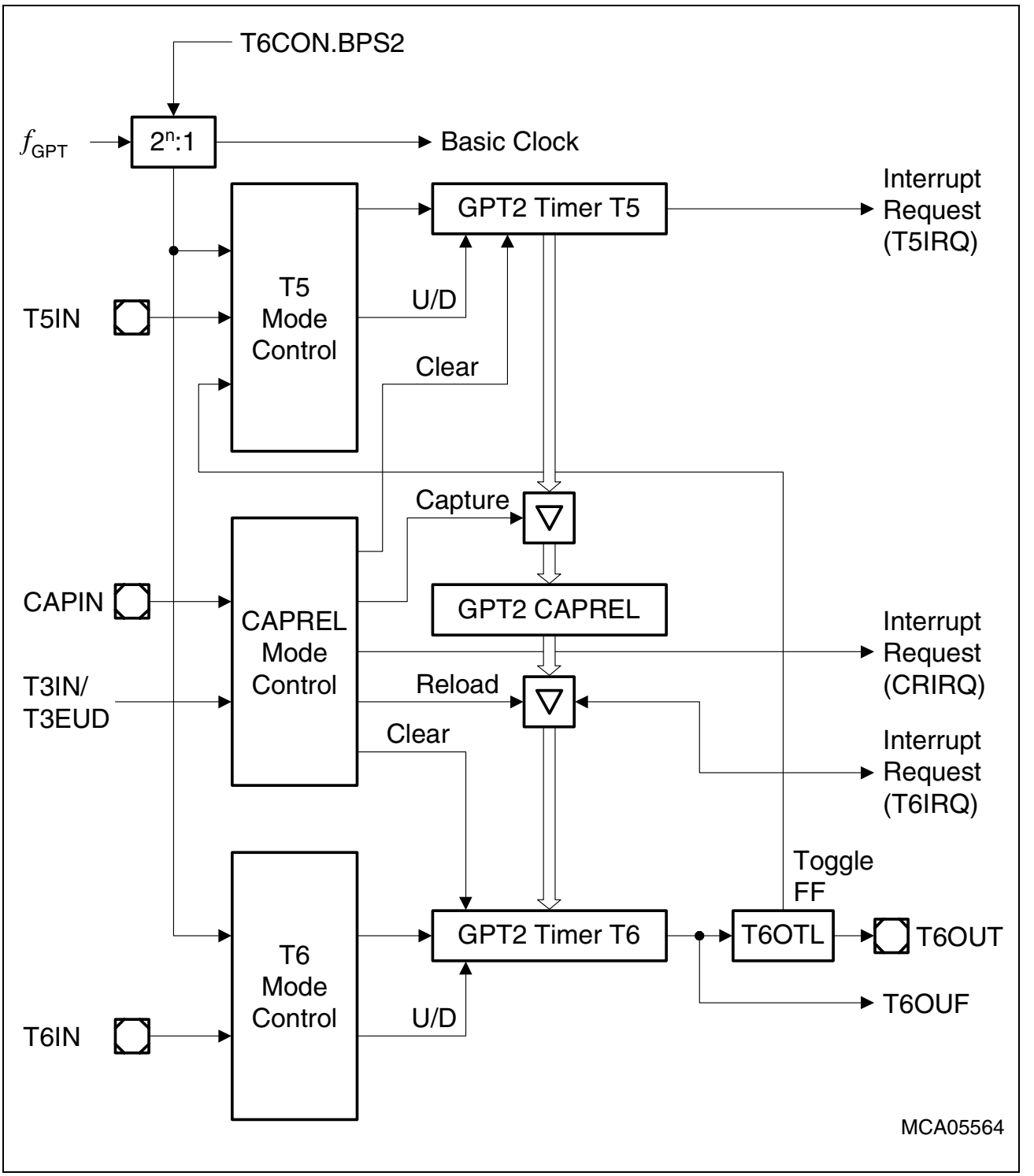

Figure 8 Block Diagram of GPT2

3.9 Real Time Clock

The Real Time Clock (RTC) module of the XC164N is directly clocked via a separate clock driver with the prescaled on-chip main oscillator frequency ($f_{RTC} = f_{OSCm}/32$). It is therefore independent from the selected clock generation mode of the XC164N.

The RTC basically consists of a chain of divider blocks:

- a selectable 8:1 divider (on - off)
- the reloadable 16-bit timer T14
- the 32-bit RTC timer block (accessible via registers RTCH and RTCL), made of:
  - a reloadable 10-bit timer
  - a reloadable 6-bit timer
  - a reloadable 6-bit timer
  - a reloadable 10-bit timer

All timers count up. Each timer can generate an interrupt request. All requests are combined to a common node request.

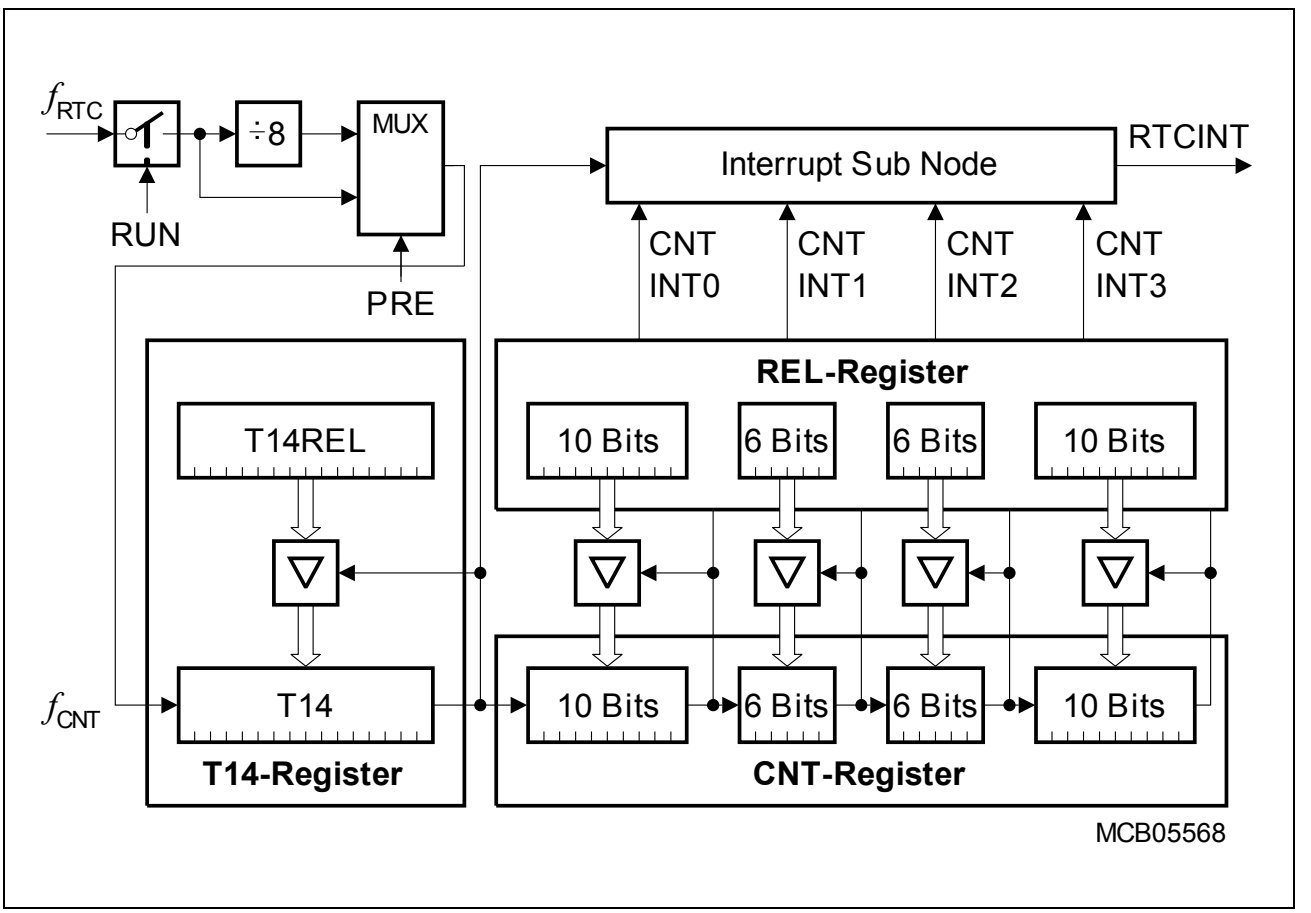

Figure 9 RTC Block Diagram

Note: The registers associated with the RTC are not affected by a reset in order to maintain the correct system time even when intermediate resets are executed.

The RTC module can be used for different purposes:

- System clock to determine the current time and date,
  optionally during idle mode, sleep mode, and power down mode.
- Cyclic time based interrupt, to provide a system time tick independent of CPU frequency and other resources, e.g. to wake up regularly from idle mode.
- 48-bit timer for long term measurements (maximum timespan is >> 100 years).
- Alarm interrupt for wake-up on a defined time.

3.10 Asynchronous/Synchronous Serial Interfaces (ASC0/ASC1)

The Asynchronous/Synchronous Serial Interfaces ASC0/ASC1 (USARTs) provide serial communication with other microcontrollers, processors, terminals or external peripheral components. They are upward compatible with the serial ports of the Infineon 8-bit microcontroller families and support full-duplex asynchronous communication and half-duplex synchronous communication. A dedicated baud rate generator with a fractional divider precisely generates all standard baud rates without oscillator tuning. For transmission, reception, error handling, and baudrate detection 5 separate interrupt vectors are provided.

In asynchronous mode, 8- or 9-bit data frames (with optional parity bit) are transmitted or received, preceded by a start bit and terminated by one or two stop bits. For multiprocessor communication, a mechanism to distinguish address from data bytes has been included (8-bit data plus wake-up bit mode). IrDA data transmissions up to 115.2 kbit/s with fixed or programmable IrDA pulse width are supported.

In synchronous mode, bytes (8 bits) are transmitted or received synchronously to a shift clock which is generated by the ASC0/1. The LSB is always shifted first.

In both modes, transmission and reception of data is FIFO-buffered. An autobaud detection unit allows to detect asynchronous data frames with its baudrate and mode with automatic initialization of the baudrate generator and the mode control bits.

A number of optional hardware error detection capabilities has been included to increase the reliability of data transfers. A parity bit can automatically be generated on transmission or be checked on reception. Framing error detection allows to recognize data frames with missing stop bits. An overrun error will be generated, if the last character received has not been read out of the receive buffer register at the time the reception of a new character is complete.

Summary of Features

- Full-duplex asynchronous operating modes
  - 8- or 9-bit data frames, LSB first, one or two stop bits, parity generation/checking
  - Baudrate from 2.5 Mbit/s to 0.6 bit/s (@ 40 MHz)
  - Multiprocessor mode for automatic address/data byte detection
  - Support for IrDA data transmission/reception up to max. 115.2 kbit/s (@ 40 MHz)
  - Loop-back capability
  - Auto baudrate detection
- Half-duplex 8-bit synchronous operating mode at 5 Mbit/s to 406.9 bit/s (@ 40 MHz)
- Buffered transmitter/receiver with FIFO support (8 entries per direction)
- Loop-back option available for testing purposes
- Interrupt generation on transmitter buffer empty condition, last bit transmitted condition, receive buffer full condition, error condition (frame, parity, overrun error), start and end of an autobaud detection

3.11 High Speed Synchronous Serial Channels (SSC0/SSC1)

The High Speed Synchronous Serial Channels SSC0/SSC1 support full-duplex and half-duplex synchronous communication. It may be configured so it interfaces with serially linked peripheral components, full SPI functionality is supported.

A dedicated baud rate generator allows to set up all standard baud rates without oscillator tuning. For transmission, reception and error handling three separate interrupt vectors are provided.

The SSC transmits or receives characters of 2 … 16 bits length synchronously to a shift clock which can be generated by the SSC (master mode) or by an external master (slave mode). The SSC can start shifting with the LSB or with the MSB and allows the selection of shifting and latching clock edges as well as the clock polarity.

A number of optional hardware error detection capabilities has been included to increase the reliability of data transfers. Transmit error and receive error supervise the correct handling of the data buffer. Phase error and baudrate error detect incorrect serial data.

Summary of Features

- Master or Slave mode operation
- Full-duplex or Half-duplex transfers
- Baudrate generation from 20 Mbit/s to 305.18 bit/s (@ 40 MHz)
- Flexible data format
  - Programmable number of data bits: 2 to 16 bits
  - Programmable shift direction: LSB-first or MSB-first
  - Programmable clock polarity: idle low or idle high
  - Programmable clock/data phase: data shift with leading or trailing clock edge
- Loop back option available for testing purposes
- Interrupt generation on transmitter buffer empty condition, receive buffer full condition, error condition (receive, phase, baudrate, transmit error)
- Three pin interface with flexible SSC pin configuration

3.12 Watchdog Timer

The Watchdog Timer represents one of the fail-safe mechanisms which have been implemented to prevent the controller from malfunctioning for longer periods of time.

The Watchdog Timer is always enabled after a reset of the chip, and can be disabled until the EINIT instruction has been executed (compatible mode), or it can be disabled and enabled at any time by executing instructions DISWDT and ENWDT (enhanced mode). Thus, the chip's start-up procedure is always monitored. The software has to be designed to restart the Watchdog Timer before it overflows. If, due to hardware or software related failures, the software fails to do so, the Watchdog Timer overflows and generates an internal hardware reset and pulls the $\overline{\text{RSTOUT}}$ pin low in order to allow external hardware components to be reset.

The Watchdog Timer is a 16-bit timer, clocked with the system clock divided by 2/4/128/256. The high byte of the Watchdog Timer register can be set to a prespecified reload value (stored in WDTREL) in order to allow further variation of the monitored time interval. Each time it is serviced by the application software, the high byte of the Watchdog Timer is reloaded and the low byte is cleared. Thus, time intervals between 13 µs and 419 ms can be monitored (@ 40 MHz).
The default Watchdog Timer interval after reset is 3.28 ms (@ 40 MHz).

3.13 Clock Generation

The Clock Generation Unit uses a programmable on-chip PLL with multiple prescalers to generate the clock signals for the XC164N with high flexibility. The master clock f_{MC} is the reference clock signal, and is output to the external system. The CPU clock f_{CPU} and the system clock f_{SYS} are derived from the master clock either directly (1:1) or via a 2:1 prescaler ($f_{SYS} = f_{CPU} = f_{MC} / 2$). See also **Section 4.3.1**.

The on-chip oscillator can drive an external crystal or accepts an external clock signal. The oscillator clock frequency can be multiplied by the on-chip PLL (by a programmable factor) or can be divided by a programmable prescaler factor.

If the bypass mode is used (direct drive or prescaler) the PLL can deliver an independent clock to monitor the clock signal generated by the on-chip oscillator. This PLL clock is independent from the XTAL1 clock. When the expected oscillator clock transitions are missing the Oscillator Watchdog (OWD) activates the PLL Unlock/OWD interrupt node and supplies the CPU with an emergency clock, the PLL clock signal. Under these circumstances the PLL will oscillate with its basic frequency.

The oscillator watchdog can be disabled by switching the PLL off. This reduces power consumption, but also no interrupt request will be generated in case of a missing oscillator clock.

Note: At the end of an external reset ($\overline{EA}$ = '0') the oscillator watchdog may be disabled via hardware by (externally) pulling the $\overline{RD}$ line low upon a reset, similar to the standard reset configuration.

3.14 Parallel Ports

The XC164N provides up to 79 I/O lines which are organized into six input/output ports and one input port. All port lines are bit-addressable, and all input/output lines are individually (bit-wise) programmable as inputs or outputs via direction registers. The I/O ports are true bidirectional ports which are switched to high impedance state when configured as inputs. The output drivers of some I/O ports can be configured (pin by pin) for push/pull operation or open-drain operation via control registers. During the internal reset, all port pins are configured as inputs (except for pin $\overline{RSTOUT}$).

The edge characteristics (shape) and driver characteristics (output current) of the port drivers can be selected via registers POCONx.

The input threshold of some ports is selectable (TTL or CMOS like), where the special CMOS like input threshold reduces noise sensitivity due to the input hysteresis. The input threshold may be selected individually for each byte of the respective ports.

All port lines have programmable alternate input or output functions associated with them. All port lines that are not used for these alternate functions may be used as general purpose IO lines.

Table 7 Summary of the XC164N's Parallel Ports

Port	Control	Alternate Functions
PORT0	Pad drivers	Address/Data lines or data lines[1)]
PORT1	Pad drivers	Address lines[2)]
		Capture inputs or compare outputs, Serial interface lines, Fast external interrupt inputs
Port 3	Pad drivers, Open drain, Input threshold	Timer control signals, serial interface lines, Optional bus control signal BHE/WRH, System clock output CLKOUT (or FOUT), Debug interface lines
Port 4	Pad drivers, Open drain, Input threshold	Segment address lines[3)]
		Optional chip select signals
Port 5	–	Timer control signals
Port 9	Pad drivers, Open drain, Input threshold	Capture inputs or compare outputs
Port 20	Pad drivers, Open drain	Bus control signals RD, WR/WRL, ALE, External access enable pin EA, Reset indication output RSTOUT

1) For multiplexed bus cycles.

2) For demultiplexed bus cycles.

3) For more than 64 Kbytes of external resources.

3.15 Power Management

The XC164N provides several means to control the power it consumes either at a given time or averaged over a certain timespan. Three mechanisms can be used (partly in parallel):

- **Power Saving Modes** switch the XC164N into a special operating mode (control via instructions).
  Idle Mode stops the CPU while the peripherals can continue to operate.
  Sleep Mode and Power Down Mode stop all clock signals and all operation (RTC may optionally continue running). Sleep Mode can be terminated by external interrupt signals.
- **Clock Generation Management** controls the distribution and the frequency of internal and external clock signals. While the clock signals for currently inactive parts of logic are disabled automatically, the user can reduce the XC164N's CPU clock frequency which drastically reduces the consumed power.
  External circuitry can be controlled via the programmable frequency output FOUT.
- **Peripheral Management** permits temporary disabling of peripheral modules (control via register SYSCON3). Each peripheral can separately be disabled/enabled.

The on-chip RTC supports intermittent operation of the XC164N by generating cyclic wake-up signals. This offers full performance to quickly react on action requests while the intermittent sleep phases greatly reduce the average power consumption of the system.

3.16 Instruction Set Summary

Table 8 lists the instructions of the XC164N in a condensed way.
The various addressing modes that can be used with a specific instruction, the operation of the instructions, parameters for conditional execution of instructions, and the opcodes for each instruction can be found in the **"Instruction Set Manual"**.

This document also provides a detailed description of each instruction.

Table 8 Instruction Set Summary

Mnemonic	Description	Bytes
ADD(B)	Add word (byte) operands	2 / 4
ADDC(B)	Add word (byte) operands with Carry	2 / 4
SUB(B)	Subtract word (byte) operands	2 / 4
SUBC(B)	Subtract word (byte) operands with Carry	2 / 4
MUL(U)	(Un)Signed multiply direct GPR by direct GPR (16- × 16-bit)	2
DIV(U)	(Un)Signed divide register MDL by direct GPR (16-/16-bit)	2
DIVL(U)	(Un)Signed long divide reg. MD by direct GPR (32-/16-bit)	2
CPL(B)	Complement direct word (byte) GPR	2
NEG(B)	Negate direct word (byte) GPR	2
AND(B)	Bitwise AND, (word/byte operands)	2 / 4
OR(B)	Bitwise OR, (word/byte operands)	2 / 4
XOR(B)	Bitwise exclusive OR, (word/byte operands)	2 / 4
BCLR/BSET	Clear/Set direct bit	2
BMOV(N)	Move (negated) direct bit to direct bit	4
BAND/BOR/BXOR	AND/OR/XOR direct bit with direct bit	4
BCMP	Compare direct bit to direct bit	4
BFLDH/BFLDL	Bitwise modify masked high/low byte of bit-addressable direct word memory with immediate data	4
CMP(B)	Compare word (byte) operands	2 / 4
CMPD1/2	Compare word data to GPR and decrement GPR by 1/2	2 / 4
CMPI1/2	Compare word data to GPR and increment GPR by 1/2	2 / 4
PRIOR	Determine number of shift cycles to normalize direct word GPR and store result in direct word GPR	2
SHL/SHR	Shift left/right direct word GPR	2

Table 8 Instruction Set Summary (cont'd)

Mnemonic	Description	Bytes
ROL/ROR	Rotate left/right direct word GPR	2
ASHR	Arithmetic (sign bit) shift right direct word GPR	2
MOV(B)	Move word (byte) data	2 / 4
MOVBS/Z	Move byte operand to word op. with sign/zero extension	2 / 4
JMPA/I/R	Jump absolute/indirect/relative if condition is met	4
JMPS	Jump absolute to a code segment	4
JB(C)	Jump relative if direct bit is set (and clear bit)	4
JNB(S)	Jump relative if direct bit is not set (and set bit)	4
CALLA/I/R	Call absolute/indirect/relative subroutine if condition is met	4
CALLS	Call absolute subroutine in any code segment	4
PCALL	Push direct word register onto system stack and call absolute subroutine	4
TRAP	Call interrupt service routine via immediate trap number	2
PUSH/POP	Push/pop direct word register onto/from system stack	2
SCXT	Push direct word register onto system stack and update register with word operand	4
RET(P)	Return from intra-segment subroutine (and pop direct word register from system stack)	2
RETS	Return from inter-segment subroutine	2
RETI	Return from interrupt service subroutine	2
SBRK	Software Break	2
SRST	Software Reset	4
IDLE	Enter Idle Mode	4
PWRDN	Enter Power Down Mode (supposes $\overline{\text{NMI}}$-pin being low)	4
SRVWDT	Service Watchdog Timer	4
DISWDT/ENWDT	Disable/Enable Watchdog Timer	4
EINIT	End-of-Initialization Register Lock	4
ATOMIC	Begin ATOMIC sequence	2
EXTR	Begin EXTended Register sequence	2
EXTP(R)	Begin EXTended Page (and Register) sequence	2 / 4
EXTS(R)	Begin EXTended Segment (and Register) sequence	2 / 4

Table 8 Instruction Set Summary (cont'd)

Mnemonic	Description	Bytes
NOP	Null operation	2
CoMUL/CoMAC	Multiply (and accumulate)	4
CoADD/CoSUB	Add/Subtract	4
Co(A)SHR	(Arithmetic) Shift right	4
CoSHL	Shift left	4
CoLOAD/STORE	Load accumulator/Store MAC register	4
CoCMP	Compare	4
CoMAX/MIN	Maximum/Minimum	4
CoABS/CoRND	Absolute value/Round accumulator	4
CoMOV	Data move	4
CoNEG/NOP	Negate accumulator/Null operation	4

4 Electrical Parameters

4.1 General Parameters

Table 9 Absolute Maximum Ratings

Parameter	Symbol	Limit Values		Unit	Notes
		Min.	Max.		
Storage temperature	T_{ST}	-65	150	°C	1)
Junction temperature	T_J	-40	150	°C	under bias
Voltage on V_{DDI} pins with respect to ground (V_{SS})	V_{DDI}	-0.5	3.25	V	–
Voltage on V_{DDP} pins with respect to ground (V_{SS})	V_{DDP}	-0.5	6.2	V	–
Voltage on any pin with respect to ground (V_{SS})	V_{IN}	-0.5	V_{DDP} + 0.5	V	2)
Input current on any pin during overload condition	–	-10	10	mA	–
Absolute sum of all input currents during overload condition	–	–	|100|	mA	–

1) Moisture Sensitivity Level (MSL) 3, conforming to Jedec J-STD-020C for 260 °C for PG-TQFP-100-5, and 240 °C for P-TQFP-100-16.

2) Input pin XTAL1 belongs to the core voltage domain. Therefore, input voltages must be within the range defined for V_{DDI}.

Note: Stresses above those listed under "Absolute Maximum Ratings" may cause permanent damage to the device. This is a stress rating only and functional operation of the device at these or any other conditions above those indicated in the operational sections of this specification is not implied. Exposure to absolute maximum rating conditions for extended periods may affect device reliability.
During absolute maximum rating overload conditions ($V_{IN} > V_{DDP}$ or $V_{IN} < V_{SS}$) the voltage on V_{DDP} pins with respect to ground (V_{SS}) must not exceed the values defined by the absolute maximum ratings.

Operating Conditions

The following operating conditions must not be exceeded to ensure correct operation of the XC164N. All parameters specified in the following sections refer to these operating conditions, unless otherwise noticed.

Table 10 Operating Condition Parameters

Parameter	Symbol	Limit Values		Unit	Notes
		Min.	Max.		
Digital supply voltage for the core	V_{DDI}	2.35	2.7	V	Active mode, $f_{CPU} = f_{CPUmax}$ 1)2)
Digital supply voltage for IO pads	V_{DDP}	4.4	5.5	V	Active mode 2)3)
Supply Voltage Difference	ΔV_{DD}	-0.5	–	V	V_{DDP} - V_{DDI} 4)
Digital ground voltage	V_{SS}	0		V	Reference voltage
Overload current	I_{OV}	-5	5	mA	Per IO pin 5)6)
		-2	5	mA	Per Port 5 input pin 5)6)
Overload current coupling factor for Port 5 inputs 7)	K_{OVA}	–	1.0×10^{-4}	–	$I_{OV} > 0$
		–	1.5×10^{-3}	–	$I_{OV} < 0$
Overload current coupling factor for digital I/O pins 7)	K_{OVD}	–	5.0×10^{-3}	–	$I_{OV} > 0$
		–	1.0×10^{-2}	–	$I_{OV} < 0$
Absolute sum of overload currents	$\Sigma\|I_{OV}\|$	–	50	mA	6)
External Load Capacitance	C_L	–	50	pF	Pin drivers in **default** mode 8)
Ambient temperature	T_A	–	–	°C	see **Table 1**

1) f_{CPUmax} = 40 MHz for devices marked … 40F, f_{CPUmax} = 20 MHz for devices marked … 20F.

2) External circuitry must guarantee low-level at the $\overline{\text{RSTIN}}$ pin at least until both power supply voltages have reached the operating range.

3) The specified voltage range is allowed for operation. The range limits may be reached under extreme operating conditions. However, specified parameters, such as leakage currents, refer to the standard operating voltage range of V_{DDP} = 4.75 V to 5.25 V.

4) This limitation must be fulfilled under all operating conditions including power-ramp-up, power-ramp-down, and power-save modes.

5) Overload conditions occur if the standard operating conditions are exceeded, i.e. the voltage on any pin exceeds the specified range: $V_{OV} > V_{DDP} + 0.5$ V ($I_{OV} > 0$) or $V_{OV} < V_{SS} - 0.5$ V ($I_{OV} < 0$). The absolute sum of input overload currents on all pins may not exceed **50 mA**. The supply voltages must remain within the specified limits.
   Proper operation is not guaranteed if overload conditions occur on functional pins such as XTAL1, $\overline{RD}$, $\overline{WR}$, etc.
6) Not subject to production test - verified by design/characterization.
7) An overload current (I_{OV}) through a pin injects a certain error current (I_{INJ}) into the adjacent pins. This error current adds to the respective pin's leakage current (I_{OZ}). The amount of error current depends on the overload current and is defined by the overload coupling factor K_{OV}. The polarity of the injected error current is inverse compared to the polarity of the overload current that produces it.
   The total current through a pin is $|I_{TOT}| = |I_{OZ}| + (|I_{OV}| \times K_{OV})$.
8) The timing is valid for pin drivers operating in default current mode (selected after reset). Reducing the output current may lead to increased delays or reduced driving capability (C_L).

Parameter Interpretation

The parameters listed in the following partly represent the characteristics of the XC164N and partly its demands on the system. To aid in interpreting the parameters right, when evaluating them for a design, they are marked in column "Symbol":

CC (**C**ontroller **C**haracteristics):
The logic of the XC164N will provide signals with the respective characteristics.

SR (**S**ystem **R**equirement):
The external system must provide signals with the respective characteristics to the XC164N.

4.2 DC Parameters

Table 11 DC Characteristics (Operating Conditions apply)[1)]

Parameter	Symbol		Limit Values		Unit	Test Condition
			Min.	Max.		
Input low voltage TTL (all except XTAL1)	V_{IL}	SR	-0.5	$0.2 \times V_{DDP}$ - 0.1	V	–
Input low voltage XTAL1[2)]	V_{ILC}	SR	-0.5	$0.3 \times V_{DDI}$	V	–
Input low voltage (Special Threshold)	V_{ILS}	SR	-0.5	$0.45 \times V_{DDP}$	V	[3)]
Input high voltage TTL (all except XTAL1)	V_{IH}	SR	$0.2 \times V_{DDP}$ + 0.9	V_{DDP} + 0.5	V	–
Input high voltage XTAL1[2)]	V_{IHC}	SR	$0.7 \times V_{DDI}$	V_{DDI} + 0.5	V	–
Input high voltage (Special Threshold)	V_{IHS}	SR	$0.8 \times V_{DDP}$ - 0.2	V_{DDP} + 0.5	V	[3)]
Input Hysteresis (Special Threshold)	HYS		$0.04 \times V_{DDP}$	–	V	V_{DDP} in [V], Series resistance = 0 Ω[3)]
Output low voltage	V_{OL}	CC	–	1.0	V	$I_{OL} \le I_{OLmax}$[4)]
			–	0.45	V	$I_{OL} \le I_{OLnom}$[4)5)]
Output high voltage[6)]	V_{OH}	CC	V_{DDP} - 1.0	–	V	$I_{OH} \ge I_{OHmax}$[4)]
			V_{DDP} - 0.45	–	V	$I_{OH} \ge I_{OHnom}$[4)5)]
Input leakage current (Port 5)[7)]	I_{OZ1}	CC	–	±300	nA	$0\ V < V_{IN} < V_{DDP}$, $T_A \le 125$ °C
				±200	nA	$0\ V < V_{IN} < V_{DDP}$, $T_A \le 85$ °C[14)]
Input leakage current (all other[8)])[7)]	I_{OZ2}	CC	–	±500	nA	$0.45\ V < V_{IN} < V_{DDP}$
Configuration pull-up current[9)]	I_{CPUH}[10)]		–	-10	µA	$V_{IN} = V_{IHmin}$
	I_{CPUL}[11)]		-100	–	µA	$V_{IN} = V_{ILmax}$
Configuration pull-down current[12)]	I_{CPDL}[10)]		–	10	µA	$V_{IN} = V_{ILmax}$
	I_{CPDH}[11)]		120	–	µA	$V_{IN} = V_{IHmin}$

Table 11 DC Characteristics (Operating Conditions apply)[1] (cont'd)

Parameter	Symbol		Limit Values		Unit	Test Condition
			Min.	Max.		
Level inactive hold current[13]	I_{LHI}[10]		–	-10	µA	V_{OUT} = 0.5 × V_{DDP}
Level active hold current[13]	I_{LHA}[11]		-100	–	µA	V_{OUT} = 0.45 V
XTAL1 input current	I_{IL}	CC	–	±20	µA	0 V < V_{IN} < V_{DDI}
Pin capacitance[14] (digital inputs/outputs)	C_{IO}	CC	–	10	pF	–

1) Keeping signal levels within the limits specified in this table, ensures operation without overload conditions. For signal levels outside these specifications, also refer to the specification of the overload current I_{OV}.

2) If XTAL1 is driven by a crystal, reaching an amplitude (peak to peak) of 0.4 × V_{DDI} is sufficient.

3) This parameter is tested for P3, P4, P9.

4) The maximum deliverable output current of a port driver depends on the selected output driver mode, see **Table 12, Current Limits for Port Output Drivers**. The limit for pin groups must be respected.

5) As a rule, with decreasing output current the output levels approach the respective supply level ($V_{OL} \rightarrow V_{SS}$, $V_{OH} \rightarrow V_{DDP}$). However, only the levels for nominal output currents are guaranteed.

6) This specification is not valid for outputs which are switched to open drain mode. In this case the respective output will float and the voltage results from the external circuitry.

7) An additional error current (I_{INJ}) will flow if an overload current flows through an adjacent pin. Please refer to the definition of the overload coupling factor K_{OV}.

8) The driver of P3.15 is designed for faster switching, because this pin can deliver the reference clock for the bus interface (CLKOUT). The maximum leakage current for P3.15 is, therefore, increased to 1 µA.

9) This specification is valid during Reset for configuration on $\overline{RD}$, $\overline{WR}$, $\overline{EA}$, PORT0

10) The maximum current may be drawn while the respective signal line remains inactive.

11) The minimum current must be drawn to drive the respective signal line active.

12) This specification is valid during Reset for configuration on ALE.

13) This specification is valid during Reset for pins P4.3-0, which can act as $\overline{CS}$ outputs, and for P3.12.

14) Not subject to production test - verified by design/characterization.

Table 12 Current Limits for Port Output Drivers

Port Output Driver Mode	Maximum Output Current (I_{OLmax}, $-I_{OHmax}$)[1]	Nominal Output Current (I_{OLnom}, $-I_{OHnom}$)
Strong driver	10 mA	2.5 mA
Medium driver	4.0 mA	1.0 mA
Weak driver	0.5 mA	0.1 mA

1) An output current above $|I_{OXnom}|$ may be drawn from up to three pins at the same time.
For any group of 16 neighboring port output pins the total output current in each direction (ΣI_{OL} and $\Sigma\text{-}I_{OH}$) must remain below 50 mA.

Table 13 Power Consumption XC164N (Operating Conditions apply)

Parameter	Sym-bol	Limit Values		Unit	Test Condition
		Min.	Max.		
Power supply current (active) with all peripherals active	I_{DDI}	–	10 + 3.0 × f_{CPU}	mA	f_{CPU} in [MHz] 1)2)
Pad supply current	I_{DDP}	–	5	mA	3)
Idle mode supply current with all peripherals active	I_{IDX}	–	10 + 1.3 × f_{CPU}	mA	f_{CPU} in [MHz] 2)
Sleep and Power down mode supply current caused by leakage 4)	I_{PDL} 5)	–	128,000 × $e^{-\alpha}$	mA	V_{DDI} = V_{DDImax} 6) T_J in [°C] α = 4670 / (273 + T_J)
Sleep and Power down mode supply current caused by leakage and the RTC running, clocked by the main oscillator 4)	I_{PDM} 7)	–	0.6 + 0.02 × f_{OSC} + I_{PDL}	mA	V_{DDI} = V_{DDImax} f_{OSC} in [MHz]

1) During Flash programming or erase operations the supply current is increased by max. 5 mA.

2) The supply current is a function of the operating frequency. This dependency is illustrated in **Figure 10**. These parameters are tested at V_{DDImax} and maximum CPU clock frequency with all outputs disconnected and all inputs at V_{IL} or V_{IH}.

3) The pad supply voltage pins (V_{DDP}) mainly provides the current consumed by the pin output drivers. A small amount of current is consumed even though no outputs are driven, because the drivers' input stages are switched and also the Flash module draws some power from the V_{DDP} supply.

4) The total supply current in Sleep and Power down mode is the sum of the temperature dependent leakage current and the frequency dependent current for RTC and main oscillator (if active).

5) This parameter is determined mainly by the transistor leakage currents. This current heavily depends on the junction temperature (see **Figure 12**). The junction temperature T_J is the same as the ambient temperature T_A if no current flows through the port output drivers. Otherwise, the resulting temperature difference must be taken into account.

6) All inputs (including pins configured as inputs) at 0 V to 0.1 V or at V_{DDP} - 0.1 V to V_{DDP}, all outputs (including pins configured as outputs) disconnected. This parameter is tested at 25 °C and is valid for $T_J \geq 25$ °C.

7) This parameter is determined mainly by the current consumed by the oscillator switched to low gain mode (see **Figure 11**). This current, however, is influenced by the external oscillator circuitry (crystal, capacitors). The given values refer to a typical circuitry and may change in case of a not optimized external oscillator circuitry.

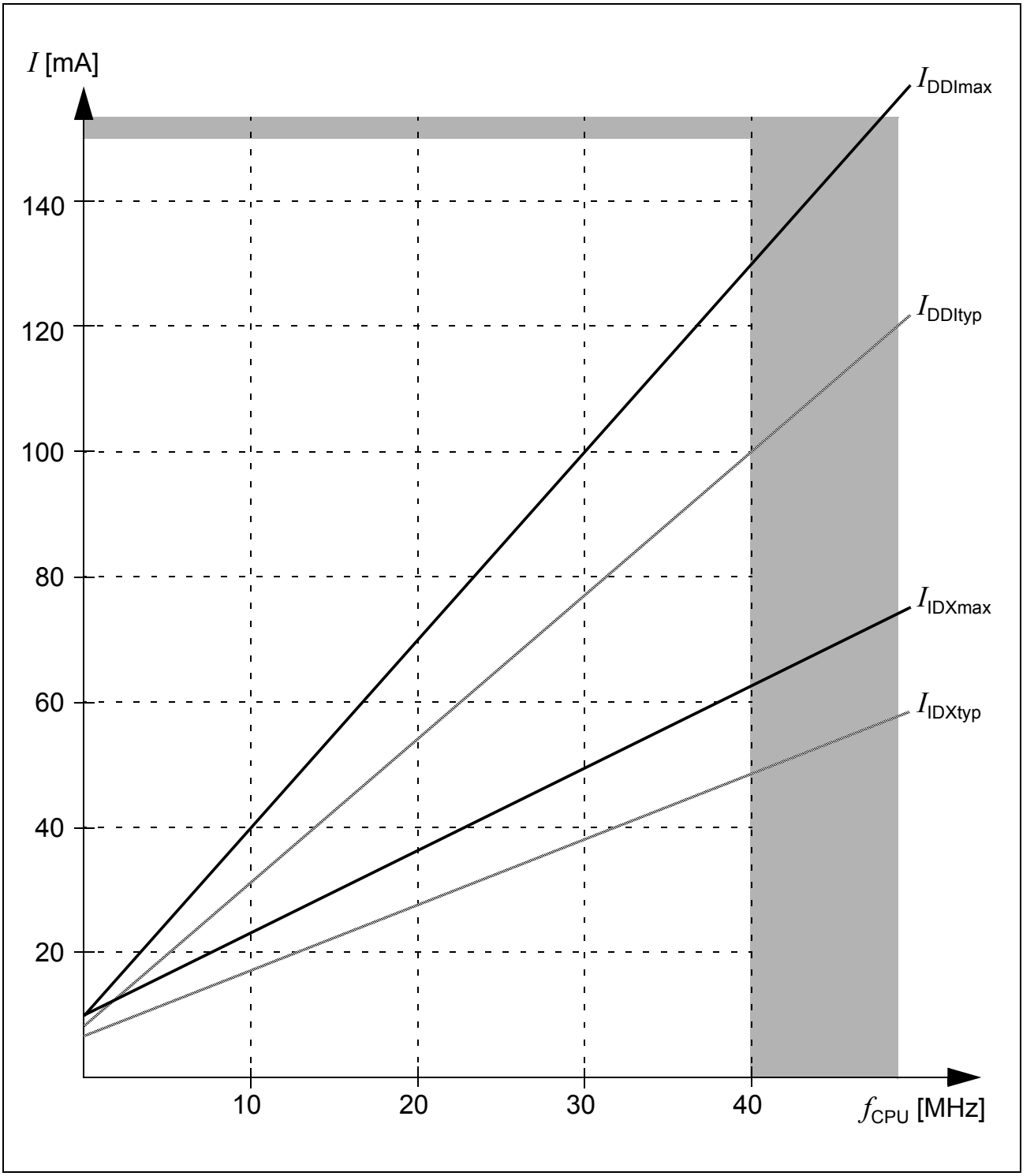

Figure 10 Supply/Idle Current as a Function of Operating Frequency

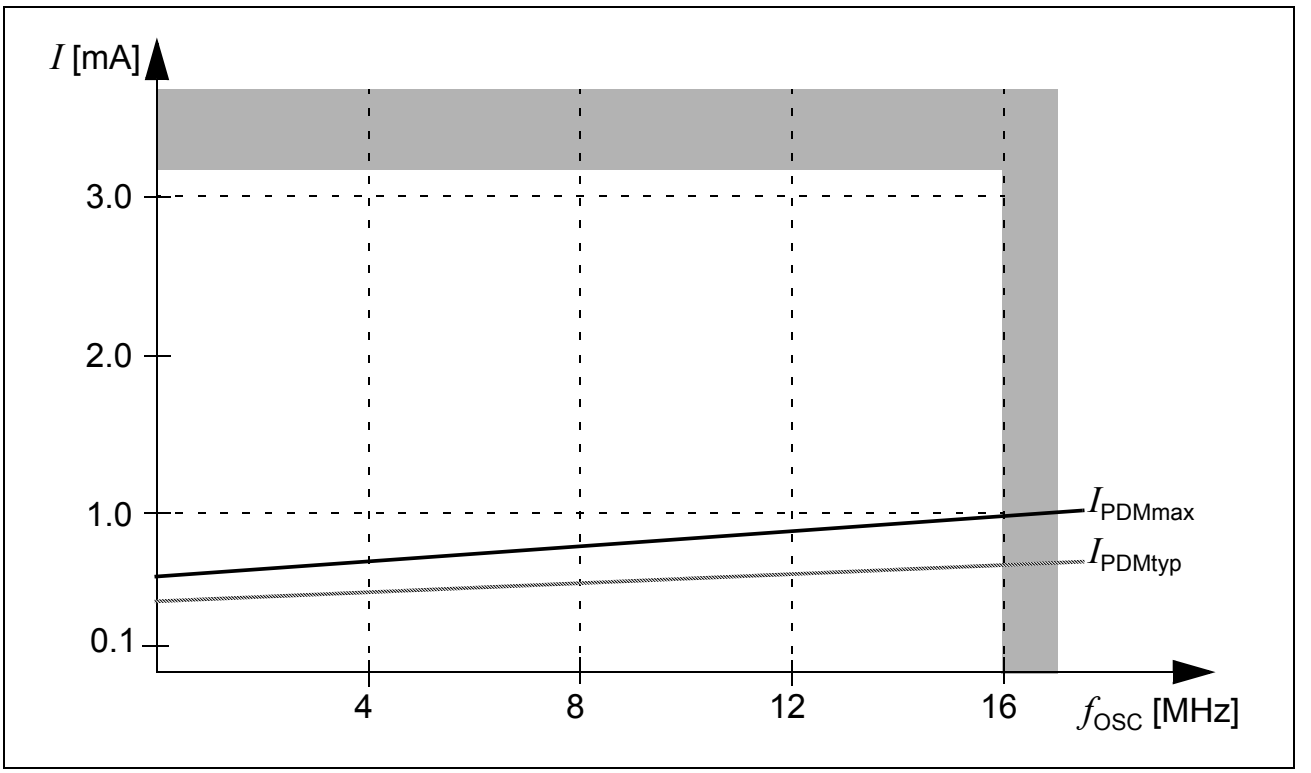

Figure 11 **Sleep and Power Down Supply Current due to RTC and Oscillator Running, as a Function of Oscillator Frequency**

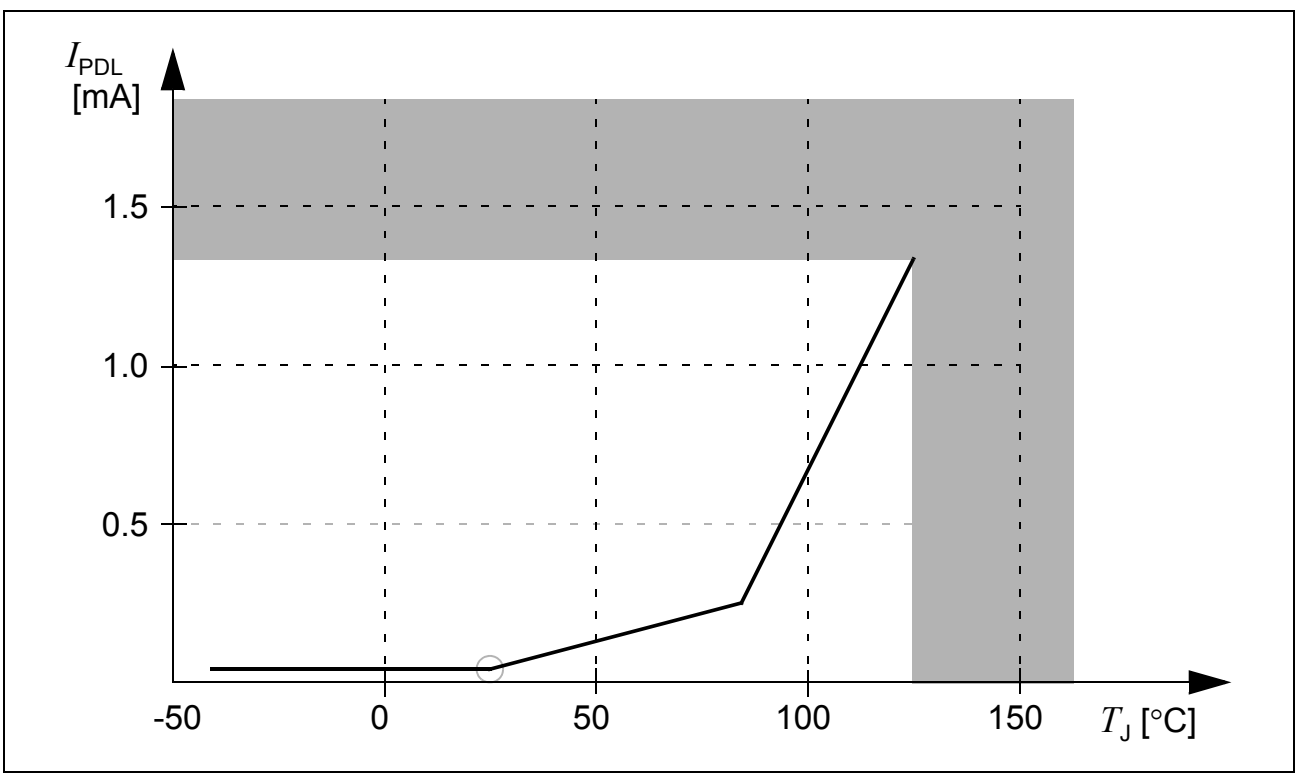

Figure 12 **Sleep and Power Down Leakage Supply Current as a Function of Temperature**

4.3 AC Parameters

4.3.1 Definition of Internal Timing

The internal operation of the XC164N is controlled by the internal master clock f_{MC}.

The master clock signal f_{MC} can be generated from the oscillator clock signal f_{OSC} via different mechanisms. The duration of master clock periods (TCMs) and their variation (and also the derived external timing) depend on the used mechanism to generate f_{MC}. This influence must be regarded when calculating the timings for the XC164N.

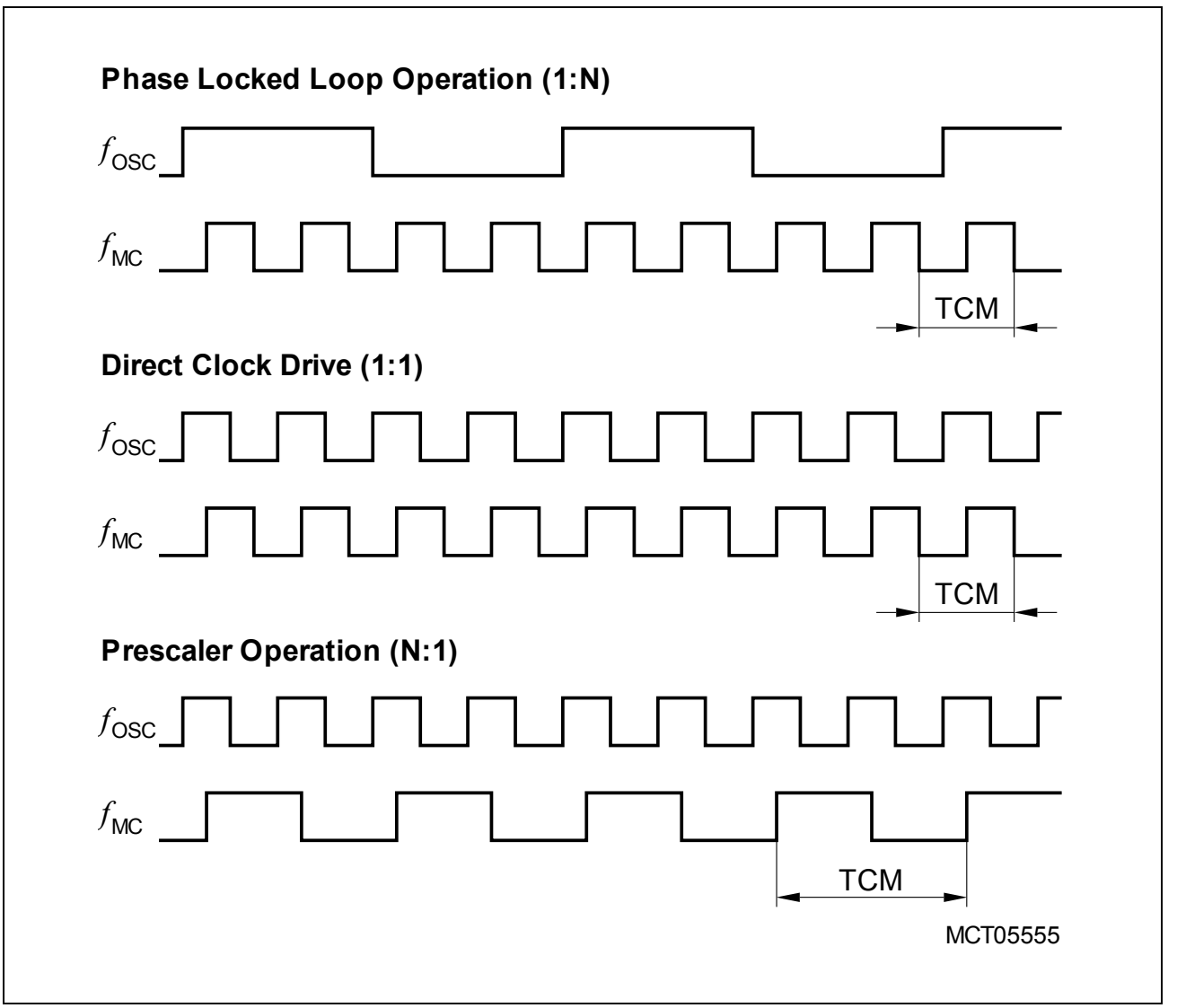

Figure 13 Generation Mechanisms for the Master Clock

*Note: The example for PLL operation shown in **Figure 13** refers to a PLL factor of 1:4, the example for prescaler operation refers to a divider factor of 2:1.*

The used mechanism to generate the master clock is selected by register PLLCON.

CPU and EBC are clocked with the CPU clock signal f_{CPU}. The CPU clock can have the same frequency as the master clock ($f_{CPU} = f_{MC}$) or can be the master clock divided by two: $f_{CPU} = f_{MC} / 2$. This factor is selected by bit CPSYS in register SYSCON1.

The specification of the external timing (AC Characteristics) depends on the period of the CPU clock, called “TCP”.

The other peripherals are supplied with the system clock signal f_{SYS} which has the same frequency as the CPU clock signal f_{CPU}.

Bypass Operation

When bypass operation is configured (PLLCTRL = $0x_B$) the master clock is derived from the internal oscillator (input clock signal XTAL1) through the input- and output-prescalers:

$f_{MC} = f_{OSC} / ((PLLIDIV+1) \times (PLLODIV+1))$.

If both divider factors are selected as ‘1’ (PLLIDIV = PLLODIV = ‘0’) the frequency of f_{MC} directly follows the frequency of f_{OSC} so the high and low time of f_{MC} is defined by the duty cycle of the input clock f_{OSC}.

The lowest master clock frequency is achieved by selecting the maximum values for both divider factors:

$f_{MC} = f_{OSC} / ((3 + 1) \times (14 + 1)) = f_{OSC} / 60$.

Phase Locked Loop (PLL)

When PLL operation is configured (PLLCTRL = 11_B) the on-chip phase locked loop is enabled and provides the master clock. The PLL multiplies the input frequency by the factor **F** ($f_{MC} = f_{OSC} \times$ **F**) which results from the input divider, the multiplication factor, and the output divider (**F** = PLLMUL+1 / (PLLIDIV+1 $\times$ PLLODIV+1)). The PLL circuit synchronizes the master clock to the input clock. This synchronization is done smoothly, i.e. the master clock frequency does not change abruptly.

Due to this adaptation to the input clock the frequency of f_{MC} is constantly adjusted so it is locked to f_{OSC}. The slight variation causes a jitter of f_{MC} which also affects the duration of individual TCMs.

The timing listed in the AC Characteristics refers to TCPs. Because f_{CPU} is derived from f_{MC}, the timing must be calculated using the minimum TCP possible under the respective circumstances.
The actual minimum value for TCP depends on the jitter of the PLL. As the PLL is constantly adjusting its output frequency so it corresponds to the applied input frequency (crystal or oscillator) the relative deviation for periods of more than one TCP is lower than for one single TCP (see formula and **Figure 14**).

This is especially important for bus cycles using waitstates and e.g. for the operation of timers, serial interfaces, etc. For all slower operations and longer periods (e.g. pulse train

generation or measurement, lower baudrates, etc.) the deviation caused by the PLL jitter is negligible.

The value of the accumulated PLL jitter depends on the number of consecutive VCO output cycles within the respective timeframe. The VCO output clock is divided by the output prescaler (K = PLLODIV+1) to generate the master clock signal f_{MC}. Therefore, the number of VCO cycles can be represented as K × **N**, where **N** is the number of consecutive f_{MC} cycles (TCM).

For a period of **N** × TCM the accumulated PLL jitter is defined by the deviation D_N:

D_N [ns] = ±(1.5 + 6.32 × **N** / f_{MC}); f_{MC} in [MHz], **N** = number of consecutive TCMs.

So, for a period of 3 TCMs @ 20 MHz and K = 12: D_3 = ±(1.5 + 6.32 × **3** / 20) = 2.448 ns.

This formula is applicable for K × **N** < 95. For longer periods the K × **N** = 95 value can be used. This steady value can be approximated by: D_{Nmax} [ns] = ±(1.5 + 600 / (K × f_{MC})).

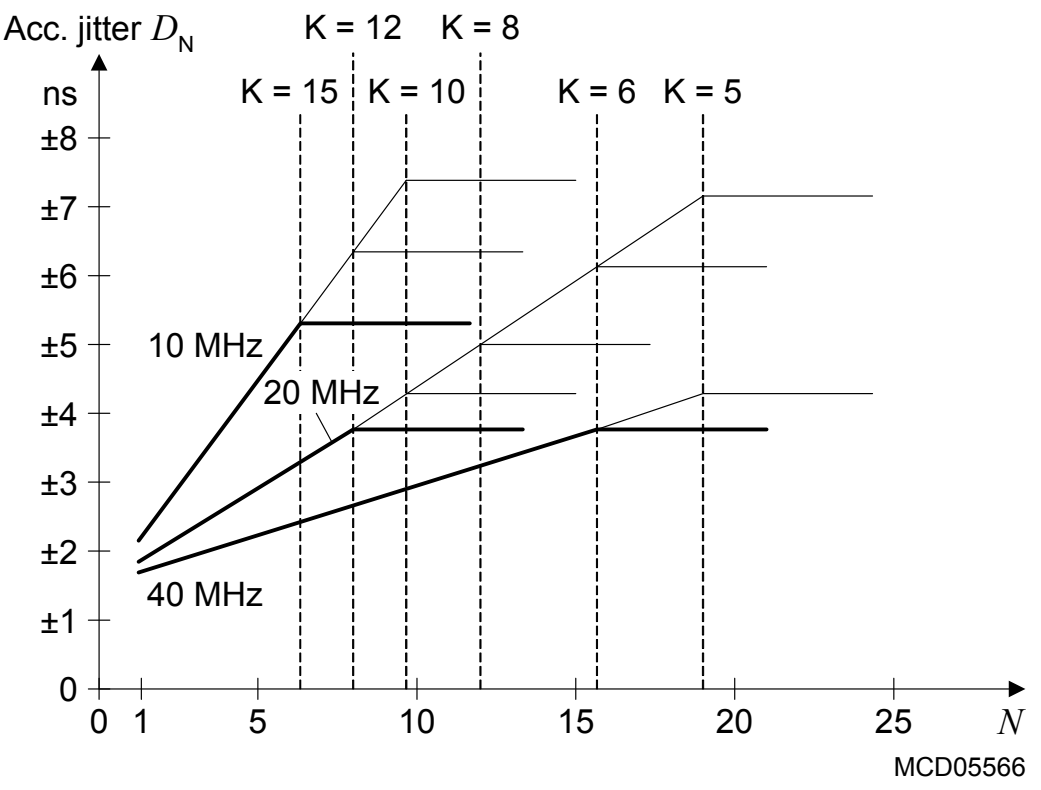

Figure 14 Approximated Accumulated PLL Jitter

Note: The bold lines indicate the minimum accumulated jitter which can be achieved by selecting the maximum possible output prescaler factor K.

Different frequency bands can be selected for the VCO, so the operation of the PLL can be adjusted to a wide range of input and output frequencies:

Table 14 VCO Bands for PLL Operation[1)]

PLLCON.PLLVB	VCO Frequency Range	Base Frequency Range
00	100 … 150 MHz	20 … 80 MHz
01	150 … 200 MHz	40 … 130 MHz
10	200 … 250 MHz	60 … 180 MHz
11	Reserved	

1) Not subject to production test - verified by design/characterization.

4.3.2 On-chip Flash Operation

The XC164N's Flash module delivers data within a fixed access time (see **Table 15**).

Accesses to the Flash module are controlled by the PMI and take 1 + WS clock cycles, where WS is the number of Flash access waitstates selected via bitfield WSFLASH in register IMBCTRL. The resulting duration of the access phase must cover the access time t_{ACC} of the Flash array. Therefore, the required Flash waitstates depend on the available speed grade as well as on the actual system frequency.

Note: The Flash access waitstates only affect non-sequential accesses. Due to prefetching mechanisms, the performance for sequential accesses (depending on the software structure) is only partially influenced by waitstates.
In typical applications, eliminating one waitstate increases the average performance by 5% … 15%.

Table 15 Flash Characteristics (Operating Conditions apply)

Parameter	Symbol		Limit Values			Unit
			Min.	Typ.	Max.	
Flash module access time (Standard)	t_{ACC}	CC	–	–	70[1]	ns
Programming time per 128-byte block	t_{PR}	CC	–	2[2]	5	ms
Erase time per sector	t_{ER}	CC	–	200[2]	500	ms

1) The actual access time is also influenced by the system frequency, so the frequency ranges are not fully linear. See **Table 16**.

2) Programming and erase time depends on the system frequency. Typical values are valid for 40 MHz.

Example: For an operating frequency of 40 MHz (clock cycle = 25 ns), Standard devices must be operated with 2 waitstates: ((2 + 1) × 25 ns) ≥ 70 ns.

Table 16 indicates the interrelation of waitstates, system frequency, and speed grade.

Table 16 Flash Access Waitstates

Required Waitstates	Frequency Range for Standard Flash Speed
0 WS (WSFLASH = 00_B)	$f_{CPU} \leq 16$ MHz
1 WS (WSFLASH = 01_B)	$f_{CPU} \leq 28$ MHz
2 WS (WSFLASH = 10_B)	$f_{CPU} \leq 40$ MHz

Note: The maximum achievable system frequency is limited by the properties of the respective derivative, i.e. 40 MHz (or 20 MHz for xxx-32F20F devices).

4.3.3 External Clock Drive XTAL1

Table 17 External Clock Drive Characteristics (Operating Conditions apply)

Parameter	Symbol		Limit Values		Unit
			Min.	Max.	
Oscillator period	t_{OSC}	SR	25	250[1)]	ns
High time[2)]	t_1	SR	6	–	ns
Low time[2)]	t_2	SR	6	–	ns
Rise time[2)]	t_3	SR	–	8	ns
Fall time[2)]	t_4	SR	–	8	ns

1) The maximum limit is only relevant for PLL operation to ensure the minimum input frequency for the PLL.

2) The clock input signal must reach the defined levels V_{ILC} and V_{IHC}.

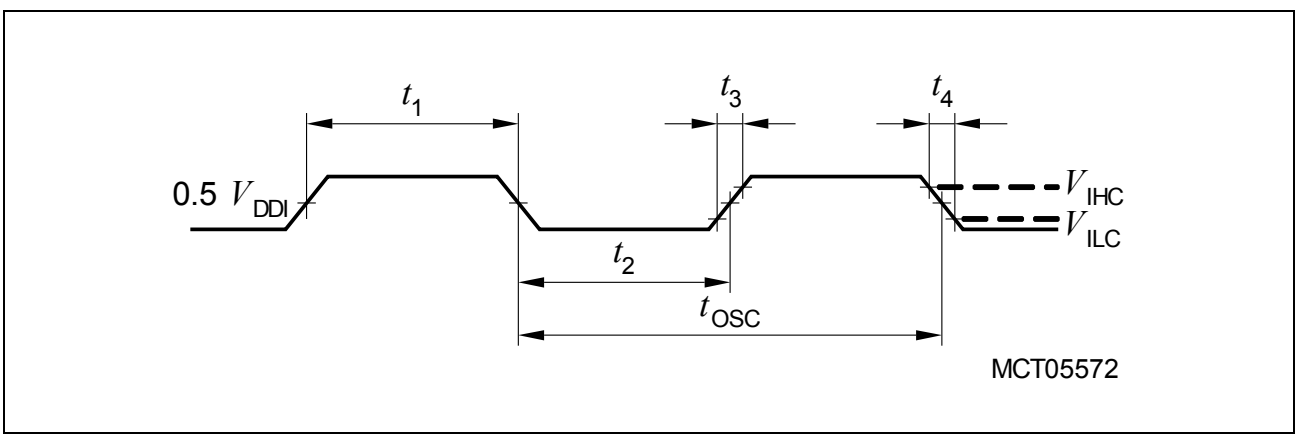

Figure 15 External Clock Drive XTAL1

Note: If the on-chip oscillator is used together with a crystal or a ceramic resonator, the oscillator frequency is limited to a range of 4 MHz to 16 MHz.
It is strongly recommended to measure the oscillation allowance (negative resistance) in the final target system (layout) to determine the optimum parameters for the oscillator operation. Please refer to the limits specified by the crystal supplier.
When driven by an external clock signal it will accept the specified frequency range. Operation at lower input frequencies is possible but is verified by design only (not subject to production test).

4.3.4 Testing Waveforms

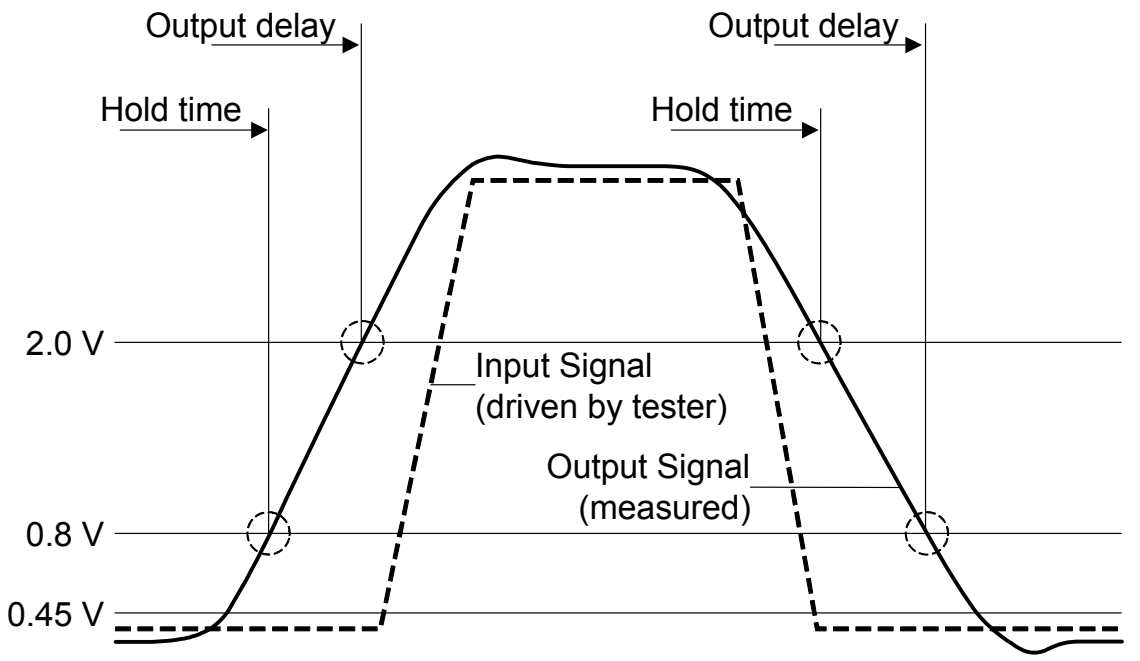

Output timings refer to the rising edge of CLKOUT.
Input timings are calculated from the time, when the input signal reaches V_{IH} or V_{IL}, respectively.

MCD05556

Figure 16 Input Output Waveforms

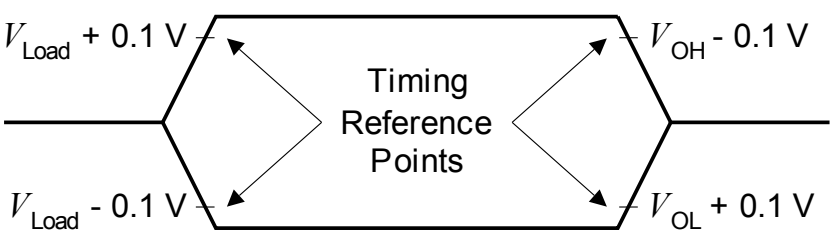

For timing purposes a port pin is no longer floating when a 100 mV change from load voltage occurs, but begins to float when a 100 mV change from the loaded V_{OH}/V_{OL} level occurs (I_{OH}/I_{OL} = 20 mA).

MCA05565

Figure 17 Float Waveforms

4.3.5 External Bus Timing

Table 18 CLKOUT Reference Signal

Parameter	Symbol		Limit Values		Unit
			Min.	Max.	
CLKOUT cycle time	tc_5	CC	40/30/25[1]		ns
CLKOUT high time	tc_6	CC	8	–	ns
CLKOUT low time	tc_7	CC	6	–	ns
CLKOUT rise time	tc_8	CC	–	4	ns
CLKOUT fall time	tc_9	CC	–	4	ns

1) The CLKOUT cycle time is influenced by the PLL jitter (given values apply to f_{CPU} = 25/33/40 MHz). For longer periods the relative deviation decreases (see PLL deviation formula).

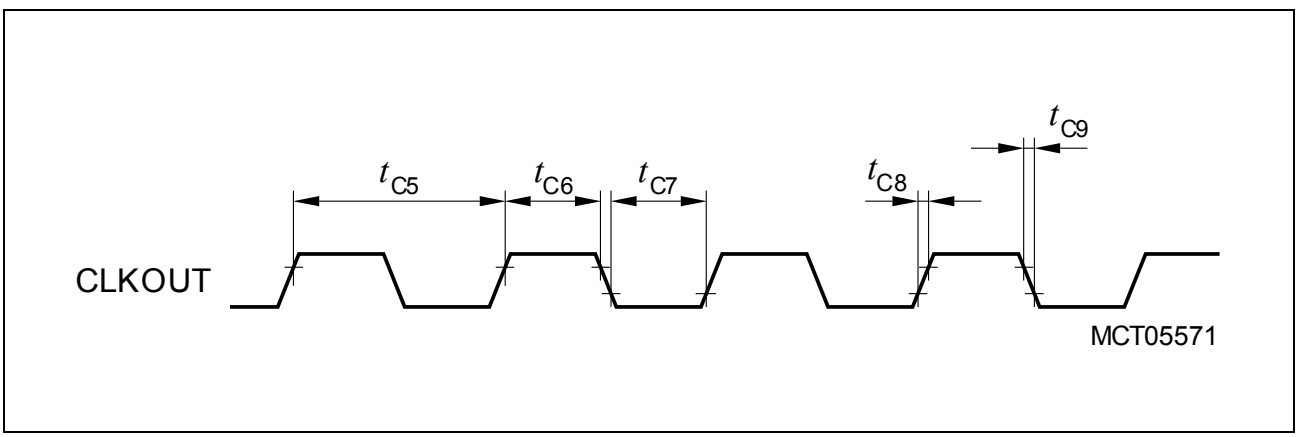

Figure 18 CLKOUT Signal Timing

Variable Memory Cycles

External bus cycles of the XC164N are executed in five subsequent cycle phases (AB, C, D, E, F). The duration of each cycle phase is programmable (via the TCONCSx registers) to adapt the external bus cycles to the respective external module (memory, peripheral, etc.).

This table provides a summary of the phases and the respective choices for their duration.

Table 19 Programmable Bus Cycle Phases (see timing diagrams)

Bus Cycle Phase	Parameter	Valid Values	Unit
Address setup phase, the standard duration of this phase (1 … 2 TCP) can be extended by 0 … 3 TCP if the address window is changed	tp_{AB}	1 … 2 (5)	TCP
Command delay phase	tp_{C}	0 … 3	TCP
Write Data setup/MUX Tristate phase	tp_{D}	0 … 1	TCP
Access phase	tp_{E}	1 … 32	TCP
Address/Write Data hold phase	tp_{F}	0 … 3	TCP

Note: The bandwidth of a parameter (minimum and maximum value) covers the whole operating range (temperature, voltage) as well as process variations. Within a given device, however, this bandwidth is smaller than the specified range. This is also due to interdependencies between certain parameters. Some of these interdependencies are described in additional notes (see standard timing).

Table 20 External Bus Cycle Timing (Operating Conditions apply)

Parameter	Symbol		Limit Values		Unit
			Min.	Max.	
Output valid delay for: RD, WR(L/H)	tc_{10}	CC	1	15	ns
Output valid delay for: BHE, ALE	tc_{11}	CC	-1	8	ns
Output valid delay for: A23 … A16, A15 … A0 (on PORT1)	tc_{12}	CC	3	18	ns
Output valid delay for: A15 … A0 (on PORT0)	tc_{13}	CC	3	18	ns
Output valid delay for: CS	tc_{14}	CC	3	16	ns
Output valid delay for: D15 … D0 (write data, MUX-mode)	tc_{15}	CC	3	19	ns
Output valid delay for: D15 … D0 (write data, DEMUX-mode)	tc_{16}	CC	2	16	ns
Output hold time for: RD, WR(L/H)	tc_{20}	CC	-3	4	ns
Output hold time for: BHE, ALE	tc_{21}	CC	0	11	ns
Output hold time for: A23 … A16, A15 … A0 (on PORT0)	tc_{23}	CC	1	13	ns
Output hold time for: CS	tc_{24}	CC	-2	4	ns
Output hold time for: D15 … D0 (write data)	tc_{25}	CC	1	13	ns
Input setup time for: D15 … D0 (read data)	tc_{30}	SR	29	–	ns
Input hold time D15 … D0 (read data)[1)]	tc_{31}	SR	-5	–	ns

1) Read data are latched with the same (internal) clock edge that triggers the address change and the rising edge of RD. Therefore address changes before the end of RD have no impact on (demultiplexed) read cycles. Read data can be removed after the rising edge of RD.

Note: The shaded parameters have been verified by characterization. They are not subject to production test.

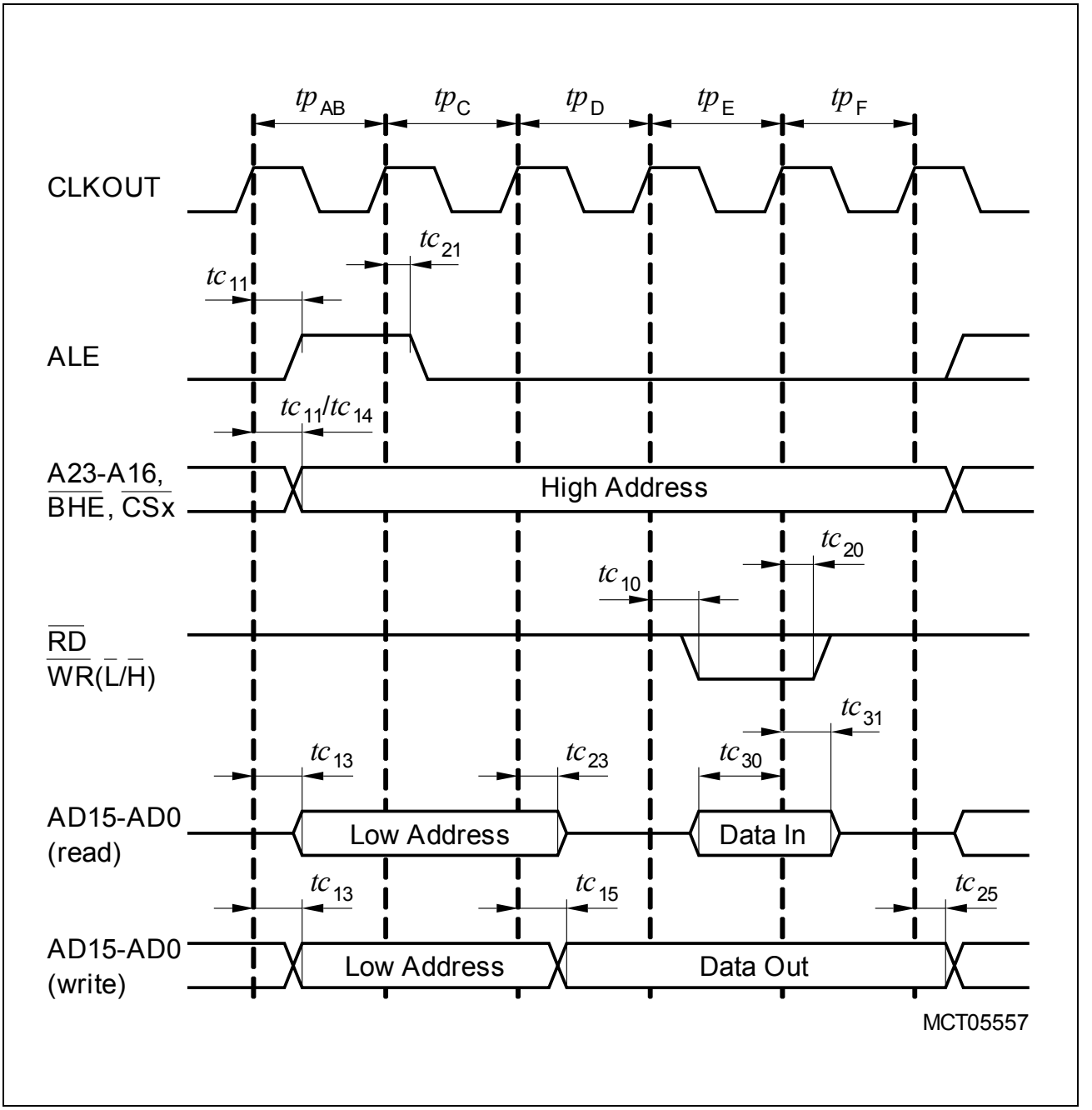

Figure 19 Multiplexed Bus Cycle

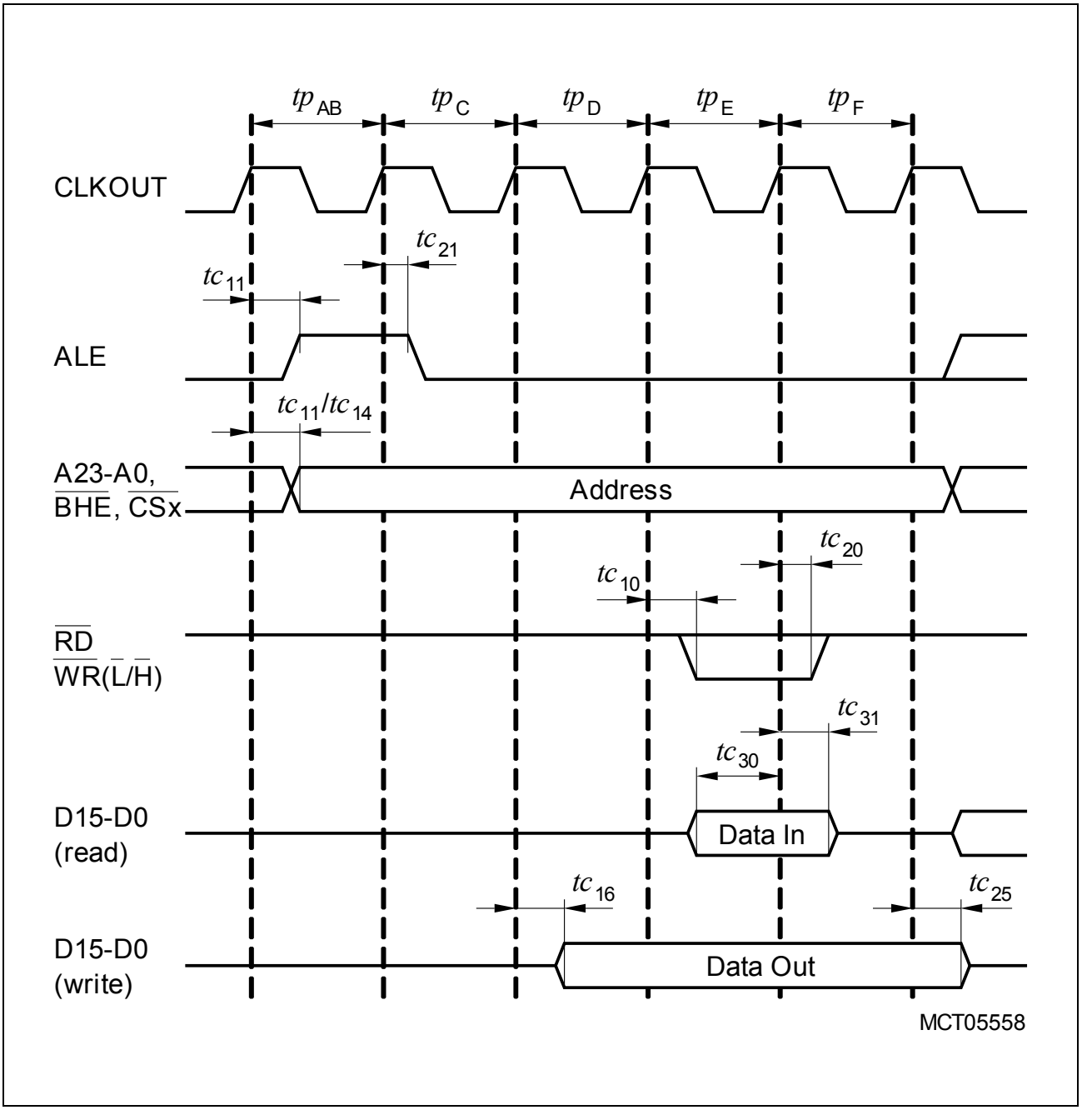

Figure 20 Demultiplexed Bus Cycle

5 Package and Reliability

5.1 Packaging

Table 21 Package Parameters

Parameter	Symbol	Limit Values		Unit	Notes
		Min.	Max.		
Green Package PG-TQFP-100-5					
Thermal resistance junction to case	$R_{\Theta JC}$	–	8	K/W	–
Thermal resistance junction to leads	$R_{\Theta JL}$	–	31	K/W	–
Standard Package P-TQFP-100-16					
Thermal resistance junction to case	$R_{\Theta JC}$	–	7	K/W	–
Thermal resistance junction to leads	$R_{\Theta JL}$	–	23	K/W	–

Package Outlines

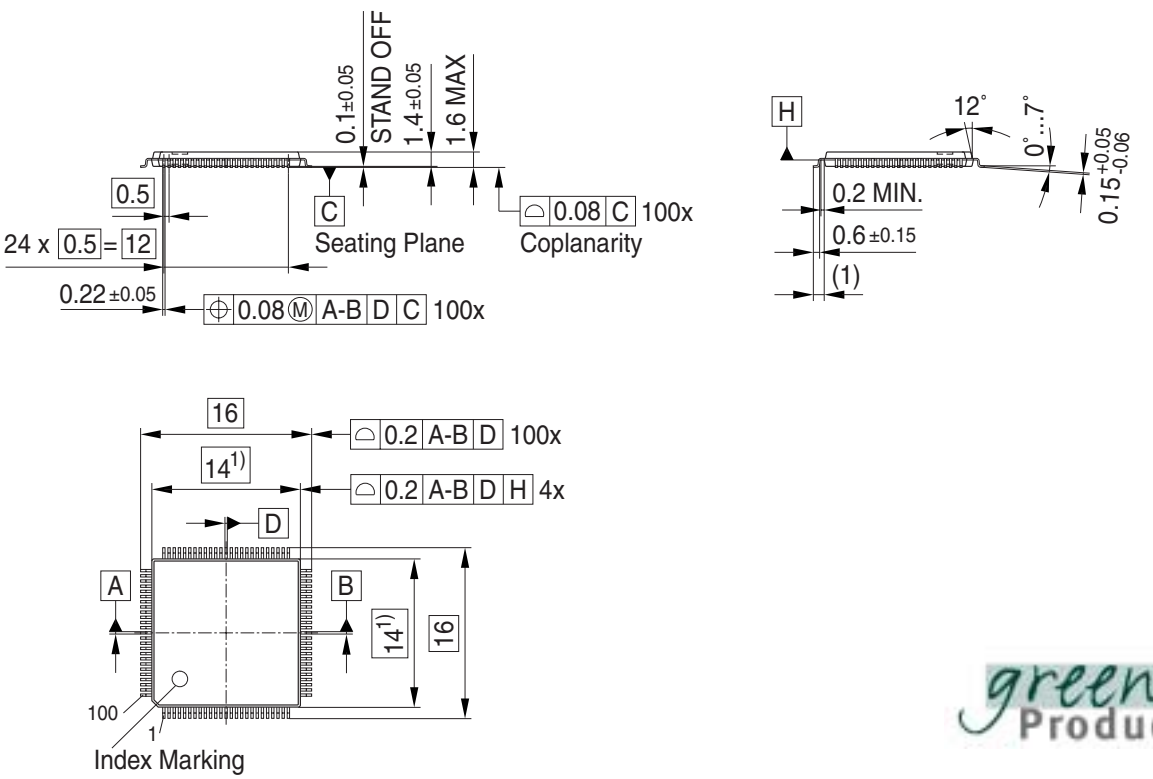

Figure 21 PG-TQFP-100-5 (Plastic Green Thin Quad Flat Package)

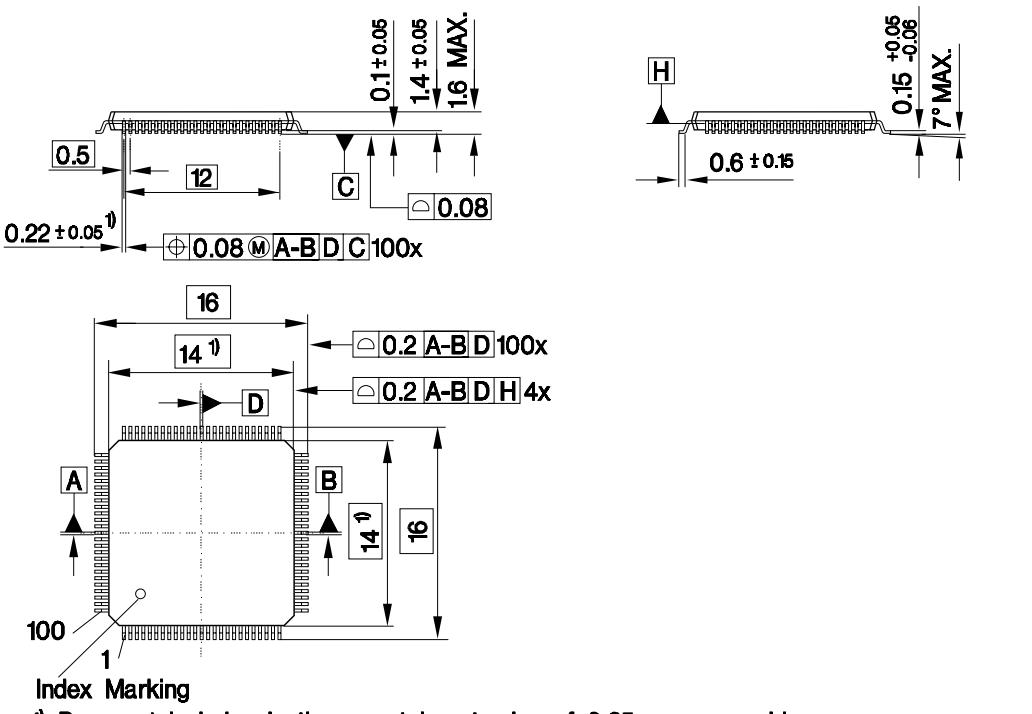

Figure 22 P-TQFP-100-16 (Plastic Thin Quad Flat Package)

You can find all of our packages, sorts of packing and others in our Infineon Internet Page “Products”: **http://www.infineon.com/products**. Dimensions in mm

5.2 Flash Memory Parameters

The data retention time of the XC164N's Flash memory (i.e. the time after which stored data can still be retrieved) depends on the number of times the Flash memory has been erased and programmed.

Table 22 Flash Parameters (XC164N, 256 Kbytes)

Parameter	Symbol	Limit Values		Unit	Notes
		Min.	Max.		
Data retention time	t_{RET}	15	–	years	10^3 erase/program cycles
Flash Erase Endurance	N_{ER}	20×10^3	–	cycles	data retention time 5 years

w w w . i n f i n e o n . c o m

Published by Infineon Technologies AG