5V, Byte Alterable EEPROM

The X28HC256 is a second generation high performance CMOS 32k x 8 EEPROM. It is fabricated with Intersil's proprietary, textured poly floating gate technology, providing a highly reliable 5V only nonvolatile memory.

The X28HC256 supports a 128-byte page write operation, effectively providing a 24µs/byte write cycle, and enabling the entire memory to be typically rewritten in less than 0.8 seconds. The X28HC256 also features $\overline{\text{DATA}}$ Polling and Toggle Bit Polling, two methods of providing early end of write detection. The X28HC256 also supports the JEDEC standard Software Data Protection feature for protecting against inadvertent writes during power-up and power-down.

Endurance for the X28HC256 is specified as a minimum 1,000,000 write cycles per byte and an inherent data retention of 100 years.

Features

- Access time: 70ns
- Simple byte and page write
  - Single 5V supply
  - No external high voltages or V_{P-P} control circuits
  - Self-timed
  - No erase before write
  - No complex programming algorithms
  - No overerase problem
- Low power CMOS
  - Active: 60mA
  - Standby: 500µA
- Software data protection
  - Protects data against system level inadvertent writes
- High speed page write capability
- Highly reliable Direct Write™ cell
  - Endurance: 1,000,000 cycles
  - Data retention: 100 years
- Early end of write detection
  - DATA polling
  - Toggle bit polling
- Pb-free plus anneal available (RoHS compliant)

Block Diagram

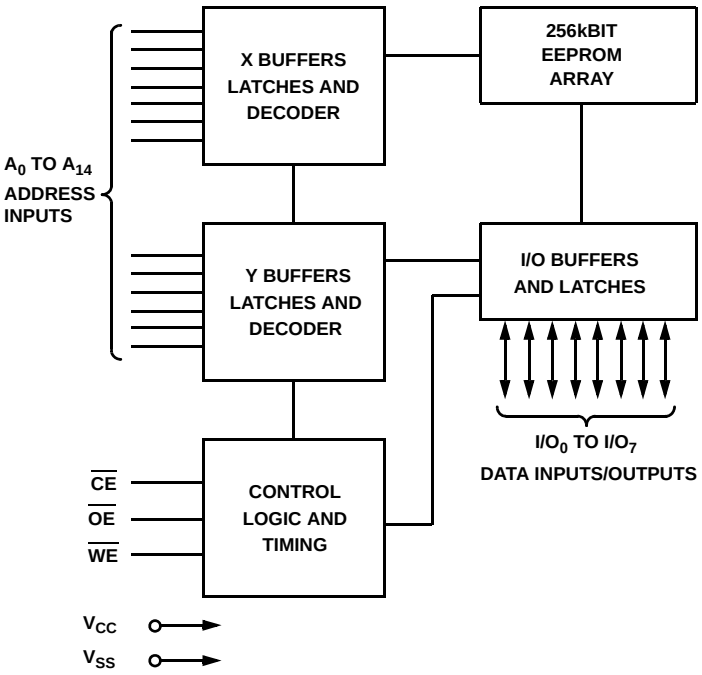

CAUTION: These devices are sensitive to electrostatic discharge; follow proper IC Handling Procedures.
1-888-INTERSIL or 1-888-468-3774 | Intersil (and design) is a registered trademark of Intersil Americas Inc.
Copyright Intersil Americas Inc. 2005, 2006, 2007. All Rights Reserved
All other trademarks mentioned are the property of their respective owners.

Ordering Information

PART NUMBER	PART MARKING	ACCESS TIME (ns)	TEMP. RANGE (°C)	PACKAGE	PKG. DWG. #
X28HC256DI-15	X28HC256DI-15 RR	150	-40 to +85	28 Ld CERDIP	F28.6
X28HC256DM-15	X28HC256DM-15 RR		-55 to +125	28 Ld CERDIP	F28.6
X28HC256DMB-15	C X28HC256DMB-15		MIL-STD-883	28 Ld CERDIP	F28.6
X28HC256EMB-15	C X28HC256EMB-15		MIL-STD-883	32 Ld LCC (458 mils)	
X28HC256FMB-15	C X28HC256FMB-15		MIL-STD-883	28 Ld FLATPACK (440 mils)	
X28HC256J-15*, **	X28HC256J-15 RR		0 to +70	32 Ld PLCC	N32.45x55
X28HC256JZ-15* (Note)	X28HC256J-15 ZRR		0 to +70	32 Ld PLCC (Pb-free)	N32.45x55
X28HC256JI-15*, **	X28HC256JI-15 RR		-40 to +85	32 Ld PLCC	N32.45x55
X28HC256JIZ-15* (Note)	X28HC256JI-15 ZRR		-40 to +85	32 Ld PLCC (Pb-free)	N32.45x55
X28HC256JM-15*	X28HC256JM-15 RR		-55 to +125	32 Ld PLCC	N32.45x55
X28HC256KI-15	X28HC256KI-15 RR		-40 to +85	28 Ld PGA	G28.550x650A
X28HC256KM-15	X28HC256KM-15 RR		-55 to +125	28 Ld PGA	G28.550x650A
X28HC256KMB-15	C X28HC256KMB-15		MIL-STD-883	28 Ld PGA	G28.550x650A
X28HC256P-15	X28HC256P-15 RR		0 to +70	28 Ld PDIP	E28.6
X28HC256PZ-15 (Note)	X28HC256P-15 RRZ		0 to +70	28 Ld PDIP (Pb-free)***	E28.6
X28HC256PI-15	X28HC256PI-15 RR		-40 to +85	28 Ld PDIP	E28.6
X28HC256PIZ-15 (Note)	X28HC256PI-15 RRZ		-40 to +85	28 Ld PDIP (Pb-free)***	E28.6
X28HC256PM-15	X28HC256PM-15 RR		-55 to +125	28 Ld PDIP	E28.6
X28HC256SI-15*	X28HC256SI-15 RR		-40 to +85	28 Ld SOIC (300 mil)	MDP0027
X28HC256SIZ-15* (Note)	X28HC256SI-15 RRZ		-40 to +85	28 Ld SOIC (300 mil) (Pb-free)	MDP0027
X28HC256SM-15	X28HC256SM-15 RR		-55 to +125	28 Ld SOIC (300 mil)	MDP0027
X28HC256D-12	X28HC256D-12 RR	120	0 to +70	28 Ld CERDIP (520 mils)	F28.6
X28HC256DI-12	X28HC256DI-12 RR		-40 to +85	28 Ld CERDIP (520 mils)	F28.6
X28HC256DM-12	X28HC256DM-12 RR		-55 to +125	28 Ld CERDIP (520 mils)	F28.6
X28HC256DMB-12	C X28HC256DMB-12		MIL-STD-883	28 Ld CERDIP (520 mils)	F28.6
X28HC256EI-12	X28HC256EI-12 RR		-40 to +85	32 Ld LCC (458 mils)	
X28HC256EM-12	X28HC256EM-12 RR		-55 to +125	32 Ld LCC (458 mils)	
X28HC256EMB-12	C X28HC256EMB-12		MIL-STD-883	32 Ld LCC (458 mils)	
X28HC256FMB-12	C X28HC256FMB-12		MIL-STD-883	28 Ld FLATPACK (440 mils)	
X28HC256J-12*	X28HC256J-12 RR		0 to +70	32 Ld PLCC	N32.45x55
X28HC256JZ-12* (Note)	X28HC256J-12 ZRR		0 to +70	32 Ld PLCC (Pb-free)	N32.45x55
X28HC256JI-12*	X28HC256JI-12 RR		-40 to +85	32 Ld PLCC	N32.45x55
X28HC256JIZ-12* (Note)	X28HC256JI-12 ZRR		-40 to +85	32 Ld PLCC (Pb-free)	N32.45x55
X28HC256KI-12	X28HC256KI-12 RR		-40 to +85	28 Ld PGA	G28.550x650A
X28HC256KM-12	X28HC256KM-12 RR		-55 to +125	28 Ld PGA	G28.550x650A
X28HC256KMB-12	C X28HC256KMB-12		MIL-STD-883	28 Ld PGA	G28.550x650A
X28HC256P-12	X28HC256P-12 RR		0 to +70	28 Ld PDIP	E28.6
X28HC256PZ-12 (Note)	X28HC256P-12 RRZ		0 to +70	28 Ld PDIP (Pb-free)***	E28.6
X28HC256PI-12	X28HC256PI-12 RR		-40 to +85	28 Ld PDIP	E28.6

Ordering Information (Continued)

PART NUMBER	PART MARKING	ACCESS TIME (ns)	TEMP. RANGE (°C)	PACKAGE	PKG. DWG. #
X28HC256PIZ-12 (Note)	X28HC256PI-12 RRZ		-40 to +85	28 Ld PDIP (Pb-free)***	E28.6
X28HC256S-12*	X28HC256S-12 RR	120	0 to +70	28 Ld SOIC (300 mils)	MDP0027
X28HC256SZ-12 (Note)	X28HC256S-12 RRZ		0 to +70	28 Ld SOIC (300 mils) (Pb-free)	MDP0027
X28HC256SI-12*	X28HC256SI-12 RR		-40 to +85	28 Ld SOIC (300 mils)	MDP0027
X28HC256SIZ-12 (Note)	X28HC256SI-12 RRZ		-40 to +85	28 Ld SOIC (300 mils) (Pb-free)	MDP0027
X28HC256SM-12*, **	X28HC256SM-12 RR		-55 to +125	28 Ld SOIC (300 mils)	MDP0027
X28HC256D-90	X28HC256D-90 RR	90	0 to +70	28 Ld CERDIP (520 mils)	F28.6
X28HC256DI-90	X28HC256DI-90 RR		-40 to +85	28 Ld CERDIP (520 mils)	F28.6
X28HC256DM-90	X28HC256DM-90 RR		-55 to +125	28 Ld CERDIP (520 mils)	F28.6
X28HC256DMB-90	C X28HC256DMB-90		MIL-STD-883	28 Ld CERDIP (520 mils)	F28.6
X28HC256EM-90	X28HC256EM-90 RR		-55 to +125	32 Ld LCC (458 mils)	
X28HC256EMB-90	C X28HC256EMB-90		MIL-STD-883	32 Ld LCC (458 mils)	
X28HC256FI-90	X28HC256FI-90 RR		-40 to +85	28 Ld FLATPACK (440 mils)	
X28HC256FM-90	X28HC256FM-90 RR		-55 to +125	28 Ld FLATPACK (440 mils)	
X28HC256FMB-90	C X28HC256FMB-90		MIL-STD-883	28 Ld FLATPACK (440 mils)	
X28HC256J-90*	X28HC256J-90 RR		0 to +70	32 Ld PLCC	N32.45x55
X28HC256JZ-90* (Note)	X28HC256J-90 ZRR		0 to +70	32 Ld PLCC (Pb-free)	N32.45x55
X28HC256JI-90*	X28HC256JI-90 RR		-40 to +85	32 Ld PLCC	N32.45x55
X28HC256JIZ-90* (Note)	X28HC256JI-90 ZRR		-40 to +85	32 Ld PLCC (Pb-free)	N32.45x55
X28HC256JM-90*	X28HC256JM-90 RR		-55 to +125	32 Ld PLCC	N32.45x55
X28HC256KM-90	X28HC256KM-90 RR		-55 to +125	28 Ld PGA	G28.550x650A
X28HC256KMB-90	C X28HC256KMB-90		MIL-STD-883	28 Ld PGA	G28.550x650A
X28HC256P-90	X28HC256P-90 RR	90	0 to +70	28 Ld PDIP	E28.6
X28HC256PZ-90 (Note)	X28HC256P-90 RRZ		0 to +70	28 Ld PDIP (Pb-free)***	E28.6
X28HC256PI-90	X28HC256PI-90 RR		-40 to +85	28 Ld PDIP	E28.6
X28HC256PIZ-90 (Note)	X28HC256PI-90 RRZ		-40 to +85	28 Ld PDIP (Pb-free)**	E28.6
X28HC256S-90*	X28HC256S-90 RR		0 to +70	28 Ld SOIC (300 mils)	MDP0027
X28HC256SI-90*	X28HC256SI-90 RR		-40 to +85	28 Ld SOIC (300 mils)	MDP0027
X28HC256SIZ-90 (Note)	X28HC256SI-90 RRZ		-40 to +85	28 Ld SOIC (300 mils) (Pb-free)	MDP0027
X28HC256SI-20T1		200	-40 to +85	28 Ld SOIC (300 mils) Tape and Reel	MDP0027

*Add "T1" suffix for tape and reel.

**Add "T2" suffix for tape and reel.

***Pb-free PDIPs can be used for through hole wave solder processing only. They are not intended for use in Reflow solder processing applications.

NOTE: Intersil Pb-free plus anneal products employ special Pb-free material sets; molding compounds/die attach materials and 100% matte tin plate termination finish, which are RoHS compliant and compatible with both SnPb and Pb-free soldering operations. Intersil Pb-free products are MSL classified at Pb-free peak reflow temperatures that meet or exceed the Pb-free requirements of IPC/JEDEC J STD-020.

Pinouts

X28HC256
(28 LD CERDIP, FLATPACK, PDIP, SOIC)
TOP VIEW

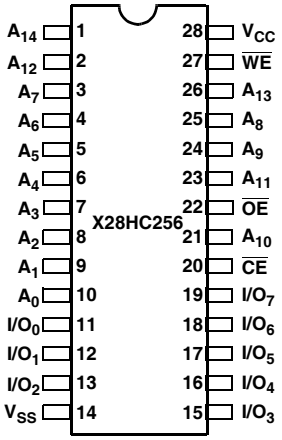

X28HC256
(32 LD PLCC, LCC)
TOP VIEW

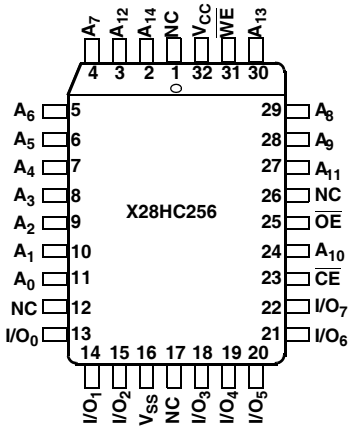

X28HC256
(28 LD PGA)
BOTTOM VIEW

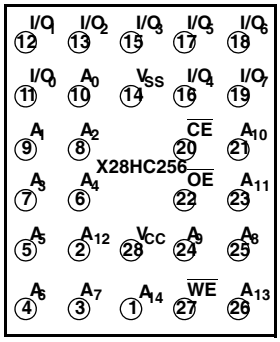

Pin Descriptions

Addresses (A_0 to A_{14})

The Address inputs select an 8-bit memory location during a read or write operation.

Chip Enable ($\overline{CE}$)

The Chip Enable input must be LOW to enable all read/write operations. When $\overline{CE}$ is HIGH, power consumption is reduced.

Output Enable ($\overline{OE}$)

The Output Enable input controls the data output buffers, and is used to initiate read operations.

Data In/Data Out (I/O_0 to I/O_7)

Data is written to or read from the X28HC256 through the I/O pins.

Write Enable ($\overline{WE}$)

The Write Enable input controls the writing of data to the X28HC256.

Pin Names

SYMBOL	DESCRIPTION
A_0 to A_{14}	Address Inputs
I/O_0 to I/O_7	Data Input/Output
$\overline{WE}$	Write Enable
$\overline{CE}$	Chip Enable
$\overline{OE}$	Output Enable
V_{CC}	+5V
V_{SS}	Ground
NC	No Connect

Device Operation

Read

Read operations are initiated by both $\overline{OE}$ and $\overline{CE}$ LOW. The read operation is terminated by either $\overline{CE}$ or $\overline{OE}$ returning HIGH. This two line control architecture eliminates bus contention in a system environment. The data bus will be in a high impedance state when either $\overline{OE}$ or $\overline{CE}$ is HIGH.

Write

Write operations are initiated when both $\overline{CE}$ and $\overline{WE}$ are LOW and $\overline{OE}$ is HIGH. The X28HC256 supports both a $\overline{CE}$ and $\overline{WE}$ controlled write cycle. That is, the address is latched by the falling edge of either $\overline{CE}$ or $\overline{WE}$, whichever occurs last. Similarly, the data is latched internally by the rising edge of either $\overline{CE}$ or $\overline{WE}$, whichever occurs first. A byte write operation, once initiated, will automatically continue to completion, typically within 3ms.

Page Write Operation

The page write feature of the X28HC256 allows the entire memory to be written in typically 0.8 seconds. Page write allows up to one hundred twenty-eight bytes of data to be consecutively written to the X28HC256, prior to the commencement of the internal programming cycle. The host can fetch data from another device within the system during a page write operation (change the source address), but the page address (A_7 through A_{14}) for each subsequent valid write cycle to the part during this operation must be the same as the initial page address.

The page write mode can be initiated during any write operation. Following the initial byte write cycle, the host can write an additional one to one hundred twenty-seven bytes in the same manner as the first byte was written. Each successive byte load cycle, started by the $\overline{WE}$ HIGH to LOW transition, must begin within 100µs of the falling edge of the preceding $\overline{WE}$. If a subsequent $\overline{WE}$ HIGH to LOW transition is not detected within 100µs, the internal automatic programming cycle will commence. There is no page write window limitation. Effectively the page write window is infinitely wide, so long as the host continues to access the device within the byte load cycle time of 100µs.

Write Operation Status Bits

The X28HC256 provides the user two write operation status bits. These can be used to optimize a system write cycle time. The status bits are mapped onto the I/O bus as shown in Figure 1.

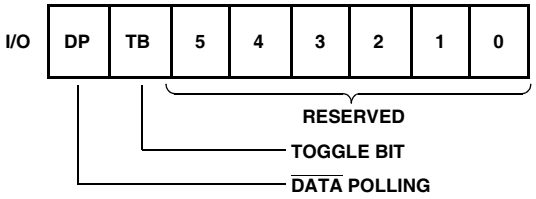

FIGURE 1. STATUS BIT ASSIGNMENT

$\overline{DATA}$ Polling (I/O_7)

The X28HC256 features $\overline{DATA}$ Polling as a method to indicate to the host system that the byte write or page write cycle has completed. $\overline{DATA}$ Polling allows a simple bit test operation to determine the status of the X28HC256. This eliminates additional interrupt inputs or external hardware. During the internal programming cycle, any attempt to read the last byte written will produce the complement of that data on I/O_7 (i.e., write data = 0xxx xxxx, read data = 1xxx xxxx). Once the programming cycle is complete, I/O_7 will reflect true data.

Toggle Bit (I/O_6)

The X28HC256 also provides another method for determining when the internal write cycle is complete. During the internal programming cycle I/O_6 will toggle from HIGH to LOW and LOW to HIGH on subsequent attempts to read the device. When the internal cycle is complete the toggling will cease, and the device will be accessible for additional read and write operations.

$\overline{DATA}$ Polling I/O_7

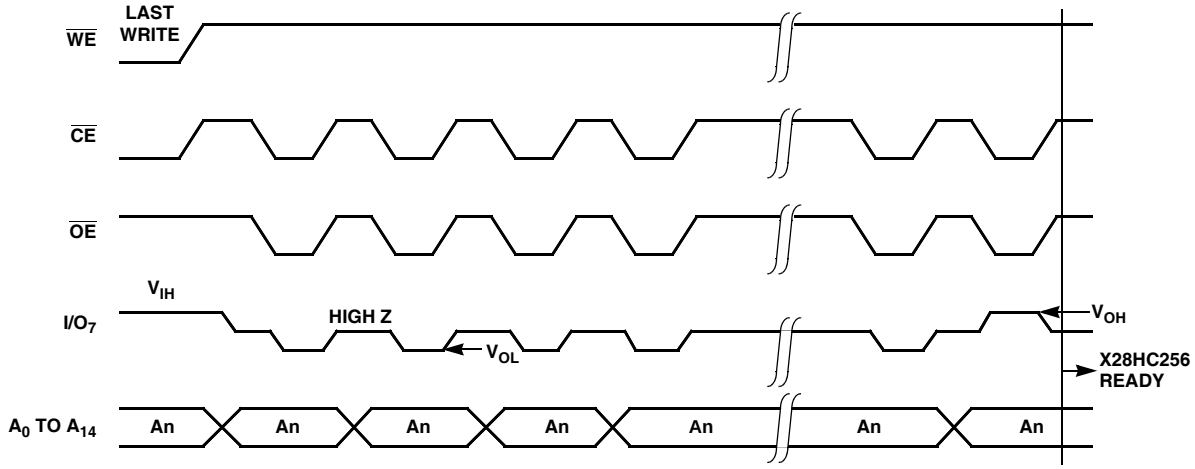

FIGURE 2. $\overline{DATA}$ POLLING BUS SEQUENCE

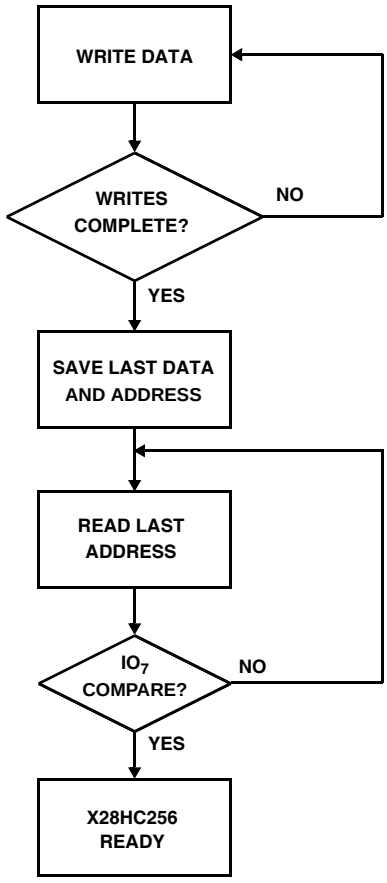

FIGURE 3. $\overline{DATA}$ POLLING SOFTWARE FLOW

$\overline{DATA}$ Polling can effectively halve the time for writing to the X28HC256. The timing diagram in Figure 2 illustrates the sequence of events on the bus. The software flow diagram in Figure 3 illustrates one method of implementing the routine.

The Toggle Bit I/O_6

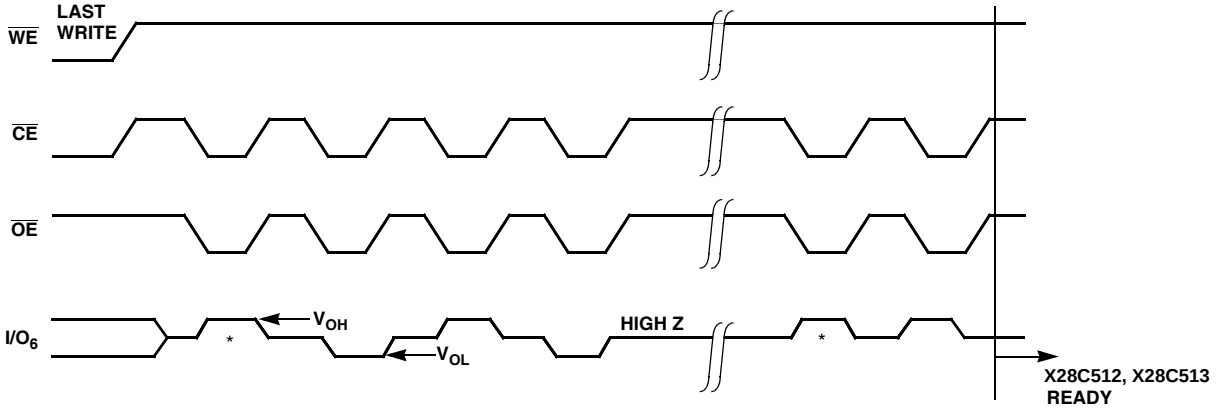

* I/O_6 Beginning and ending state of I/O_6 will vary.

FIGURE 4. TOGGLE BIT BUS SEQUENCE

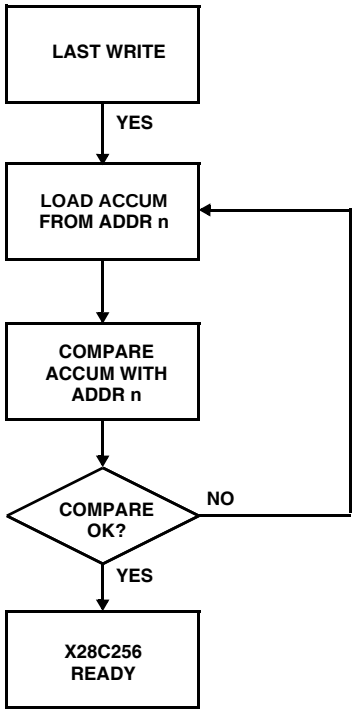

FIGURE 5. TOGGLE BIT SOFTWARE FLOW

The Toggle Bit can eliminate the chore of saving and fetching the last address and data in order to implement $\overline{DATA}$ Polling. This can be especially helpful in an array comprised of multiple X28HC256 memories that is frequently updated. The timing diagram in Figure 4 illustrates the sequence of events on the bus. The software flow diagram in Figure 5 illustrates a method for polling the Toggle Bit.

Hardware Data Protection

The X28HC256 provides two hardware features that protect nonvolatile data from inadvertent writes.

- Default V_{CC} Sense—All write functions are inhibited when V_{CC} is 3.5V typically.
- Write Inhibit—Holding either $\overline{OE}$ LOW, $\overline{WE}$ HIGH, or $\overline{CE}$ HIGH will prevent an inadvertent write cycle during power-up and power-down, maintaining data integrity.

Software Data Protection

The X28HC256 offers a software-controlled data protection feature. The X28HC256 is shipped from Intersil with the software data protection NOT ENABLED; that is, the device will be in the standard operating mode. In this mode data should be protected during power-up/down operations through the use of external circuits. The host would then have open read and write access of the device once V_{CC} was stable.

The X28HC256 can be automatically protected during power-up and power-down (without the need for external circuits) by employing the software data protection feature. The internal software data protection circuit is enabled after the first write operation, utilizing the software algorithm. This circuit is nonvolatile, and will remain set for the life of the device unless the reset command is issued.

Once the software protection is enabled, the X28HC256 is also protected from inadvertent and accidental writes in the powered-up state. That is, the software algorithm must be issued prior to writing additional data to the device.

Software Algorithm

Selecting the software data protection mode requires the host system to precede data write operations by a series of three write operations to three specific addresses. Refer to Figure 6 and 7 for the sequence. The three-byte sequence opens the page write window, enabling the host to write from one to one hundred twenty-eight bytes of data. Once the page load cycle has been completed, the device will automatically be returned to the data protected state.

Software Data Protection

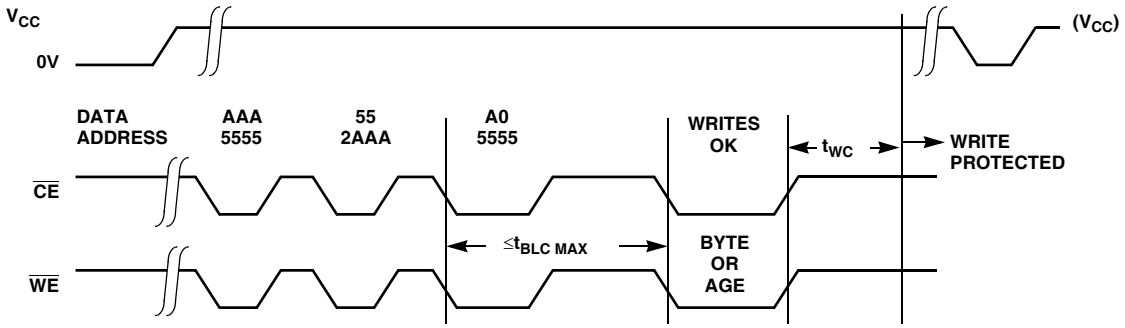

FIGURE 6. TIMING SEQUENCE—BYTE OR PAGE WRITE

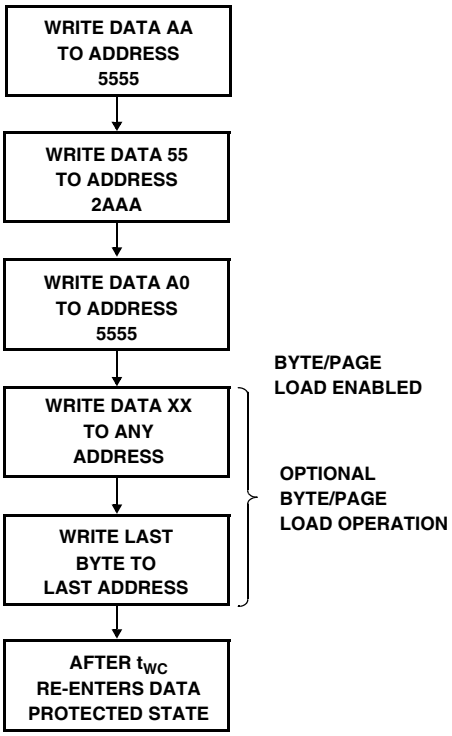

FIGURE 7. WRITE SEQUENCE FOR SOFTWARE DATA

Regardless of whether the device has previously been protected or not, once the software data protection algorithm is used and data has been written, the X28HC256 will automatically disable further writes unless another command is issued to cancel it. If no further commands are issued the X28HC256 will be write protected during power-down and after any subsequent power-up.

Note: Once initiated, the sequence of write operations should not be interrupted.

Resetting Software Data Protection

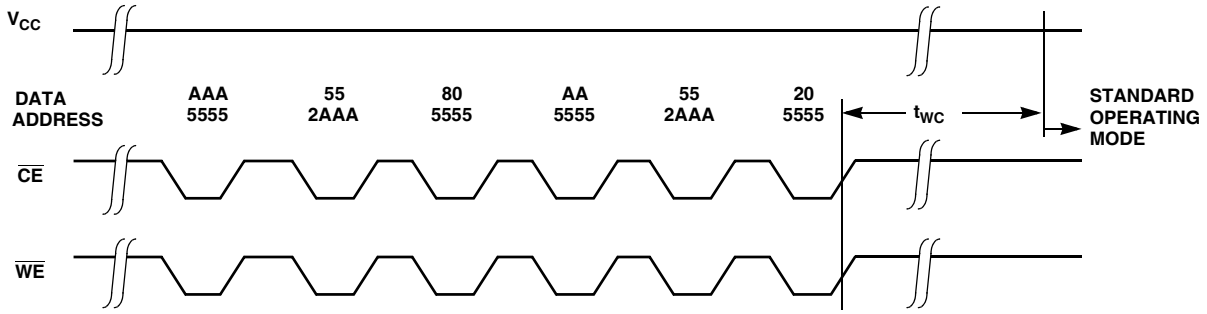

FIGURE 8. RESET SOFTWARE DATA PROTECTION TIMING SEQUENCE

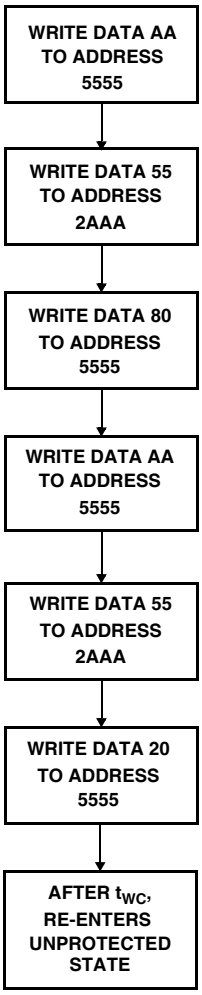

FIGURE 9. WRITE SEQUENCE FOR RESETTING SOFTWARE

In the event the user wants to deactivate the software data protection feature for testing or reprogramming in an EEPROM programmer, the following six step algorithm will reset the internal protection circuit. After t_{WC}, the X28HC256 will be in standard operating mode.

Note: Once initiated, the sequence of write operations should not be interrupted.

SYSTEM CONSIDERATIONS

Because the X28HC256 is frequently used in large memory arrays, it is provided with a two line control architecture for both read and write operations. Proper usage can provide the lowest possible power dissipation, and eliminate the possibility of contention where multiple I/O pins share the same bus.

To gain the most benefit, it is recommended that $\overline{CE}$ be decoded from the address bus and be used as the primary device selection input. Both $\overline{OE}$ and $\overline{WE}$ would then be common among all devices in the array. For a read operation, this assures that all deselected devices are in their standby mode, and that only the selected device(s) is/are outputting data on the bus.

Because the X28HC256 has two power modes, standby and active, proper decoupling of the memory array is of prime concern. Enabling $\overline{CE}$ will cause transient current spikes. The magnitude of these spikes is dependent on the output capacitive loading of the I/Os. Therefore, the larger the array sharing a common bus, the larger the transient spikes. The voltage peaks associated with the current transients can be suppressed by the proper selection and placement of decoupling capacitors. As a minimum, it is recommended that a 0.1µF high frequency ceramic capacitor be used between V_{CC} and V_{SS} at each device. Depending on the size of the array, the value of the capacitor may have to be larger.

In addition, it is recommended that a 4.7µF electrolytic bulk capacitor be placed between V_{CC} and V_{SS} for each eight devices employed in the array. This bulk capacitor is employed to overcome the voltage droop caused by the inductive effects of the PC board traces.

Absolute Maximum Ratings

Temperature Under Bias . . . . . .-10°C to +85°C
X28HC256 . . . . . .-65°C to +135°C
X28HC256I, X28HC256M . . . . . .-65°C to +150°C
Voltage on any Pin with Respect to V_{SS} . . . . . -1V to +7V
DC Output Current 10mA

Operating Conditions

Temperature Range . . . . . .
Commerical . . . . . 0°C to +70°C
Industrial. . . . . .-40°C to +85°C
Military . . . . . .-55°C to +125°C
Supply Voltage . . . . . 5V ± 10%

Thermal Information

Storage Temperature . . . . . .-65°C to +150°C
Pb-free reflow profile . . . . . .see link below
http://www.intersil.com/pbfree/Pb-FreeReflow.asp
*Pb-free PDIPs can be used for through hole wave solder processing only. They are not intended for use in Reflow solder processing applications.

CAUTION: Stresses above those listed in "Absolute Maximum Ratings" may cause permanent damage to the device. This is a stress only rating and operation of the device at these or any other conditions above those indicated in the operational sections of this specification is not implied.

DC Electrical Specifications Over Recommended Operating Conditions, Unless Otherwise Specified.

PARAMETER	SYMBOL	TEST CONDITIONS	LIMITS			UNIT
			MIN	TYP (Note 7)	MAX	
V_{CC} Active Current (TTL Inputs)	I_{CC}	$\overline{CE}$ = $\overline{OE}$ = V_{IL}, $\overline{WE}$ = V_{IH}, All I/O's = open, address inputs = .4V/2.4V levels @ f = 10MHz		30	60	mA
V_{CC} Standby Current (TTL Inputs)	I_{SB1}	$\overline{CE}$ = V_{IH}, $\overline{OE}$ = V_{IL}, All I/O's = open, other inputs = V_{IH}		1	2	mA
V_{CC} Standby Current (CMOS Inputs)	I_{SB2}	$\overline{CE}$ = V_{CC} - 0.3V, $\overline{OE}$ = GND, All I/Os = open, other inputs = V_{CC} - 0.3V		200	500	µA
Input Leakage Current	I_{LI}	V_{IN} = V_{SS} to V_{CC}			10	µA
Output Leakage Current	I_{LO}	V_{OUT} = V_{SS} to V_{CC}, $\overline{CE}$ = V_{IH}			10	µA
Input LOW Voltage	V_{IL} (Note 2)		-1		0.8	V
Input HIGH Voltage	V_{IH} (Note 2)		2		V_{CC} + 1	V
Output LOW Voltage	V_{OL}	I_{OL} = 6mA			0.4	V
Output HIGH Voltage	V_{OH}	I_{OH} = -4mA	2.4			V

NOTES:

1. Typical values are for T_A = +25°C and nominal supply voltage.
2. V_{IL} min. and V_{IH} max. are for reference only and are not tested.

Power-up Timing

PARAMETER	SYMBOL	MAX	UNIT
Power-up to read	t_{PUR}, Note 3	100	µs
Power-up to write	t_{PUW}, Note 3	5	ms

NOTE:

3. This parameter is periodically sampled and not 100% tested.

Capacitance T_A = +25°C, f = 1MHz, V_{CC} = 5V.

SYMBOL	TEST	CONDITIONS	MAX	UNIT
$C_{I/O}$ (Note 9)	Input/output capacitance	$V_{I/O}$ = 0V	10	pF
C_{IN} (Note 9)	Input capacitance	V_{IN} = 0V	6	pF

Endurance and Data Retention

PARAMETER	MIN	MAX	UNIT
Endurance	1,000,000		Cycles
Data retention	100		Years

AC Conditions of Test

Input pulse levels	0V to 3V
Input rise and fall times	5ns
Input and output timing levels	1.5V

Symbol Table

WAVEFORM	INPUTS	OUTPUTS
	Must be steady	Will be steady
	May change from LOW to HIGH	Will change from LOW to HIGH
	May change from HIGH to LOW	Will change from HIGH to LOW
	Don't Care: Changes Allowed	Changing: State Not Known
	N/A	Center Line is High Impedance

Mode Selection

$\overline{CE}$	$\overline{OE}$	$\overline{WE}$	MODE	I/O	POWER
L	L	H	Read	D_{OUT}	active
L	H	L	Write	D_{IN}	active
H	X	X	Standby and write inhibit	High Z	standby
X	L	X	Write inhibit	—	—
X	X	H	Write inhibit	—	—

Equivalent AC Load Circuit

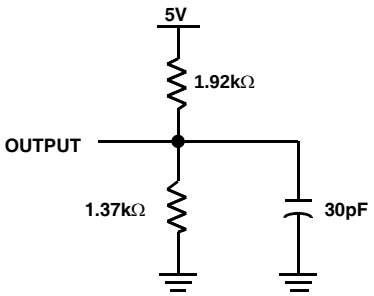

AC Electrical Specifications Over Recommended Operating Conditions, Unless Otherwise Specified.

PARAMETER	SYMBOL	X28HC256-70		X28HC256-90		X28HC256-12		X28HC256-15		UNIT
		MIN	MAX	MIN	MAX	MIN	MAX	MIN	MAX	
Read Cycle Time	t_{RC} (Note 5)	70		90		120		150		ns
Chip Enable Access Time	t_{CE} (Note 5)		70		90		120		150	ns
Address Access Time	t_{AA} (Note 5)		70		90		120		150	ns
Output Enable Access Time	t_{OE}		35		40		50		50	ns
$\overline{CE}$ LOW to Active Output	t_{LZ} (Note 4)	0		0		0		0		ns
$\overline{OE}$ LOW to Active Output	t_{OLZ} (Note 4)	0		0		0		0		ns
$\overline{CE}$ HIGH to High Z Output	t_{HZ} (Note 4)		35		40		50		50	ns
$\overline{OE}$ HIGH to High Z Output	t_{OHZ} (Note 4)		35		40		50		50	ns
Output Hold from Address Change	t_{OH}	0		0		0		0		ns

Read Cycle

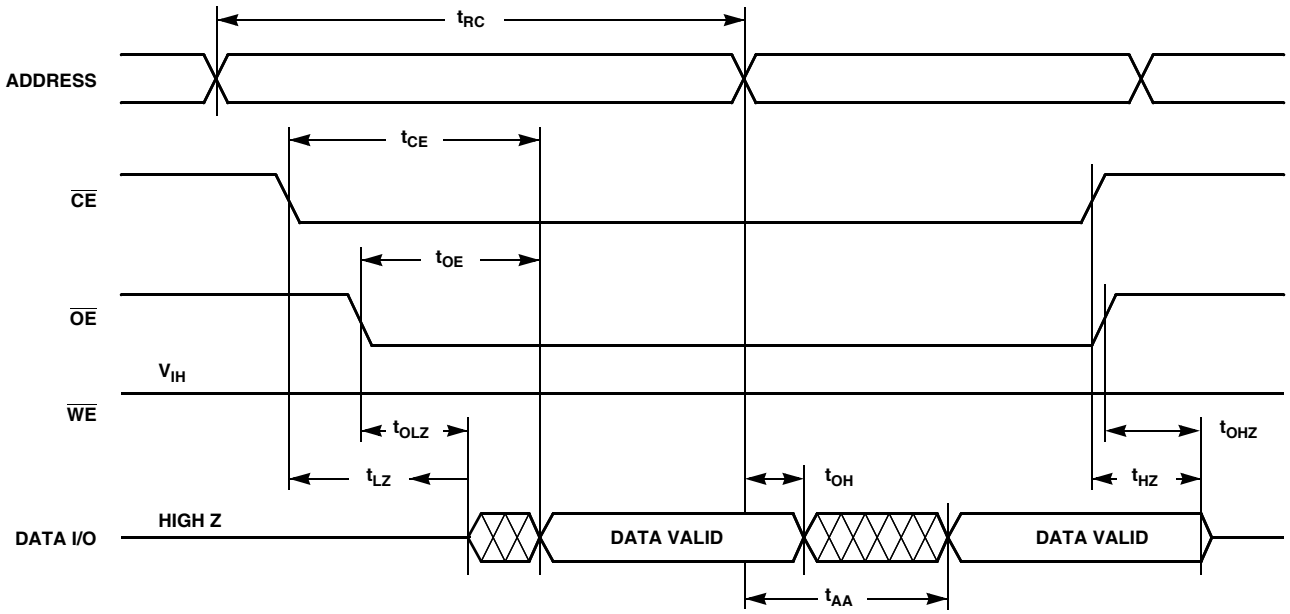

NOTES:

4. t_{LZ} min., t_{HZ}, t_{OLZ} min. and t_{OHZ} are periodically sampled and not 100% tested, t_{HZ} and t_{OHZ} are measured with C_L = 5pF, from the point when $\overline{CE}$, $\overline{OE}$ return HIGH (whichever occurs first) to the time when the outputs are no longer driven.
5. For faster 256k products, refer to X28VC256 product line.

Write Cycle Limits

PARAMETER	SYMBOL	MIN	TYP (Note 6)	MAX	UNIT
Write Cycle Time	t_{WC} (Note 7)		3	5	ms
Address Setup Time	t_{AS}	0			ns
Address Hold Time	t_{AH}	50			ns
Write Setup Time	t_{CS}	0			ns
Write Hold Time	t_{CH}	0			ns
$\overline{CE}$ Pulse Width	t_{CW}	50			ns
$\overline{OE}$ HIGH Setup Time	t_{OES}	0			ns
$\overline{OE}$ HIGH Hold Time	t_{OEH}	0			ns
$\overline{WE}$ Pulse Width	t_{WP}	50			ns
$\overline{WE}$ HIGH Recovery (page write only)	t_{WPH} (Note 8)	50			ns
Data Valid	t_{DV}			1	µs
Data Setup	t_{DS}	50			ns
Data Hold	t_{DH}	0			ns
Delay to Next Write After Polling is True	t_{DW} (Note 8)	10			µs
Byte Load Cycle	t_{BLC}	0.15		100	µs

NOTES:

6. Typical values are for T_A = +25°C and nominal supply voltage.
7. t_{WC} is the minimum cycle time to be allowed from the system perspective unless polling techniques are used. It is the maximum time the device requires to automatically complete the internal write operation.
8. t_{WPH} and t_{DW} are periodically sampled and not 100% tested.

$\overline{WE}$ Controlled Write Cycle

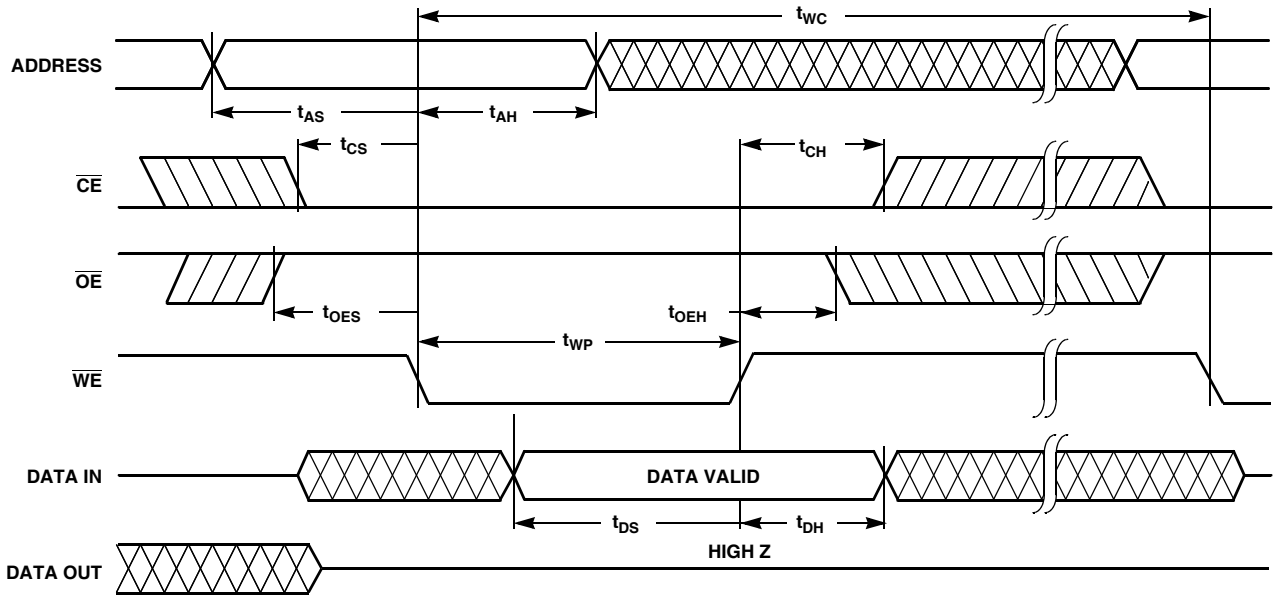

$\overline{CE}$ Controlled Write Cycle

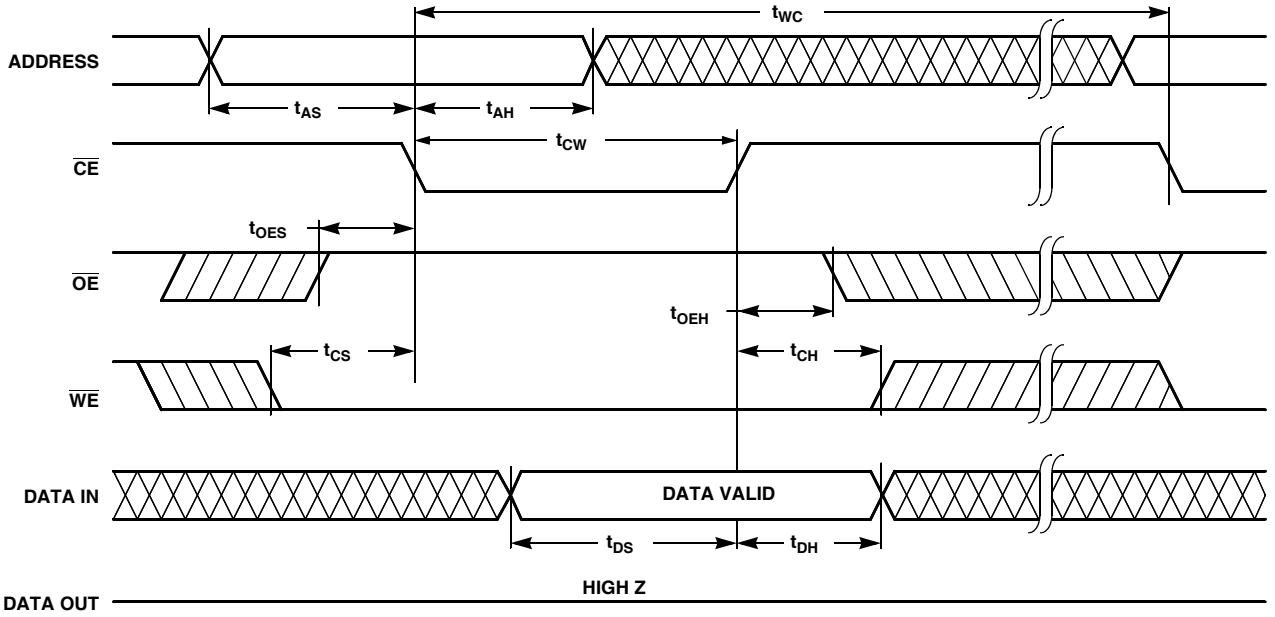

Page Write Cycle

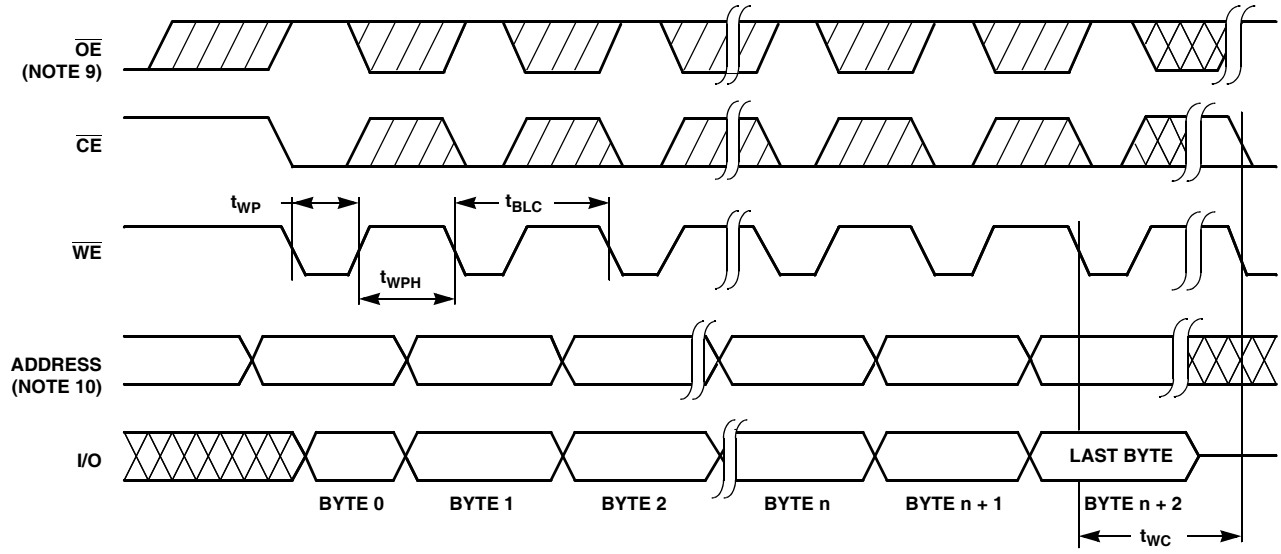

*For each successive write within the page write operation, A_7 to A_{15} should be the same or writes to an unknown address could occur.

NOTES:

9. Between successive byte writes within a page write operation, $\overline{OE}$ can be strobed LOW: e.g. this can be done with $\overline{CE}$ and $\overline{WE}$ HIGH to fetch data from another memory device within the system for the next write; or with $\overline{WE}$ HIGH and $\overline{CE}$ LOW effectively performing a polling operation.
10. The timings shown above are unique to page write operations. Individual byte load operations within the page write must conform to either the $\overline{CE}$ or $\overline{WE}$ controlled write cycle timing.

$\overline{\text{DATA}}$ Polling Timing Diagram (Note 11)

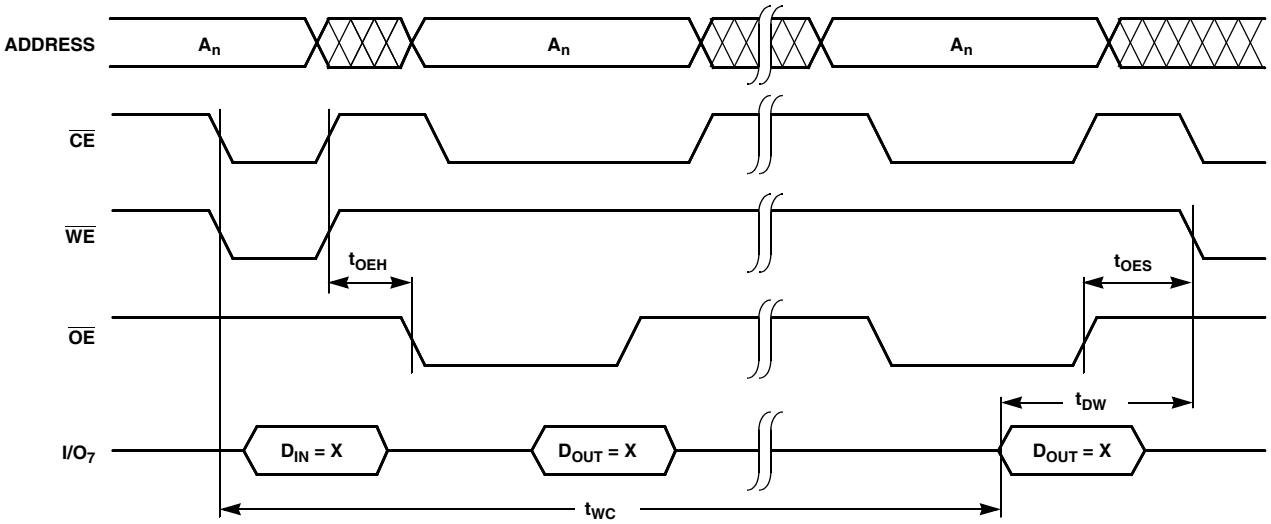

Toggle Bit Timing Diagram (Note 11)

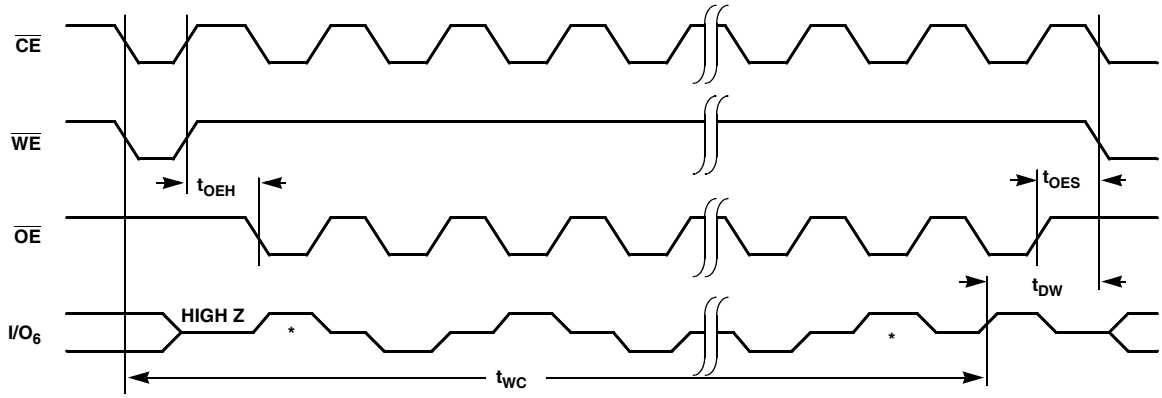

* I/O_6 beginning and ending state will vary, depending upon actual t_{WC}.

NOTE:

11. Polling operations are by definition read cycles and are therefore subject to read cycle timings.

Ceramic Dual-In-Line Frit Seal Packages (CERDIP)

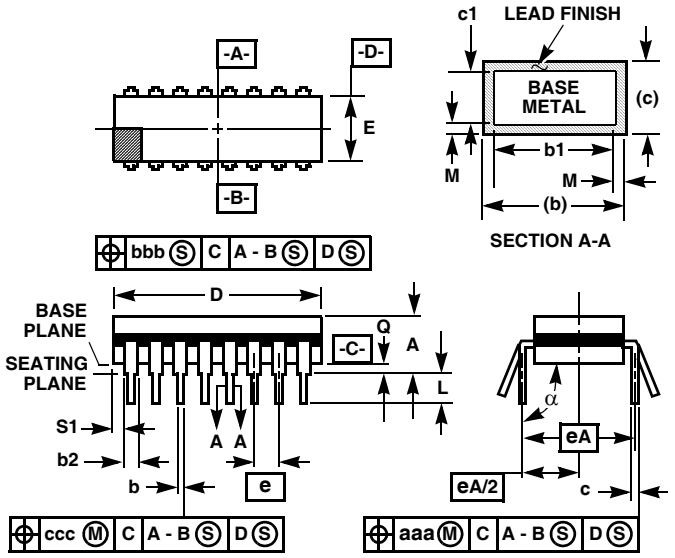

NOTES:

1. Index area: A notch or a pin one identification mark shall be located adjacent to pin one and shall be located within the shaded area shown. The manufacturer's identification shall not be used as a pin one identification mark.
2. The maximum limits of lead dimensions b and c or M shall be measured at the centroid of the finished lead surfaces, when solder dip or tin plate lead finish is applied.
3. Dimensions b1 and c1 apply to lead base metal only. Dimension M applies to lead plating and finish thickness.
4. Corner leads (1, N, N/2, and N/2+1) may be configured with a partial lead paddle. For this configuration dimension b3 replaces dimension b2.
5. This dimension allows for off-center lid, meniscus, and glass overrun.
6. Dimension Q shall be measured from the seating plane to the base plane.
7. Measure dimension S1 at all four corners.
8. N is the maximum number of terminal positions.
9. Dimensioning and tolerancing per ANSI Y14.5M - 1982.
10. Controlling dimension: INCH.

F28.6 MIL-STD-1835 GDIP1-T28 (D-10, CONFIGURATION A)
28 LEAD CERAMIC DUAL-IN-LINE FRIT SEAL PACKAGE

SYMBOL	INCHES		MILLIMETERS		NOTES
	MIN	MAX	MIN	MAX	
A	-	0.232	-	5.92	-
b	0.014	0.026	0.36	0.66	2
b1	0.014	0.023	0.36	0.58	3
b2	0.045	0.065	1.14	1.65	-
b3	0.023	0.045	0.58	1.14	4
c	0.008	0.018	0.20	0.46	2
c1	0.008	0.015	0.20	0.38	3
D	-	1.490	-	37.85	5
E	0.500	0.610	12.70	15.49	5
e	0.100 BSC		2.54 BSC		-
eA	0.600 BSC		15.24 BSC		-
eA/2	0.300 BSC		7.62 BSC		-
L	0.125	0.200	3.18	5.08	-
Q	0.015	0.060	0.38	1.52	6
S1	0.005	-	0.13	-	7
α	90°	105°	90°	105°	-
aaa	-	0.015	-	0.38	-
bbb	-	0.030	-	0.76	-
ccc	-	0.010	-	0.25	-
M	-	0.0015	-	0.038	2, 3
N	28		28		8

Rev. 0 4/94

Plastic Leaded Chip Carrier Packages (PLCC)

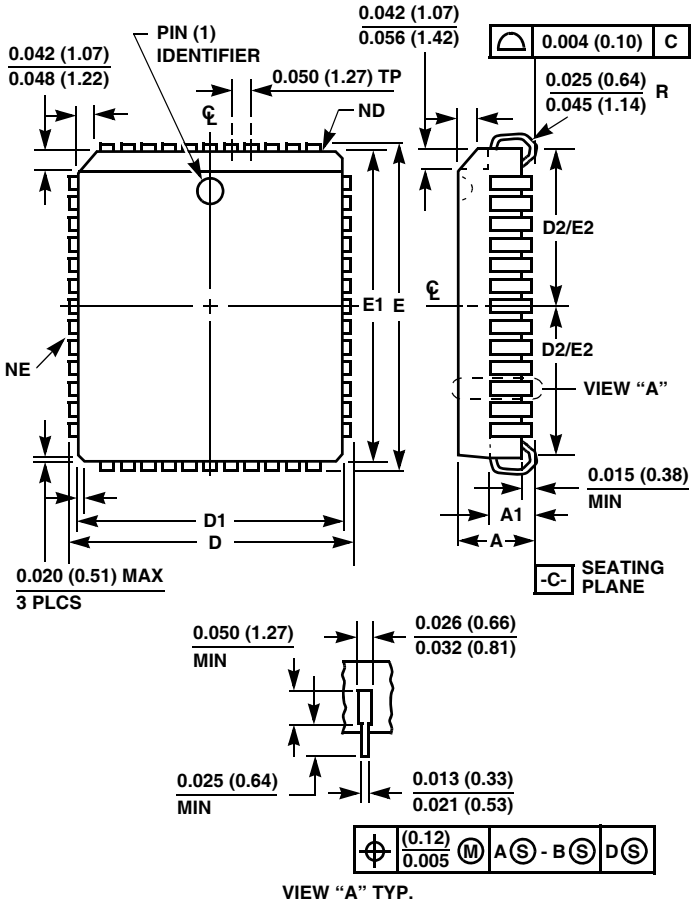

N32.45x55 (JEDEC MS-016AE ISSUE A)
32 LEAD PLASTIC LEADED CHIP CARRIER PACKAGE

SYMBOL	INCHES		MILLIMETERS		NOTES
	MIN	MAX	MIN	MAX	
A	0.125	0.140	3.18	3.55	-
A1	0.060	0.095	1.53	2.41	-
D	0.485	0.495	12.32	12.57	-
D1	0.447	0.453	11.36	11.50	3
D2	0.188	0.223	4.78	5.66	4, 5
E	0.585	0.595	14.86	15.11	-
E1	0.547	0.553	13.90	14.04	3
E2	0.238	0.273	6.05	6.93	4, 5
N	28		28		6
ND	7		7		7
NE	9		9		7

Rev. 0 7/98

NOTES:

1. Controlling dimension: INCH. Converted millimeter dimensions are not necessarily exact.
2. Dimensions and tolerancing per ANSI Y14.5M-1982.
3. Dimensions D1 and E1 do not include mold protrusions. Allowable mold protrusion is 0.010 inch (0.25mm) per side. Dimensions D1 and E1 include mold mismatch and are measured at the extreme material condition at the body parting line.
4. To be measured at seating plane -C- contact point.
5. Centerline to be determined where center leads exit plastic body.
6. "N" is the number of terminal positions.
7. ND denotes the number of leads on the two shorts sides of the package, one of which contains pin #1. NE denotes the number of leads on the two long sides of the package.

Ceramic Pin Grid Array Package (CPGA)

G28.550x650A
28 LEAD CERAMIC PIN GRID ARRAY PACKAGE

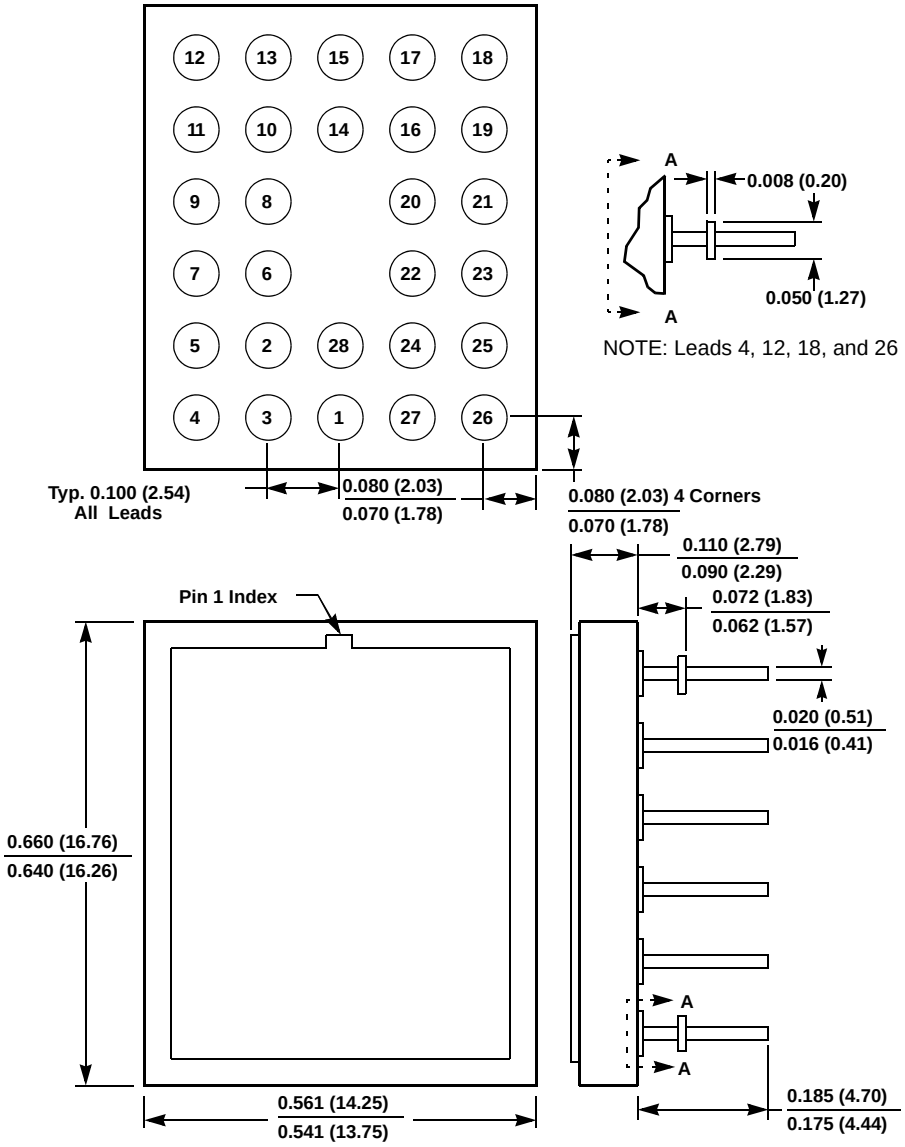

NOTE: All dimensions in inches (in parentheses in millimeters).

Rev. 0 12/05

Small Outline Package Family (SO)

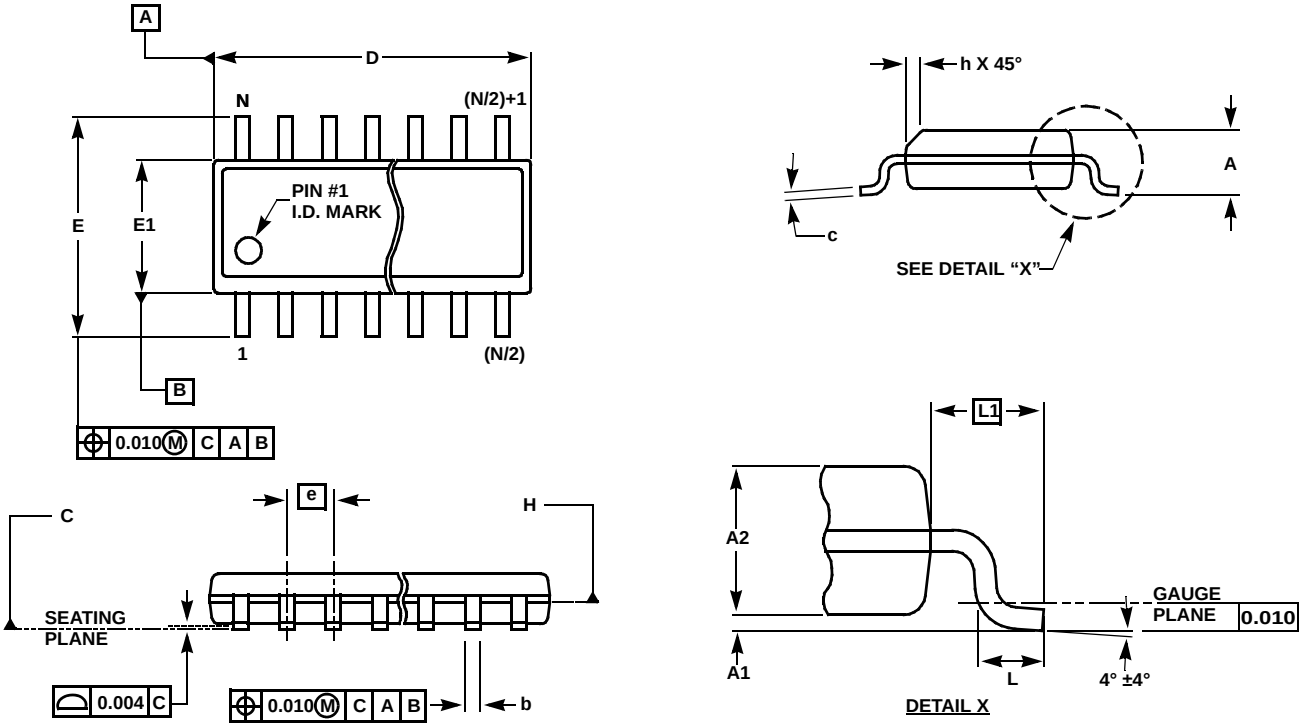

MDP0027

SMALL OUTLINE PACKAGE FAMILY (SO)

SYMBOL	INCHES							TOLERANCE	NOTES
	SO-8	SO-14	SO16 (0.150")	SO16 (0.300") (SOL-16)	SO20 (SOL-20)	SO24 (SOL-24)	SO28 (SOL-28)		
A	0.068	0.068	0.068	0.104	0.104	0.104	0.104	MAX	-
A1	0.006	0.006	0.006	0.007	0.007	0.007	0.007	±0.003	-
A2	0.057	0.057	0.057	0.092	0.092	0.092	0.092	±0.002	-
b	0.017	0.017	0.017	0.017	0.017	0.017	0.017	±0.003	-
c	0.009	0.009	0.009	0.011	0.011	0.011	0.011	±0.001	-
D	0.193	0.341	0.390	0.406	0.504	0.606	0.704	±0.004	1, 3
E	0.236	0.236	0.236	0.406	0.406	0.406	0.406	±0.008	-
E1	0.154	0.154	0.154	0.295	0.295	0.295	0.295	±0.004	2, 3
e	0.050	0.050	0.050	0.050	0.050	0.050	0.050	Basic	-
L	0.025	0.025	0.025	0.030	0.030	0.030	0.030	±0.009	-
L1	0.041	0.041	0.041	0.056	0.056	0.056	0.056	Basic	-
h	0.013	0.013	0.013	0.020	0.020	0.020	0.020	Reference	-
N	8	14	16	16	20	24	28	Reference	-

Rev. M 2/07

NOTES:

1. Plastic or metal protrusions of 0.006" maximum per side are not included.
2. Plastic interlead protrusions of 0.010" maximum per side are not included.
3. Dimensions "D" and "E1" are measured at Datum Plane "H".
4. Dimensioning and tolerancing per ASME Y14.5M-1994

Dual-In-Line Plastic Packages (PDIP)

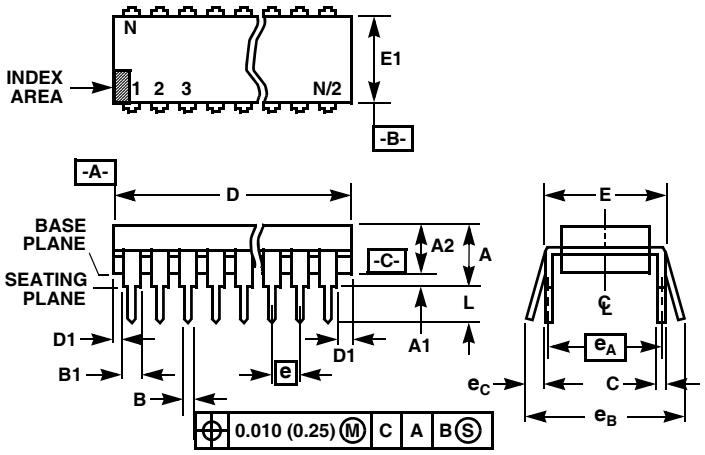

NOTES:

1. Controlling Dimensions: INCH. In case of conflict between English and Metric dimensions, the inch dimensions control.
2. Dimensioning and tolerancing per ANSI Y14.5M-1982.
3. Symbols are defined in the “MO Series Symbol List” in Section 2.2 of Publication No. 95.
4. Dimensions A, A1 and L are measured with the package seated in JEDEC seating plane gauge GS-3.
5. D, D1, and E1 dimensions do not include mold flash or protrusions. Mold flash or protrusions shall not exceed 0.010 inch (0.25mm).
6. E and e_A are measured with the leads constrained to be perpendicular to datum -C-.
7. e_B and e_C are measured at the lead tips with the leads unconstrained. e_C must be zero or greater.
8. B1 maximum dimensions do not include dambar protrusions. Dambar protrusions shall not exceed 0.010 inch (0.25mm).
9. N is the maximum number of terminal positions.
10. Corner leads (1, N, N/2 and N/2 + 1) for E8.3, E16.3, E18.3, E28.3, E42.6 will have a B1 dimension of 0.030 - 0.045 inch (0.76 - 1.14mm).

E28.6 (JEDEC MS-011-AB ISSUE B)
28 LEAD DUAL-IN-LINE PLASTIC PACKAGE

SYMBOL	INCHES		MILLIMETERS		NOTES
	MIN	MAX	MIN	MAX	
A	-	0.250	-	6.35	4
A1	0.015	-	0.39	-	4
A2	0.125	0.195	3.18	4.95	-
B	0.014	0.022	0.356	0.558	-
B1	0.030	0.070	0.77	1.77	8
C	0.008	0.015	0.204	0.381	-
D	1.380	1.565	35.1	39.7	5
D1	0.005	-	0.13	-	5
E	0.600	0.625	15.24	15.87	6
E1	0.485	0.580	12.32	14.73	5
e	0.100 BSC		2.54 BSC		-
e_A	0.600 BSC		15.24 BSC		6
e_B	-	0.700	-	17.78	7
L	0.115	0.200	2.93	5.08	4
N	28		28		9

Rev. 1 12/00

All Intersil U.S. products are manufactured, assembled and tested utilizing ISO9000 quality systems.
Intersil Corporation’s quality certifications can be viewed at www.intersil.com/design/quality

Intersil products are sold by description only. Intersil Corporation reserves the right to make changes in circuit design, software and/or specifications at any time without notice. Accordingly, the reader is cautioned to verify that data sheets are current before placing orders. Information furnished by Intersil is believed to be accurate and reliable. However, no responsibility is assumed by Intersil or its subsidiaries for its use; nor for any infringements of patents or other rights of third parties which may result from its use. No license is granted by implication or otherwise under any patent or patent rights of Intersil or its subsidiaries.

For information regarding Intersil Corporation and its products, see www.intersil.com