APPROVAL SHEET

WW12R, WW08R, WW06R

±1%, ±5%

Metal Low Ohm Power Chip Resistors
Size 1206 (1W), 0805 (0.5W), 0603 (0.33W)
RoHS Exemption free and Lead free
Sensing Type

*Contents in this sheet are subject to change without prior notice.

FEATURE

1. Metal ultra low and stable TCR performance
2. High power rating and compact size
3. High reliability and stability
4. Reduced size of final equipment
5. RoHS exemption free & Halogen free & Lead free
6. Inductance below 1nH

APPLICATION

- Power supply
- PDA
- Digital meter
- Computer
- Automotives
- Battery charger
- DC-DC power converter

DESCRIPTION

The resistors are constructed in a high grade low resistive metal body. The resistive layer is covered with a protective coat and printed a resistance marking code over it. Finally, the two external end terminations are added. For ease of soldering the outer layer of these end terminations is a Lead free terminations.



Fig 1. Construction of Chip-R

QUICK REFERENCE DATA

Item		General Specification	
Series No.	WW06R	WW08R	WW12R
Size code	0603 (1608)	0805 (2012)	1206 (3216)
Resistance Tolerance	±5% , ±1%		
Resistance Range	5, 10mΩ	2, 3, 4, 5, 6, 7, 8, 9 10mΩ,	1 ~ 15 mΩ
TCR (ppm/°C)	±70 ppm/°C		
Max. power at T_{amb}=70°C	1/3 W	1/2 W	1W
Max. Operation Current (DC or RMS)	8.1A, 5.7A	7A ~ 15.8A	31.6A ~ 8.2A
Operation temperature	-55 ~ +155'C		

Note : Max. Operation Current : So called RCWC (Rated Continuous Working Current) is determined by

$$RCWC = \sqrt{Rated\ Power / Resistance\ Value}$$ listed above.

MECHANICAL DATA

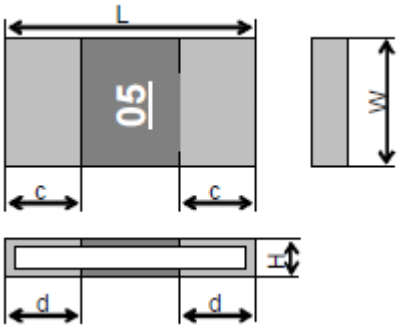

Unit: mm

Type	Size (inch)	Resistance	L (mm)	W (mm)	H (mm)	c (mm)	d (mm)
WW06R	0603	5mΩ	1.60±0.10	0.80±0.10	0.33±0.10	0.20±0.10	0.50±0.10
		10mΩ			0.30±0.10	0.20±0.10	0.30±0.10
WW08R	0805	2mΩ	2.0±0.15	1.25±0.15	0.22±0.10	0.35±0.10	0.55±0.20
		3mΩ			0.45±0.10	0.35±0.10	0.75±0.20
		4mΩ			0.35±0.10	0.35±0.10	0.75±0.20
		5mΩ			0.35±0.10	0.35±0.10	0.60±0.20
		6mΩ			0.35±0.10	0.35±0.10	0.47±0.20
		7mΩ			0.22±0.10	0.35±0.10	0.75±0.20
		8mΩ			0.22±0.10	0.35±0.10	0.60±0.20
		9mΩ			0.22±0.10	0.35±0.10	0.52±0.20
		10mΩ			0.22±0.10	0.30±0.10	0.47±0.20
WW12R	1206	1mΩ	3.2±0.15	1.60±0.15	0.32±0.10	1.10±0.25	

		2mΩ			0.32±0.10	0.50±0.25	
		3mΩ			0.35±0.10	0.70±0.25	1.30±0.25
		4mΩ			0.35±0.10	1.10±0.25	
		5mΩ			0.35±0.10	1.00±0.25	
		6mΩ			0.35±0.1	0.80±0.25	
		7mΩ			0.35±0.1	0.70±0.25	
		8mΩ			0.35±0.1	0.50±0.25	
		9mΩ			0.28±0.1	0.55±0.25	
		10mΩ			0.28±0.1	0.50±0.25	
		11mΩ			0.22±0.1	0.80±0.25	
		12mΩ			0.22±0.1	0.70±0.25	
		13mΩ			0.22±0.1	0.60±0.25	
		14mΩ			0.22±0.1	0.55±0.25	
		15mΩ			0.22±0.1	0.50±0.25	

MARKING

WW12R/WW08R each resistor is marked with a 2-digit code with underline on the protective coating to designate the nominal resistance value. WW06R has no marking!

Example:

05 = 0.005Ω
10 = 0.010Ω

FUNCTIONAL DESCRIPTION

Derating curve

The power that the resistor can dissipate depends on the operating temperature; see Fig.2

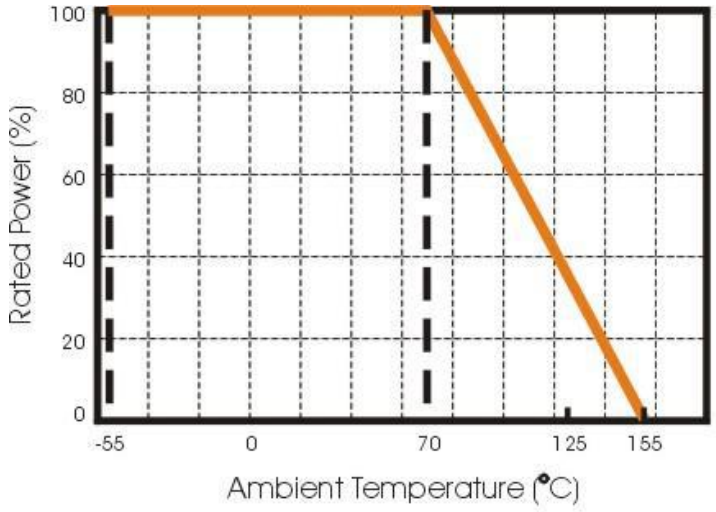

Fig.2 Maximum dissipation in percentage of rated power
As a function of the ambient temperature

SOLDERING CONDITIONS

The robust construction of chip resistors allows them to be completely immersed in a solder bath of 260°C for 10 seconds. Therefore, it is possible to mount Surface Mount Resistors on one side of a PCB and other discrete components on the reverse (mixed PCBs).

Surface Mount Resistors are tested for solderability at 245°C during 3 seconds within lead-free solder bath. The test condition for no leaching is 260°C for 30 seconds. Typical examples of soldering processes that provide reliable joints without any damage are given in Fig

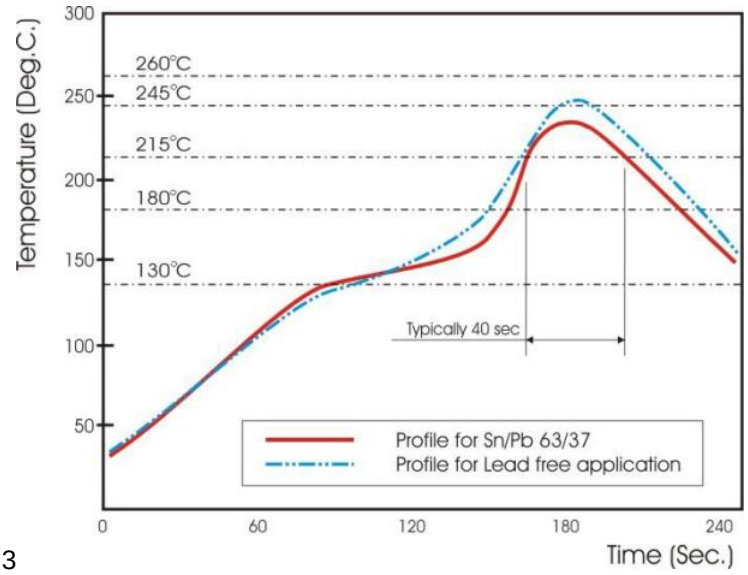

3

Fig 3. Infrared soldering profile for Chip Resistors WWxxR

CATALOGUE NUMBERS

The resistors have a catalogue number starting with .

WW06	R	R005	J	T	L
Size code WW06 : 0603 WW08 : 0805 WW12 :1206	**Type code** R : 1/3W, 0603 1/2W, 0805 1W, 1206	**Resistance code** R is first digit followed by 3 significant digits. 0.010Ω = R010 0.005Ω = R005	**Tolerance** J : ±5% F : ±1%	**Packaging code** T : 7" reel Q : 10" reel	**Termination code** L = Sn base (lead free)

Reeled tape packaging : 8mm width paper taping 5,000pcs per 7" reel. 10,000pcs per 10" reel.

RESISTANCE MEASUREMENT SCHEMATIC DIAGRAM

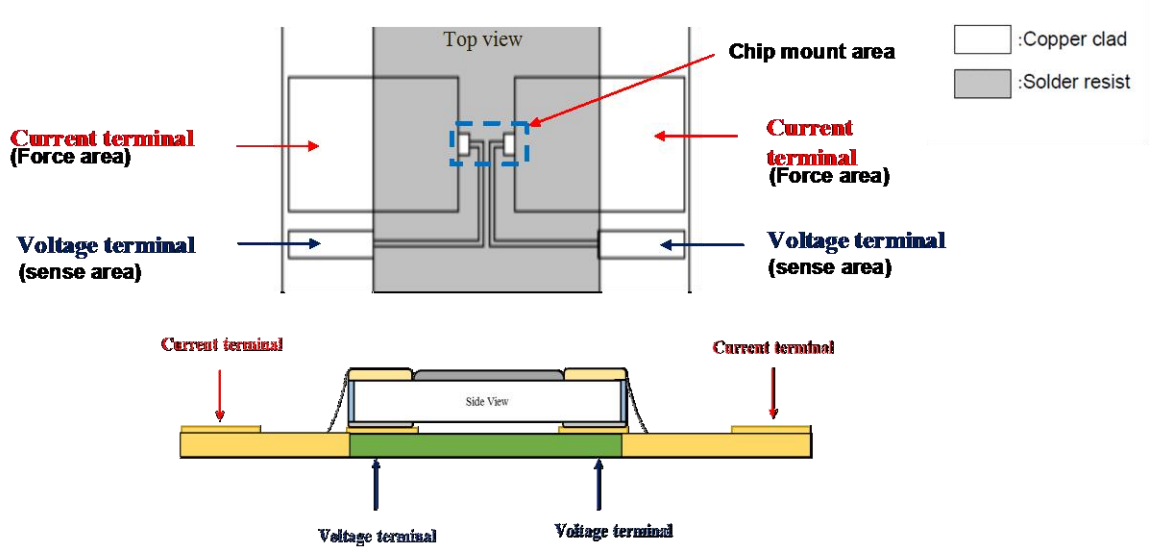

The resistance measured is based on mounted on PCB to match with customer field application.

RECOMMENDED PCB LAND PATTERN

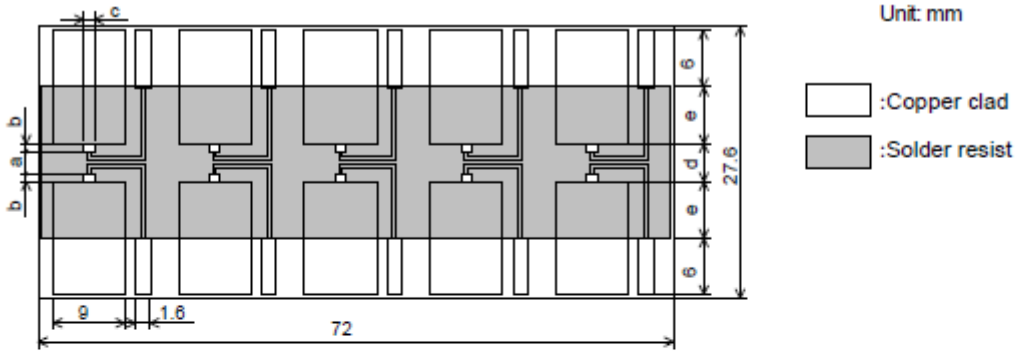

Style	Rated resistance (mΩ)	a	b	c	d	e
WW06R	5	0.6	0.9	0.9	2.2	6.2
	10	1.0	0.6			
WW08R	2,3	0.5	1.1	1.36	2.7	5.95
	4 to 10	0.8	0.95			
WW12R	1	1.0	1.45	1.7	3.9	5.35
	2	2.1	0.9			
	3	0.8	1.55			
	4	1.0	1.45			
	5 and 6	1.4	1.25			
	7 to 15	2.1	0.9			

Remark: Material: Epoxy resin based as glass fabric(Specified in JIS C 6484).
Thickness: 1.6mm Thickness of copper clad: 0.035mm

TEST & REQUIREMENTS

Table– 4(1)

No.	Test items	Condition of test (JIS C 5201–1)	Performance requirements
1	Visual examination	Sub–clause 4.4.1 Checked by visual examination.	As in 4.4.1 The marking shall be legible, as checked by visual examination.
2	Dimension Resistance	Sub–clause 4.4.2 Resistance value shall be measured by mounting the substrate of the following condition. 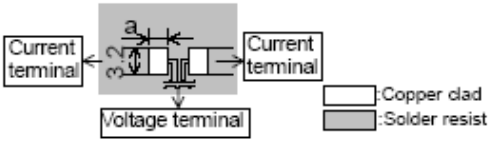 a: 2.9mm (2mΩ, 3mΩ, 4mΩ), 1.8mm (5mΩ) Thickness of copper clad: 0.035mm 4-Terminal method Measurement current: 1(A) Note:The measuring apparatus corresponding to DC Low–ohm Mater (1A) of AX–1152D for ADEX CORPORATION.	As specified in Table–3 of this specification. As in 4.5.2 The resistance value shall correspond with the rated resistance taking into account the specified tolerance.
3	Voltage proof	Sub–clause 4.7 Method: 4.6.1.4(See Figure–5) Test voltage: Alternating voltage with a peak value of 1.42 times the insulation voltage. Duration: 60 s±5 s Insulation resistance Test voltage: Insulation voltage Duration: 1 min.	No breakdown or flash over R ≥ 1 GΩ
4	Solderability	Sub–clause 4.17 Without aging Flux: The resistors shall be immersed in a non–activated soldering flux for 2 s. Bath temperature: 235 °C±5 °C Immersion time: 2 s±0.5 s	As in 4.17.4.5 The terminations shall be covered with a smooth and bright solder coating.
5	Mounting Overload (in the mounted state) Solvent resistance of the marking	Sub–clause 4.31 Substrate material: Epoxide woven glass Test substrate: Figure–3 Sub–clause 4.13 The applied voltage shall be 2.5 times the rated voltage or the current corresponding to. Duration: 2 s Visual examination Resistance Sub–clause 4.30 Solvent: 2–propanol Solvent temperature: 23 °C±5 °C Method 1 Rubbing material: cotton wool Without recovery	 No visible damage Δ R ≤ ±1% Legible marking

Table–4(2)

No	Test items	Condition of test (JIS C 5201–1)	Performance requirements
6	Mounting Bound strength of the end face plating Final measurements	Sub–clause 4.31 Substrate material: Epoxide woven glass Test substrate: Figure–4 Sub–clause 4.33 Bent value: 1 mm Resistance Sub–clause 4.33.6 Visual examination	 ΔR ≤ ±1% No visible damage
7	Resistance to soldering heat Component solvent resistance	Sub–clause 4.18 Solder temperature: 260 °C±5 °C Immersion time: 10 s±0.5 s Visual examination Resistance Sub–clause 4.29 Solvent: 2–propanol Solvent temperature: 23 °C±5 °C Method 2 Recovery: 48 h Visual examination Resistance	 As in 4.18.3.4 No sign of damage such as cracks. Δ R ≤ ±1% No visible damage ΔR ≤ ±1%
8	Mounting Adhesion Rapid change temperature	Sub–clause 4.31 Substrate material: Epoxide woven glass Test substrate: Figure–3 Sub–clause 4.32 Force: 5 N Duration: 10 s±1 s Visual examination Sub–clause 4.19 Lower category temperature:–55 °C Upper category temperature:+155 °C Duration of exposure at each temperature: 30 min. Number of cycles: 5 cycles. Visual examination Resistance	 No visible damage No visible damage Δ R ≤ ±1%

Table–4(3)

No	Test items	Condition of test (JIS C 5201–1)	Performance requirements
9	Climatic sequence –Dry heat –Damp heat, cycle (12+12hour cycle) First cycle –Cold –Damp heat, cycle (12+12hour cycle) Remaining cycle –D.C. load	Sub–clause 4.23 Sub–clause 4.23.2 Test temperature: +155 °C Duration: 16 h Sub–clause 4.23.3 Test method: 2 Test temperature: 55 °C [Severity(2)] Sub–clause 4.23.4 Test temperature –55 °C Duration: 2h Sub–clause 4.23.6 Test method: 2 Test temperature: 55 °C [Severity (2)] Number of cycles: 5 cycles Sub–clause 4.23.7 The applied current shall be the rated current. Duration: 1 min. Visual examination Resistance	No visible damage $\Delta R \leq \pm$**(1%+0.0005ohm)**
10	Mounting Endurance at 70 °C	Sub–clause 4.31 Substrate material: Epoxide woven glass Test substrate: Figure–3 Sub–clause 4.25.1 Ambient temperature: 70 °C±2 °C Duration: 1000 h The current shall be applied in cycles of 1.5 h on and 0.5 h. The applied current shall be the rated current Examination at 48 h, 500 h and 1000 h: Visual examination Resistance	No visible damage $\Delta R \leq$ **(1%+0.0005ohm)**

Table–4(4)

No	Test items	Condition of test (JIS C 5201–1)	Performance requirements
11	Mounting Variation of resistance with temperature	Sub–clause 4.31 Substrate material: Epoxide woven glass Test substrate: Figure–3 Sub–clause 4.8 +20 °C / +155 °C	 As in Table–1
12	Mounting Damp heat, steady state	Sub–clause 4.31 Substrate material: Epoxide woven glass Test substrate: Figure–3 Sub–clause 4.24 Ambient temperature: 40 °C±2 °C Relative humidity: 93^{+2}_{-3} % Without current applied. Visual examination Resistance	 No visible damage Legible marking $\Delta R \leq \pm$**(1%+0.0005ohm)**
13	Dimensions (detail) Mounting Endurance at upper category temperature	Sub–clause 4.4.3 Sub–clause 4.31 Substrate material: Epoxide woven glass Test substrate: Figure–3 Sub–clause 4.25.3 Ambient temperature:155 °C±2 °C Duration: 1000 h Examination at 48 h, 500 h and 1000 h: Visual examination Resistance	As in Table–4 No visible damage $\Delta R \leq \pm$**(1%+0.0005ohm)**

PACKAGING

Paper Tape specifications (unit :mm)

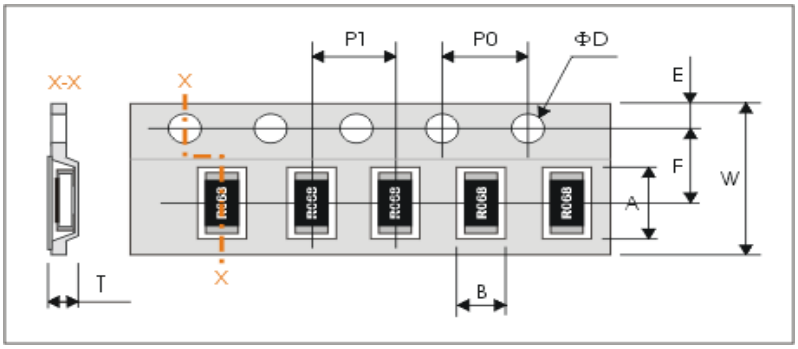

Symbol	A	B	W	F	E
WW06R	1.90±0.20	1.15±0.15	8.00±0.20	3.50±0.05	1.75±0.10
WW08R	2.50±0.20	1.65±0.15			
WW12R	3.60±0.20	2.00±0.15			

Symbol	P1	P0	ΦD	T
WW06R	4.00±0.10	4.00±0.10	$\Phi 1.50^{+0.1}_{-0.0}$	0.8 max.
WW08R				1.0 max.
WW12R				1.0 max.

Reel dimensions

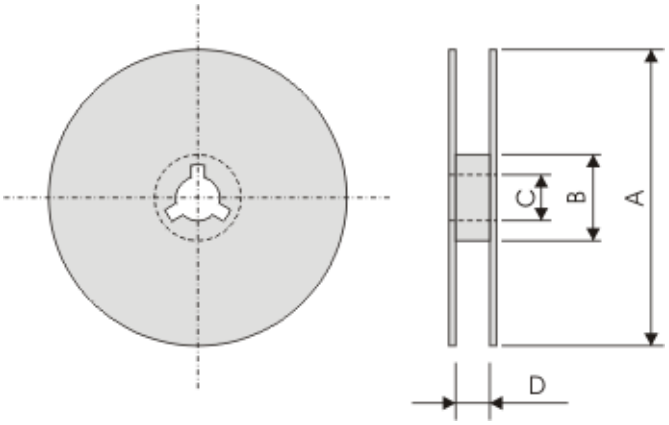

Symbol	A	B	C	D
7”	Φ180.0 -1.5	Φ60.0±1.0	13.0±0.2	9.0 +1.0
10”	Φ254.0 ±2.0	Φ100.0±1.0	13.0±0.2	9.0 +1.0

Taping quantity

- Chip resistors 5,000 pcs per 7” reel; 10,000pcs per 10” reel.