Online data sheet



WTT280L-2P2536

PowerProx

PHOTOELECTRIC SENSORS

SICK
Sensor Intelligence.



Illustration may differ

Ordering information

Type	Part no.
WTT280L-2P2536	6048062

Other models and accessories → www.sick.com/PowerProx

Detailed technical data

Features

Sensor/ detection principle	Photoelectric proximity sensor, Background suppression
Dimensions (W x H x D)	23.5 mm x 76 mm x 55.8 mm
Housing design (light emission)	Rectangular
Sensing range max.	200 mm ... 4,000 mm [1] 200 mm ... 3,000 mm [2]
Sensing range	200 mm ... 4,000 mm [1] [3] 200 mm ... 3,000 mm [2] [3]
Type of light	Visible red light
Light source	Laser [4]
Light spot size (distance)	Ø 12 mm (3 m)
Laser class	1 (EN 60825-1:2014, IEC 60825-1:2014)
Adjustment	Potentiometer (2 x)

[1] Object with 90 % reflectance (referred to standard white, DIN 5033).
[2] Objects to be sensed with 6 % reflectivity (based on black).
[3] Einstellbar.
[4] Average service life: 100,000 h at T_U = +25 °C.

Mechanics/electronics

Supply voltage	10 V DC ... 30 V DC [1]
Ripple	≤ 3 V_{pp}
Power consumption	≤ 70 mA [2]
Output type	PNP
Number of switching outputs	2 (Q1, Q2) [3]
Switching mode	Light/dark switching
Switching mode selector	Selectable via light/dark rotary switch
Output current $I_{max.}$	≤ 100 mA
Response time	≤ 0.5 ms [4]
Switching frequency	1,000 Hz [5]
Analog output	-
Input	Sender off
Connection type	Male connector M12, 5-pin
Circuit protection	A [6] B [7] C [8] D [9]
Protection class	III
Weight	120 g
Housing material	Plastic, ABS
Optics material	Plastic, PMMA
Enclosure rating	IP67
EMC	EN 60947-5-2
Ambient operating temperature	–10 °C ... +50 °C
Ambient storage temperature	–40 °C ... +70 °C
UL File No.	NRKH2.E300503 & NRKH8.E300503

[1] Limit values. Operated in short-circuit protected network: max. 8 A.
[2] Without load.
[3] Q1, Q2 = 2 switching thresholds, light/dark switching selectable via light/dark selector.
[4] Signal transit time with resistive load.
[5] With light/dark ratio 1:1.
[6] A = V_S connections reverse-polarity protected.
[7] B = output reverse-polarity protected.
[8] C = interference suppression.
[9] D = outputs overcurrent and short-circuit protected.

Classifications

ECl@ss 5.0	27270904
ECl@ss 5.1.4	27270904
ECl@ss 6.0	27270904
ECl@ss 6.2	27270904
ECl@ss 7.0	27270904
ECl@ss 8.0	27270904

ECl@ss 8.1	27270904
ECl@ss 9.0	27270904
ETIM 5.0	EC002719
ETIM 6.0	EC002719
UNSPSC 16.0901	39121528

Adjustments possible

WxT280L-2xxxx6

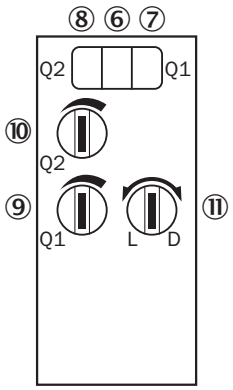

⑥ LED indicator green: Stability indicator
⑦ Status indicator LED, yellow: Status of received light beam (switching output 1)
⑧ Status indicator LED, yellow: Status of received light beam (switching output 2)
⑨ Sensing range adjustment: potentiometer for switching output 1
⑩ Sensing range adjustment: potentiometer for switching output 2
⑪ Light/dark selector

Connection diagram

Cd-211

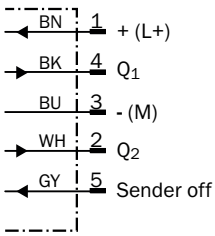

Characteristic curve

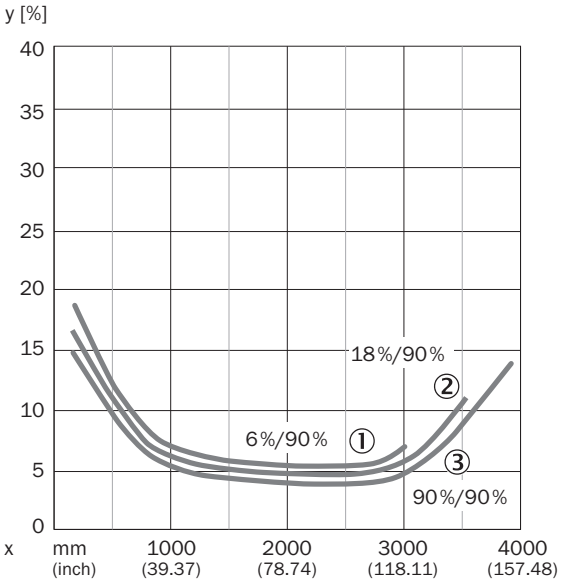

① Sensing range on black, 6% remission
② Sensing range on gray, 18 % remission
③ Sensing range on white, 90% remission

Sensing range diagram

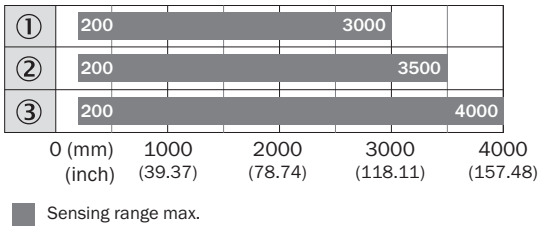

① Sensing range on black, 6% remission
② Sensing range on gray, 18 % remission
③ Sensing range on white, 90% remission

Dimensional drawing (Dimensions in mm (inch))

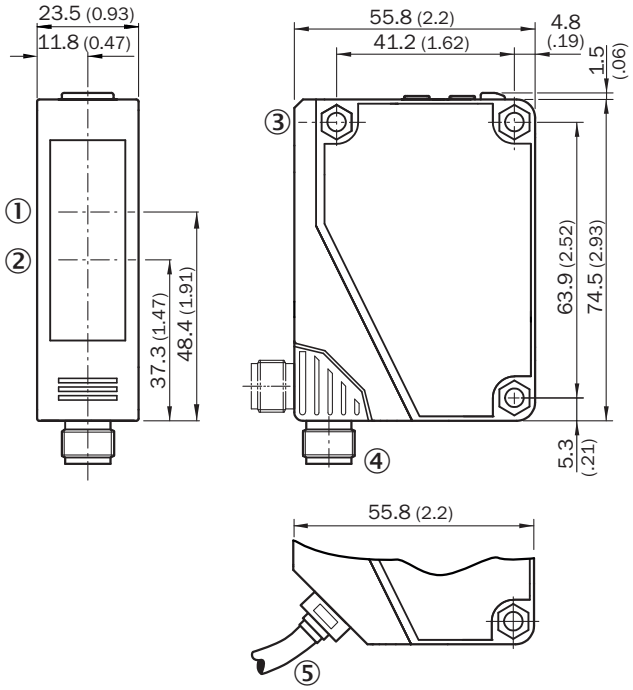

① Center of optical axis, receiver
② Center of optical axis, sender
③ Mounting hole, Ø 4.3 mm
④ M12 plug connector, 5-pin, can be rotated through 90°
⑤ Cable, 2 m, 5-wire, Ø 3.8 mm

Recommended accessories

Other models and accessories ➜ www.sick.com/PowerProx

	Brief description	Type	Part no.
Universal bar clamp systems			
	Plate N04 for universal clamp, steel, Zinc plated steel (sheet), Zinc die cast (clamping bracket), Universal clamp (5322626), mounting hardware	BEF-KHS-N04	2051610
	Plate N04N for universal clamp bracket, stainless steel, Stainless steel 1.4571 (sheet), Stainless steel 1.4408 (clamp), Universal clamp (5322626), mounting hardware	BEF-KHS-N04N	2051620
Mounting brackets and plates			
	Mounting bracket, Stainless steel V2A (1.4301), mounting hardware included	BEF-W280	5313885

SICK AT A GLANCE

SICK is one of the leading manufacturers of intelligent sensors and sensor solutions for industrial applications. A unique range of products and services creates the perfect basis for controlling processes securely and efficiently, protecting individuals from accidents and preventing damage to the environment.

We have extensive experience in a wide range of industries and understand their processes and requirements. With intelligent sensors, we can deliver exactly what our customers need. In application centers in Europe, Asia and North America, system solutions are tested and optimized in accordance with customer specifications. All this makes us a reliable supplier and development partner.

Comprehensive services complete our offering: SICK LifeTime Services provide support throughout the machine life cycle and ensure safety and productivity.

For us, that is “Sensor Intelligence.”

WORLDWIDE PRESENCE:

Contacts and other locations –www.sick.com