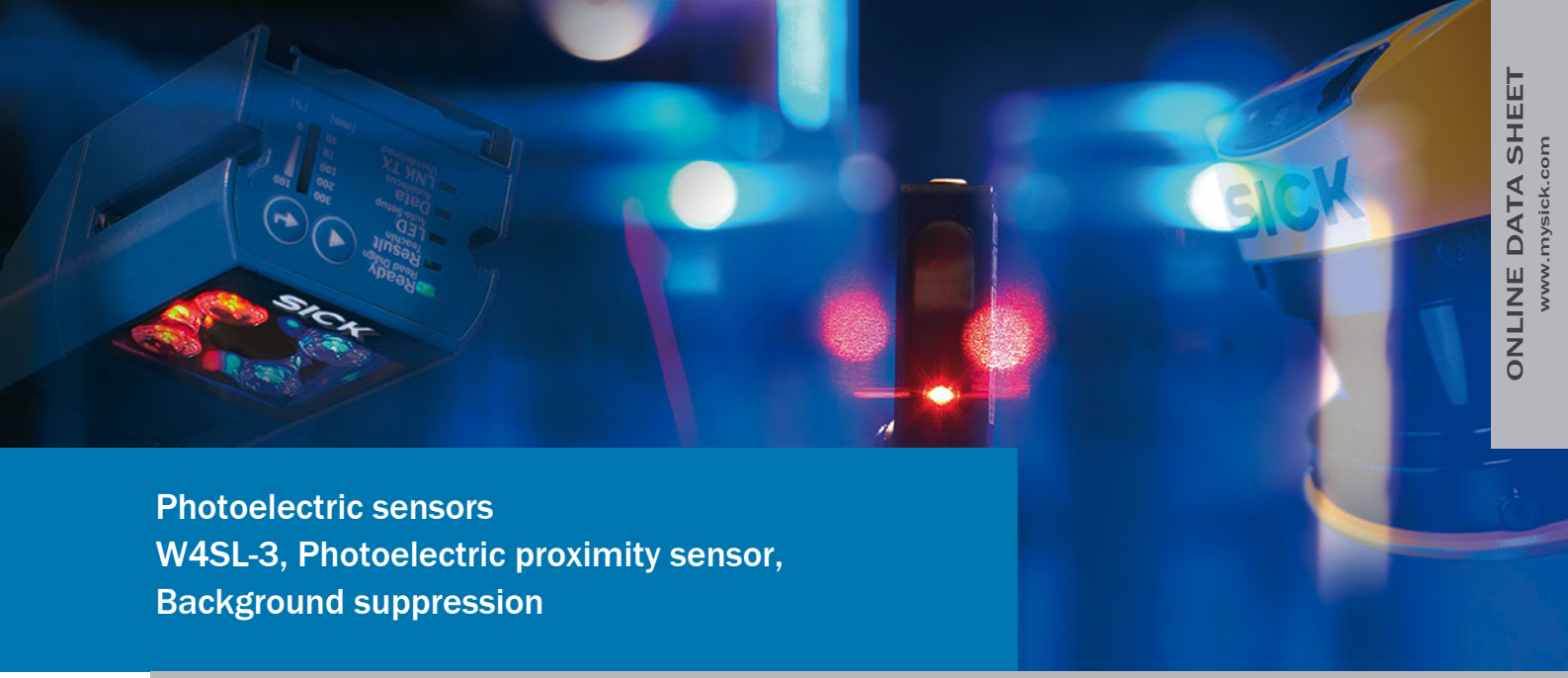

ONLINE DATA SHEET
www.mysick.com

Photoelectric sensors
W4SL-3, Photoelectric proximity sensor, Background suppression

WTB4SL-3P3261



SICK
Sensor Intelligence.

Photoelectric sensors
W4SL-3, Photoelectric proximity sensor, Background suppression

Type > WTB4SL-3P3261
Part No. > 1058238





Illustration may differ

At a glance

- Precise laser light spot, laser class 1
- Latest SICK proprietary ASIC and laser technologies with second emitter LED to provide outstanding background suppression and ambient light immunity
- Sensing range between 25 and 300 mm
- Established and proven housing design
- High-quality sensor manufacturing and testing for mechanical ruggedness
- Choice of adjustment via teach-in button, 5-turn potentiometer, or cable

Your benefits

- Precise laser light spot for highly accurate switching behavior
- High optical ambient light immunity reduces incorrect switching and thus machine downtime, even when modern energy-saving lamps are used
- High-quality sensor manufacturing and testing reduce maintenance costs
- The highest degree of machine design flexibility and outstanding BGS (background suppression) minimizes the effect of background reflections
- Established and proven housing design for easy installation

Features

Sensor/detection principle:	Photoelectric proximity sensor, Background suppression
Dimensions (W x H x D):	12.2 mm x 41.8 mm x 17.3 mm
Housing design (light emission):	Rectangular
Mounting hole:	M3
Sensing range max.:	25 mm ... 300 mm [1)]
Sensing range:	25 mm ... 300 mm [2)]
Type of light:	Visible red light
Light source:	Laser [3)]
Laser class:	1, 1 (EN60825-1:2008-05 & IEC 60825-1:2007-03/CDRH 21 CFR 1040.10 & 1040.11)
Wave length:	650 nm
Adjustment:	Potentiometer, 5 turns
Light spot size (distance):	Ø 1 mm (170 mm)

[1)] [2)] Object with 90 % reflectance (referred to standard white, DIN 5033) [3)] Average service life 50,000 h at T_A = +25 °C

Mechanics/electronics

© SICK AG. Subject to change without notice.

Supply voltage:	10 V DC ... 30 V DC [1]
Ripple:	< 5 Vpp [2]
Power consumption:	≤ 30 mA [3]
Output type:	PNP [4]
Output function:	Complementary
Switching mode:	Light/dark switching [5]
Output current Imax.:	≤ 100 mA
Response time:	≤ 0.5 ms [6]
Switching frequency:	1,000 Hz [7]
Connection type:	Cable with connector M8, 4-pin, 120 mm [8]
Cable material:	PVC
Conductor cross-section:	0.14 mm²
Circuit protection:::	A, B, C [9] [10] [11]
Protection class:	III
Weight:	100 g
Optics material:	PMMA
Enclosure rating:	IP 66 IP 67
Ambient operating temperature:	-10 °C ... +50 °C
Ambient storage temperature:	-30 °C ... +70 °C
Ambient operating temperature extended::	-30 °C ... +55 °C [12] [13]
Housing material:	Plastic, Bayblend

[1] Limit values, operation in short-circuit protected network max. 8 A [2] May not exceed or fall short of V_S tolerances [3] Without load [4] [5] Q = light switching [6] Signal transit time with resistive load [7] With light/dark ratio 1:1 [8] Do not bend below 0 °C [9] A = V_S connections reverse-polarity protected [10] B = inputs and output reverse-polarity protected [11] C = interference suppression [12] As of T_a = 50 °C, a max. supply voltage $V_{max.}$ = 24 V and a max. load current $I_{max.}$ = 50 mA is permitted [13] Using the sensor below T_a = -10 °C is possible, if the sensor is turned on at T_a > -10 °C, then the environment cools down and the sensor is not disconnected from the supply voltage during the whole time. It is not allowed to turn on the sensor below T_a = -10 °C

© SICK AG. Subject to change without notice.

Dimensional drawing

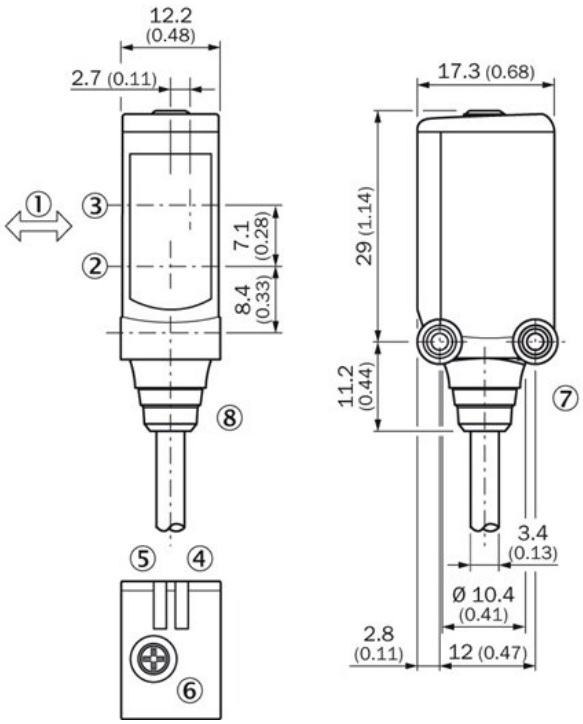

|1| Standard direction of the material being detected
|2| Center of optical axis, sender
|3| Center of optical axis, receiver
|4| Status indicator LED green: supply voltage on
|5| Status indicator LED,
yellow: Status of received light beam
|6| Potentiometer
|7| Threaded mounting hole M3
|8| Connection

Connection diagram

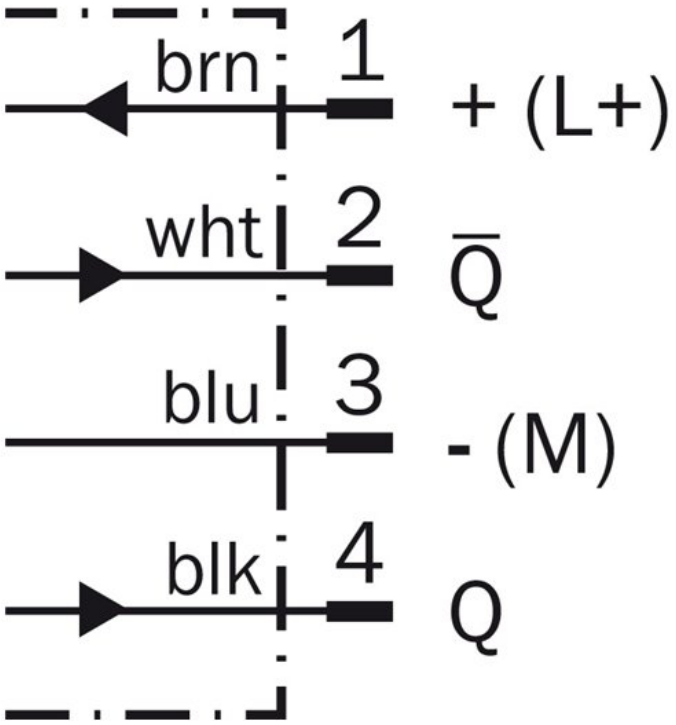

© SICK AG. Subject to change without notice.

Characteristic curve

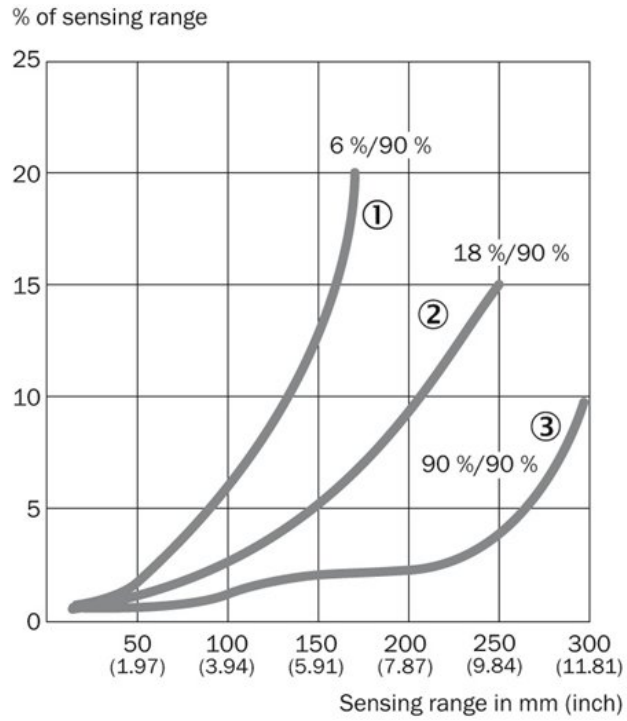

|1| Sensing range on black, 6 % remission
|2| Sensing range on gray, 18 % remission
|3| Sensing range on white, 90 % remission

Light spot size

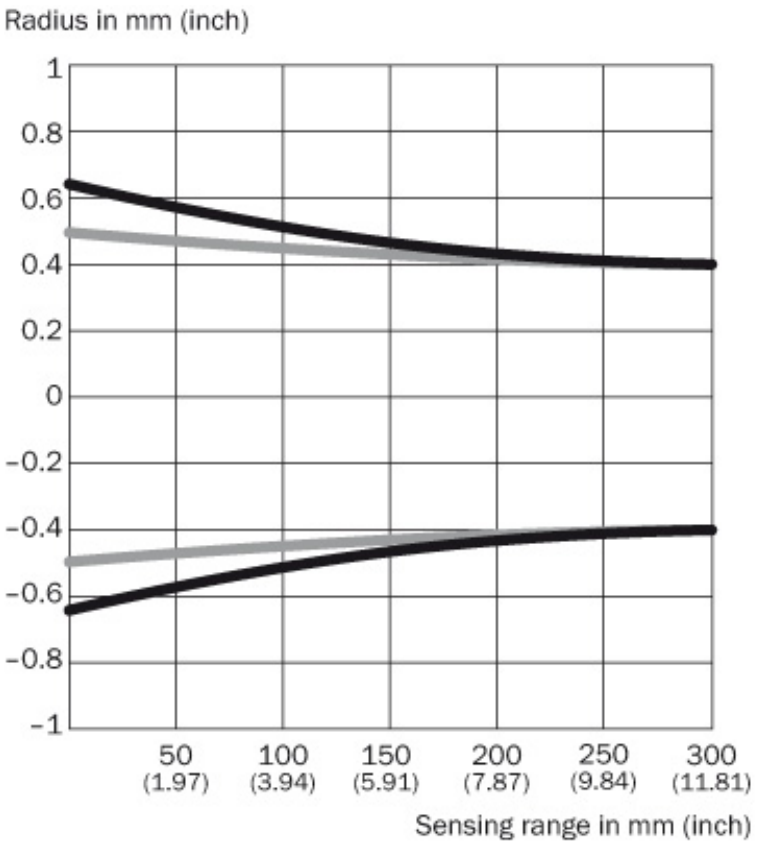

Dimensions in mm (inch)

Sensing range	Vertical	Horizontal
50 mm (1.97)	1.2 (0.05)	1.0 (0.04)
100 mm (3.94)	1.1 (0.04)	1.0 (0.04)
200 mm (7.87)	0.9 (0.04)	0.9 (0.04)
300 mm (11.81)	0.8 (0.03)	0.8 (0.03)

© SICK AG. Subject to change without notice.

Sensing range diagram

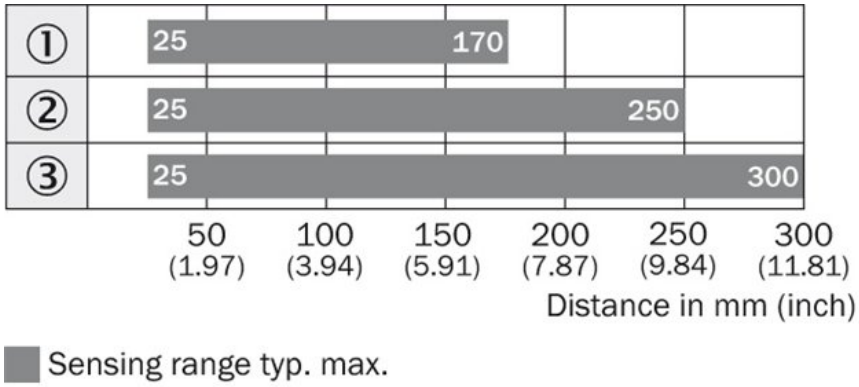

|1| Sensing range on black, 6 % remission
|2| Sensing range on gray, 18 % remission
|3| Sensing range on white, 90 % remission

Sensing range typ. max.

© SICK AG. Subject to change without notice.

A4 4c int43

Australia
Phone +61 3 9457 0600
1800 33 48 02 – tollfree
E-Mail sales@sick.com.au

Belgium/Luxembourg
Phone +32 (0)2 466 55 66
E-Mail info@sick.be

Brasil
Phone +55 11 3215-4900
E-Mail marketing@sick.com.br

Canada
Phone +1 905 771 14 44
E-Mail information@sick.com

Česká republika
Phone +420 2 57 91 18 50
E-Mail sick@sick.cz

China
Phone +86 4000 121 000
E-Mail info.china@sick.net.cn
Phone +852-2153 6300
E-Mail ghk@sick.com.hk

Danmark
Phone +45 45 82 64 00
E-Mail sick@sick.dk

Deutschland
Phone +49 211 5301-301
E-Mail info@sick.de

España
Phone +34 93 480 31 00
E-Mail info@sick.es

France
Phone +33 1 64 62 35 00
E-Mail info@sick.fr

Great Britain
Phone +44 (0)1727 831121
E-Mail info@sick.co.uk

India
Phone +91–22–4033 8333
E-Mail info@sick-india.com

Israel
Phone +972-4-6881000
E-Mail info@sick-sensors.com

Italia
Phone +39 02 27 43 41
E-Mail info@sick.it

Japan
Phone +81 (0)3 5309 2112
E-Mail support@sick.jp

Magyarország
Phone +36 1 371 2680
E-Mail office@sick.hu

Nederland
Phone +31 (0)30 229 25 44
E-Mail info@sick.nl

Norge
Phone +47 67 81 50 00
E-Mail sick@sick.no

Österreich
Phone +43 (0)22 36 62 28 8-0
E-Mail office@sick.at

Polska
Phone +48 22 837 40 50
E-Mail info@sick.pl

România
Phone +40 356 171 120
E-Mail office@sick.ro

Russia
Phone +7-495-775-05-30
E-Mail info@sick.ru

Schweiz
Phone +41 41 619 29 39
E-Mail contact@sick.ch

Singapore
Phone +65 6744 3732
E-Mail sales.gsg@sick.com

Slovenija
Phone +386 (0)1-47 69 990
E-Mail office@sick.si

South Africa
Phone +27 11 472 3733
E-Mail info@sickautomation.co.za

South Korea
Phone +82 2 786 6321/4
E-Mail info@sickkorea.net

Suomi
Phone +358-9-25 15 800
E-Mail sick@sick.fi

Sverige
Phone +46 10 110 10 00
E-Mail info@sick.se

Taiwan
Phone +886 2 2375-6288
E-Mail sales@sick.com.tw

Türkiye
Phone +90 (216) 528 50 00
E-Mail info@sick.com.tr

United Arab Emirates
Phone +971 (0) 4 88 65 878
E-Mail info@sick.ae

USA/México
Phone +1(952) 941-6780
1 (800) 325-7425 – tollfree
E-Mail info@sickusa.com

More representatives and agencies
at **www.sick.com**

SICK
Sensor Intelligence.