

ONLINE DATA SHEET
www.mysick.com

Photoelectric sensors
W2S-2, Photoelectric proximity sensor, Background suppression

WTB2S-2P3230



SICK
Sensor Intelligence.

SICK
Sensor Intelligence.

Photoelectric sensors
W2S-2, Photoelectric proximity sensor, Background suppression

Type > WTB2S-2P3230
Part No. > 1063517





Illustration may differ

At a glance

- Sensing ranges of up to 150 mm
- Almost no black/white shift up to 60 mm
- Sensor with line-shaped light spot
- Sensor with laser-like focused light spots
- Precise background suppression that is immune to interference/crosstalk
- High-performance PinPoint 2.0 LED

Your benefits

- An ultra-compact design with the performance of large photoelectric proximity sensors offers new space-saving machine construction possibilities.
- Large variety of proximity sensors and operating concepts enable a wide range of application options
- Use in confined spaces: detection of small, flat parts thanks to high-quality background suppression and almost nonexistent black/white shift
- Remote access: models with IO-Link allow data to be easily accessed from the PLC
- High availability and long-term use in grippers thanks to flexible and rugged cable entry

Features

Sensor/detection principle:	Photoelectric proximity sensor, Background suppression
Dimensions (W x H x D):	7.7 mm x 21.8 mm x 13.5 mm
Housing design (light emission):	Rectangular
Sensing range max.:	1 mm ... 36 mm [1)]
Sensing range:	3 mm ... 30 mm [2)]
Type of light:	Visible red light
Light source:	PinPoint LED [3)]
Wave length:	640 nm
Light spot size (distance):	X Ø 3 mm (15 mm)
Background suppression typ. from:	38 mm

[1)] [2)] Object with 90 % reflectance (referred to standard white, DIN 5033) [3)] Average service life: 100,000 h at T_U = +25 °C

Mechanics/electronics

Supply voltage:	10 V DC ... 30 V DC [1)]
Ripple:	≤ 5 Vpp [2)]
Current consumption:	≤ 20 mA [3)]

© SICK AG. Subject to change without notice.

Output type:	PNP
Switching mode:	Light/dark switching
Output current Imax.:	< 50 mA
Response time:	< 0.4 ms [4]
Switching frequency:	1,200 Hz [5]
Connection type:	Cable with M8 male connector, 4-pin, 200 mm [6]
Cable material:	PVC
Cable diameter:	Ø 3 mm
Circuit protection:::	A, B, D [7] [8] [9]
IO-Link:	-
Special device:	-
Optics material:	PMMA
Enclosure rating:	IP 67
Ambient operating temperature:	-25 °C ... +50 °C
Ambient storage temperature:	-40 °C ... +75 °C
UL File No.:	NRKH.E181493
Housing material:	ABS/PC, Plastic

[1] Limit values [2] May not exceed or fall below U_V tolerances [3] Without load [4] Signal transit time with resistive load [5] With light/dark ratio 1:1 [6] Do not bend below 0 °C [7] A = V_S connections reverse-polarity protected [8] B = output reverse-polarity protected [9] D = outputs overcurrent and short-circuit protected

Dimensional drawing

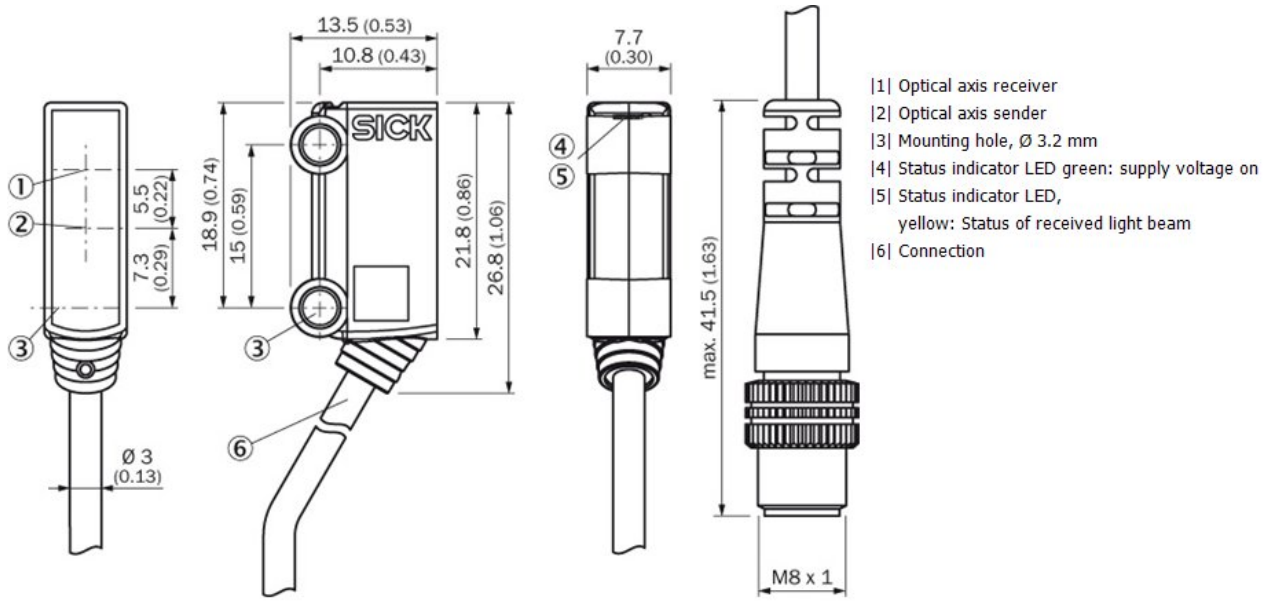

© SICK AG. Subject to change without notice.

Connection diagram

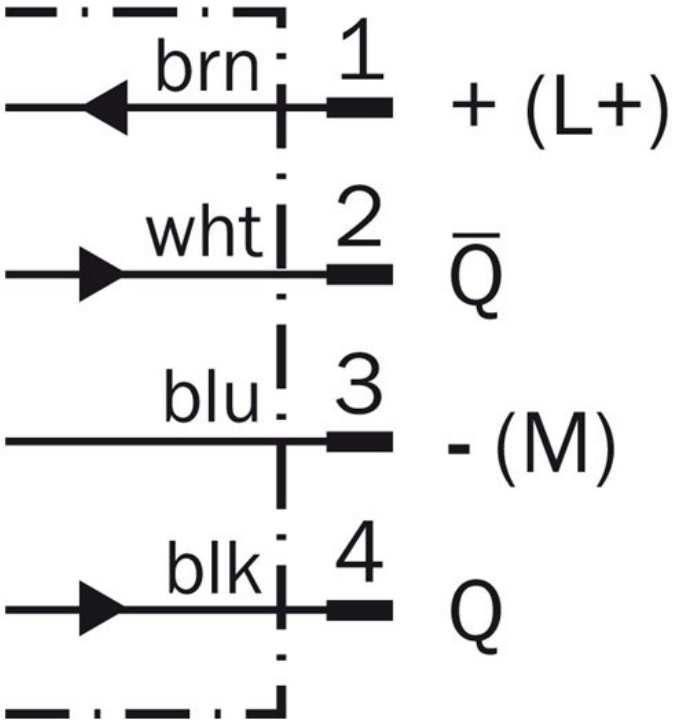

Light spot size

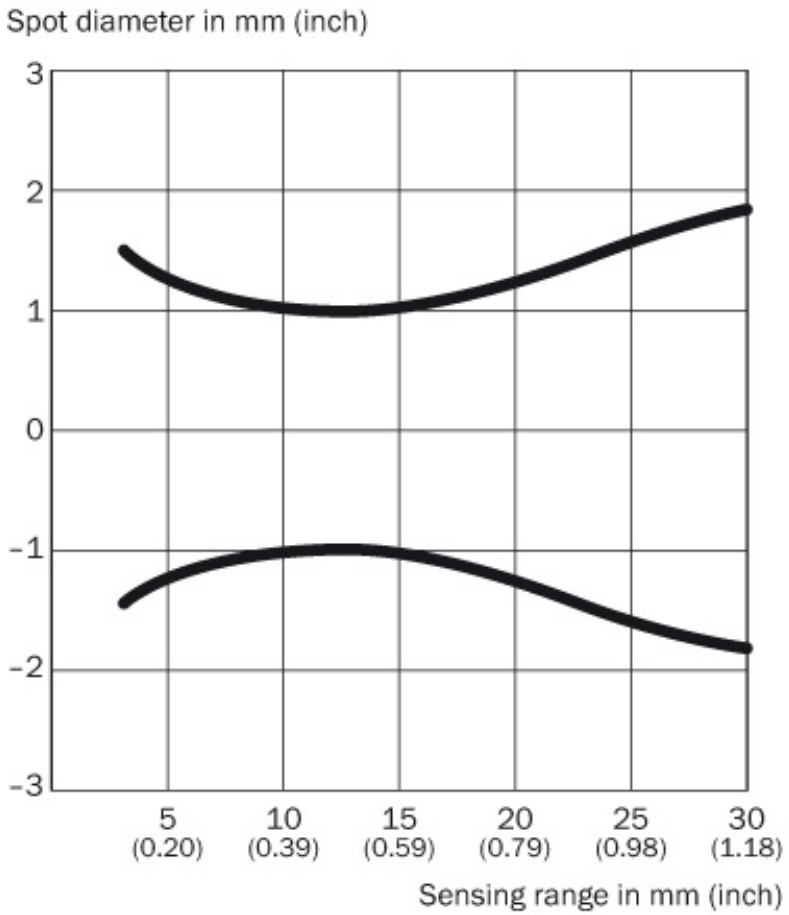

Dimensions in mm (inch)

Sensing range	Spot diameter
10 **(0.39)**	3.2 (0.13)
15 **(0.59)**	3.0 (0.12)
20 **(0.79)**	3.8 (0.15)
30 **(1.18)**	5.0 (0.20)

© SICK AG. Subject to change without notice.

Sensing range diagram

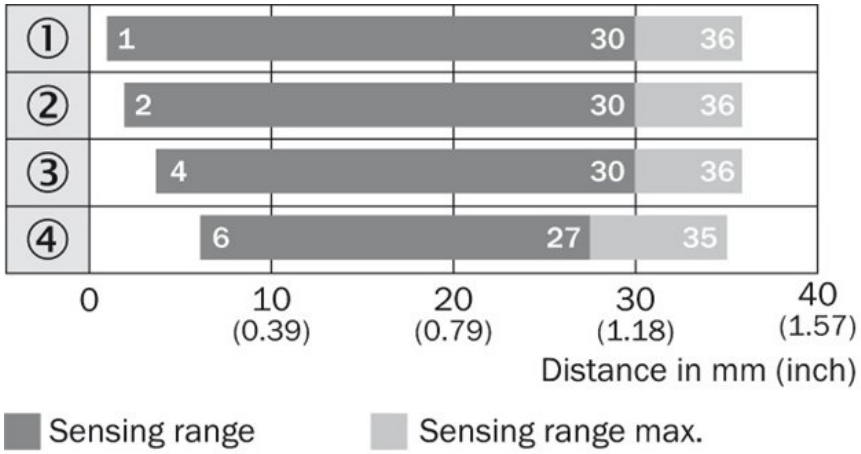

|1| Sensing range on white, 90 % remission
|2| Sensing range on gray, 18 % remission
|3| Sensing range on black, 6 % remission
|4| Sensing range on ultrablack, 1 % remission

© SICK AG. Subject to change without notice.

A4 4c int43

Australia
Phone +61 3 9457 0600
1800 33 48 02 – tollfree
E-Mail sales@sick.com.au

Belgium/Luxembourg
Phone +32 (0)2 466 55 66
E-Mail info@sick.be

Brasil
Phone +55 11 3215-4900
E-Mail marketing@sick.com.br

Canada
Phone +1 905 771 14 44
E-Mail information@sick.com

Česká republika
Phone +420 2 57 91 18 50
E-Mail sick@sick.cz

China
Phone +86 4000 121 000
E-Mail info.china@sick.net.cn
Phone +852-2153 6300
E-Mail ghk@sick.com.hk

Danmark
Phone +45 45 82 64 00
E-Mail sick@sick.dk

Deutschland
Phone +49 211 5301-301
E-Mail info@sick.de

España
Phone +34 93 480 31 00
E-Mail info@sick.es

France
Phone +33 1 64 62 35 00
E-Mail info@sick.fr

Great Britain
Phone +44 (0)1727 831121
E-Mail info@sick.co.uk

India
Phone +91–22–4033 8333
E-Mail info@sick-india.com

Israel
Phone +972-4-6881000
E-Mail info@sick-sensors.com

Italia
Phone +39 02 27 43 41
E-Mail info@sick.it

Japan
Phone +81 (0)3 5309 2112
E-Mail support@sick.jp

Magyarország
Phone +36 1 371 2680
E-Mail office@sick.hu

Nederland
Phone +31 (0)30 229 25 44
E-Mail info@sick.nl

Norge
Phone +47 67 81 50 00
E-Mail sick@sick.no

Österreich
Phone +43 (0)22 36 62 28 8-0
E-Mail office@sick.at

Polska
Phone +48 22 837 40 50
E-Mail info@sick.pl

România
Phone +40 356 171 120
E-Mail office@sick.ro

Russia
Phone +7-495-775-05-30
E-Mail info@sick.ru

Schweiz
Phone +41 41 619 29 39
E-Mail contact@sick.ch

Singapore
Phone +65 6744 3732
E-Mail sales.gsg@sick.com

Slovenija
Phone +386 (0)1-47 69 990
E-Mail office@sick.si

South Africa
Phone +27 11 472 3733
E-Mail info@sickautomation.co.za

South Korea
Phone +82 2 786 6321/4
E-Mail info@sickkorea.net

Suomi
Phone +358-9-25 15 800
E-Mail sick@sick.fi

Sverige
Phone +46 10 110 10 00
E-Mail info@sick.se

Taiwan
Phone +886 2 2375-6288
E-Mail sales@sick.com.tw

Türkiye
Phone +90 (216) 528 50 00
E-Mail info@sick.com.tr

United Arab Emirates
Phone +971 (0) 4 88 65 878
E-Mail info@sick.ae

USA/México
Phone +1(952) 941-6780
1 (800) 325-7425 – tollfree
E-Mail info@sickusa.com

More representatives and agencies
at **www.sick.com**

SICK
Sensor Intelligence.