# WT32i BLUETOOTH AUDIO MODULE

DATA SHEET

Monday, 18 March 2019

Version 1.3.1

Not Recommended for New Designs

SILICON LABS

## VERSION HISTORY

| VERSION | COMMENT |
|---|---|
| 1.0 | First version |
| 1.1 | Added example how to protect the battery by shutting down the regulators at certain voltage level |
| 1.2 | Fixed PCM pin numbering |
| 1.21 | Design check list added |
| 1.22 | UART brake signal updated |
| 1.23 | Chapter 9.3.1 added |
| 1.24 | Added note to reset section |
| 1.3 | Updated order codes and added more information about iWRAP versions. |
| 1.3.1 | Fixed one wrong build number |

Not Recommended for New Designs

## TABLE OF CONTENTS


1 Design Check List ..... 6
2 WT32i Product Numbering ..... 7
3 Block diagram ..... 8
4 Pinout and Terminal Description ..... 9
5 Electrical Characteristics ..... 12
5.1 Absolute Maximum Ratings ..... 12
5.2 Recommended Operating Conditions ..... 12
5.3 Digital Terminals ..... 12
5.4 Audio Characteristics ..... 13
5.4.1 ADC ..... 13
5.4.2 DAC ..... 14
5.4.3 A2DP Codecs ..... 14
5.5 RF Characteristics ..... 16
5.5.1 RF Transceiver ..... 16
5.5.2 Antenna Characteristics ..... 17
5.6 Current Consumption ..... 20
6 Power Control and Regulation ..... 21
6.1 Protecting the Battery by Configuring the Module to Turn Off at Certain Voltage ..... 23
6.2 Reset ..... 24
6.2.1 Internal POR ..... 24
7 Battery Charger ..... 26
8 GPIO and AIO Functions ..... 27
8.1 iWRAP supported GPIO Functions ..... 27
8.2 Outputting Internal Clocks ..... 27
8.3 Auxiliary ADC ..... 28
8.4 Software I2C Interface ..... 28
9 Serial Interfaces ..... 29
9.1 UART Interface ..... 29
9.1.1 Resetting Through UART Break Signal ..... 30
9.1.2 UART Configuration While Reset is Active ..... 30
9.1.3 UART Bypass Mode ..... 30
9.2 USB Interface ..... 31
9.3 Programming and Debug Interface (SPI) ..... 32
9.3.1 Multi-slave Operation ..... 32
10 Audio Interfaces ..... 33
10.1 Stereo Audio Codec Interface ..... 33
10.1.1 ADC ..... 33


Not Recommended for New Designs

10.1.2 DAC ... 35
10.1.3 Microphone Input ... 36
10.1.4 Line Input ... 37
10.1.5 Output Stage ... 38
10.1.6 Mono Operation ... 40
10.1.7 Side Tone ... 40
10.2 PCM Interface ... 40
10.3 I2S Interface ... 40
10.4 IEC 60958 Interface ... 42
11 Design Guidelines ... 44
11.1 Audio Layout Guide ... 44
11.1.1 EMC Considerations ... 44
11.1.2 Choosing Capacitors and Resistors ... 44
11.2 RF Layout Guide ... 45
11.3 Example Application Schematics ... 48
12 Physical Dimensions ... 52
13 Soldering Recommendations ... 54
14 Package ... 55
15 Certification Guidance for an End Product Using WT32i ... 57
15.1 Bluetooth End Product Listing ... 57
15.2 CE Approval of an End-Product ... 57
15.3 FCC Certification of an End Product ... 58
15.3.1 Co-location with Other Transmitters ... 59
15.4 IC Certification of an End Product ... 59
15.5 MIC Japan Certification of an End Product ... 59
16 WT32i Certifications ... 59
16.1 Bluetooth ... 59
16.2 CE ... 59
16.3 FCC ... 60
16.4 IC ... 61
16.4.1 IC ... 61
16.5 MIC Japan ... 62
16.6 KCC (South-Korea) ... 62
16.7 Qualified Antenna Types for WT32i-E ... 62

Not Recommended for New Designs

# WT32i *Bluetooth*® Audio Module

## DESCRIPTION

WT32i is an audio specific *Bluetooth* 3.0 module with excellent radio frequency performance and enhanced audio features, enabling a best in class *Bluetooth* audio experience. In addition to a certified *Bluetooth* radio and software stack, WT32i also contains a DSP, stereo audio codec, and battery charger making it ideal for fixed and portable audio applications. WT32i includes Bluegiga's iWRAP6 *Bluetooth* stack software which implements A2DP, AVRCP v.1.5 profiles and supports aptX® and AAC audio codecs for stereo audio applications. For hands-free applications iWRAP6 software also supports HFP v.1.6, HSP, MAP and PBAP and CVC® echo cancellation software. For data communications to Android and iOS applications iWRAP6 also implements *Bluetooth* Serial Port Profile (SPP) and Apple iAP profiles. WT32i is an ideal solution for developers who want to quickly integrate the latest *Bluetooth* audio technologies without the time and costs typically involved with a *Bluetooth* audio chipset design.

## APPLICATIONS:

- Stereo speakers and sound bars
- Hi-Fi devices
- Hands-free kits
- Stereo headsets




**Figure 1: WT32i Bluetooth Audio Module**

## KEY FEATURES:

- *Bluetooth* 3.0 compliant
- Excellent Radio Performance
  - Transmit power: +6.5 dBm
  - Receiver sensitivity: -90 dBm
  - Link budget: 96.5 dB
- Integrated chip antenna or U.FL antenna connector
- Audio features
  - Integrated DSP
  - 16-bit stereo codec
  - 44.1kHz ADC, 48kHz DAC
  - Analog, I2S, PCM, SPDIF, and microphone interfaces
  - Optional aptX® and AAC stereo audio codecs
  - Optional CVC® echo cancellation
  - Wide Band Speech
- Built-in battery charger
- UART host interface
- 802.11 co-existence interface
- 10 software programmable IO pins
- Operating voltage: 1.8V to 3.6V
- Temperature range: -40C to +85C
- *Bluetooth*, CE, FCC, IC, Korea and Japan qualified
- Integrated iWRAP6 *Bluetooth* stack
  - 13 *Bluetooth* profiles
  - Apple iAP1 and iAP2 compatibility

Not Recommended for New Designs

# 1 Design Check List

## POWERING THE MODULE

- Make sure that VRE_ENA is connected correctly
- Use iWRAP command SET CONTROL VREGEN command to configure the VREG_ENA pin according to the HW

- Reserve test points for SPI interface for debugging and FW updates

- The internal power on reset does not work properly if the host pulls the reset line low during boot. To prevent this, place a diode to the reset input.

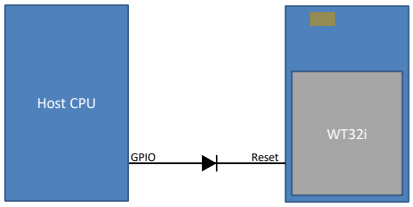


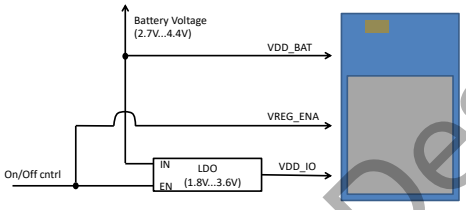


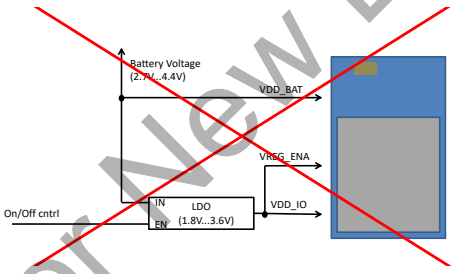


## RF LAYOUT

- Make sure that the layout for the antenna is done as instrcucted.

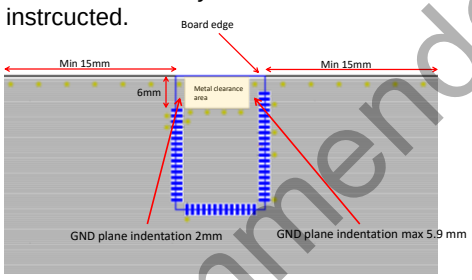


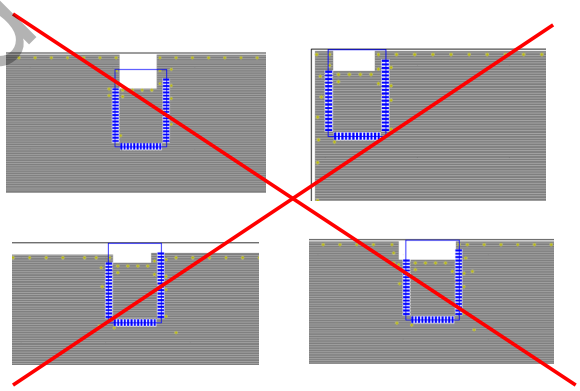

## AUDIO DESIGN AND LAYOUT

- See the example schematics on pages 49 -52
- Avoid using single ended audio traces. Always use differential audio signaling when possible
- Use solid GND plane and make sure that all the GND pins are connected to it by placing a GND via right next to any GND pins.

- When routing single ended audio traces, make sure that the return current (i.e. GND) follows the traces all the way from start to the end

- DO NOT COMPROMISE AUDIO ROUTING

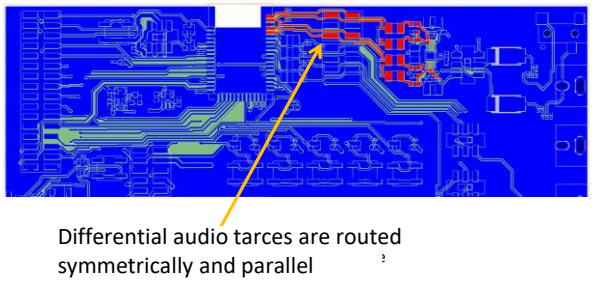


Not Recommended for New Designs

# 2 WT32i Product Numbering

| Product code | Description |
|---|---|
| WT32i-A-AI61 | WT32i Bluetooth Module with internal chip antenna and iWRAP 6.1.0 (build 1022) *Bluetooth* software |
| WT32i-A-AI61-APTX | WT32i Bluetooth Module with internal chip antenna and aptX® audio codec capable iWRAP 6.1.0 (build 1024) *Bluetooth* software. |
| WT32i-A-AI61IAP | WT32i Bluetooth Module with internal chip antenna and Apple iAP capable iWRAP 6.1.0 (build 1055) *Bluetooth* software. Available only to Apple MFI licensees. Contact www.silabs.com/about-us/contact-sales for more information. |
| WT32i-E-AI61 | WT32i Bluetooth Module with U.FL connector and iWRAP 6.1.0 (build 1022) *Bluetooth* software |
| WT32i-E-AI61-APTX | WT32i Bluetooth Module with U.FL connector and aptX® audio codec capable iWRAP 6.1.0 (build 1024) *Bluetooth* software. |
| WT32i-E-AI61IAP | WT32i Bluetooth Module with U.FL connector and Apple iAP capable iWRAP 6.1.0 (build 1055) *Bluetooth* software. Available only to Apple MFI licensees. Contact www.silabs.com/about-us/contact-sales for more information. |
| DKWT32i-A | WT32i development kit |

Not Recommended for New Designs

# 3 Block diagram

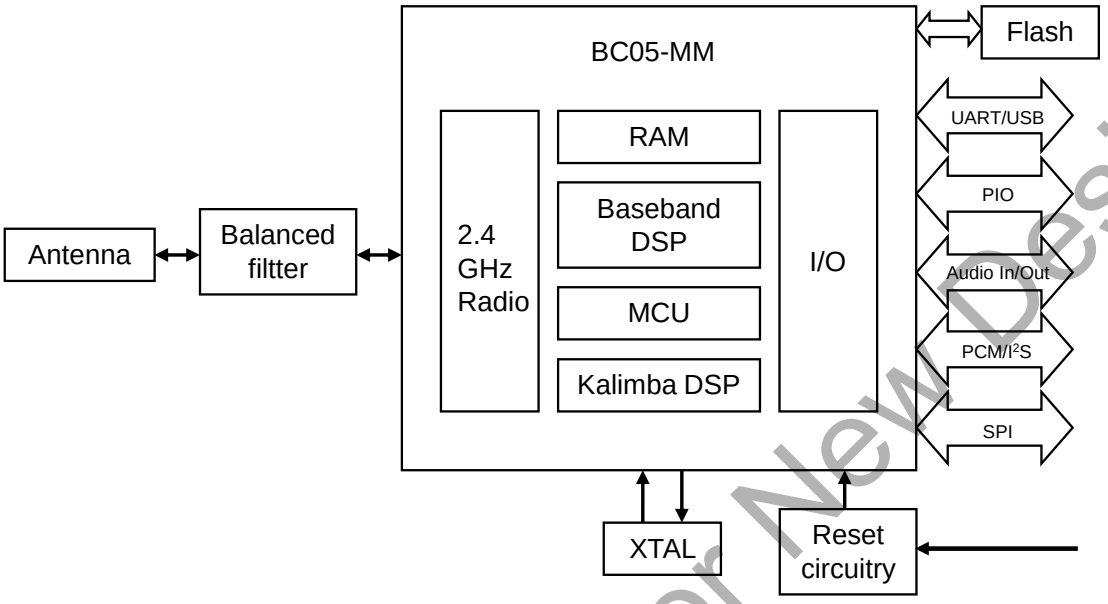


**Figure 2: Block Diagram of WT32i**

**BC05-MM**

The BlueCore®5-Multimedia External is a single-chip radio and baseband IC for Bluetooth 2.4GHz systems. It provides a fully compliant Bluetooth v3.0 specification system for data and voice. BlueCore5-Multimedia External contains the Kalimba DSP coprocessor with double the MIPS of BlueCore3-Multimedia External, supporting enhanced audio applications.

**XTAL**

Ther reference clock of WT32i is generated with 26 MHz crystal. All BC05-MM internal digital clocks are generated using a phase locked loop, which is locked to the frequency of either the 26 MHz crystal or an internally generated watchdog clock frequency of 1kHz.

**RESET CIRCUITRY**

The internal reset circuitry keeps BC05-MM in reset during boot in order for the supply voltages to stabilize. This is to prevent corruption of the flash memory during booting. Please see chapter 6.1 for more detailed description.

**BALANCED FILTER**

The internal balanced filter provides optimal impedance matching and band pass filtering in order to achieve lowest possible in-band and out-of-band emissions.

**ANTENNA**

The antenna is a ceramic chip antenna with high efficiency. The antenna is insensitive to surrounding dielectric materials and requires only a small clearance underneath which makes it compatible with previous WT32I designs and well suitable for designs with high density.

**FLASH**

16 Mbit flash memory is used for storing the Bluetooth protocol stack and Virtual Machine applications. It can also be used as an optional external RAM for memory-intensive applications.

Not Recommended for New Designs

# 4 Pinout and Terminal Description

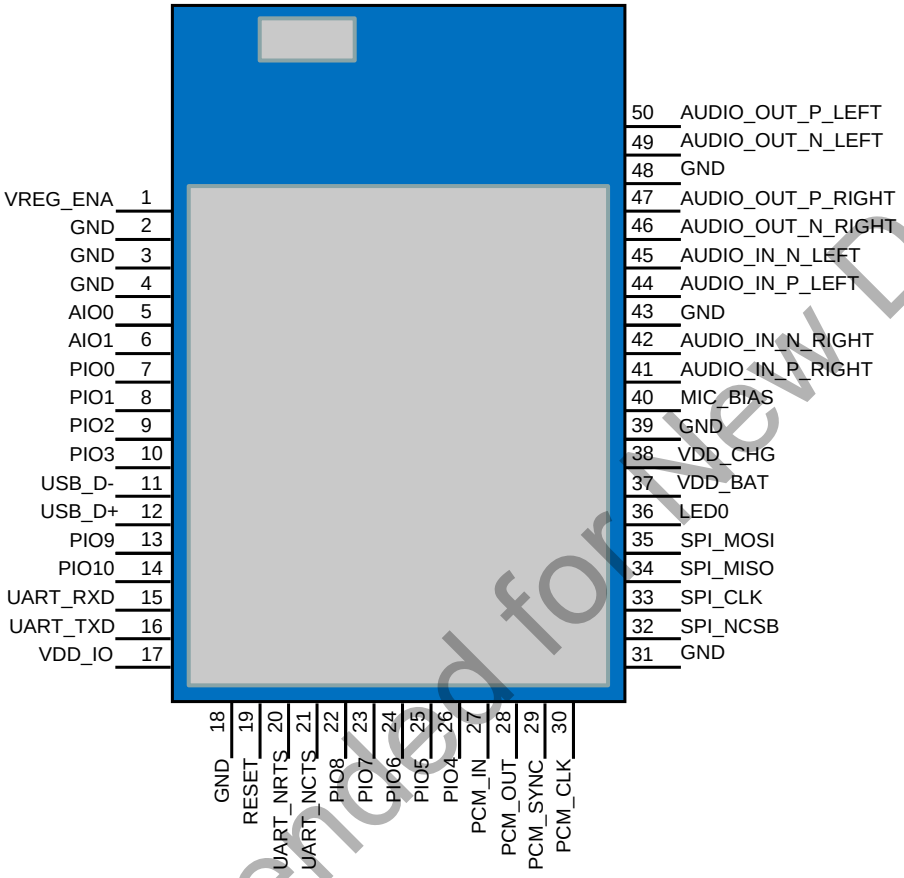


**Figure 3: WT32i**

| Pin Number | Pin Name | Pad Type | Description |
|---|---|---|---|
| 1 | VREG_ENA | Input | SW configurable enable pin for the internal regulators |
| 2-4, 18, 31, 39, 43, 48 | GND | GND | GND |
| 17 | VDD_IO | Power supply | 1.7V - 3.6V power supply for the serial interfaces and GPIOs |
| 37 | VDD_BAT | Power supply / Charger output | 2.7V - 4.4V supply voltage for the internal regulators and output of the battery charger |
| 38 | VDD_CHG | Power supply | Nominal 5V supply voltage for the battery charger |

**Table 1: Supply Terminal Descriptions**

Not Recommended for New Designs

| Pin Number | Pin Name | Pin Type | Description |
|---|---|---|---|
| 19 | RESET | RESET | Active high reset. If not used, leave floating. When connected, make sure that the reset is either pulled high or floating (connected to high impedance) during boot. |
| | | | |
| 5 | AIO0 | Configurable I/O | AIO0 and AIO1 can be used to read the voltage level through the internal ADC (refer to iWRAP User Guide for details). AIO pins can also be configured to be used as general digital IO pins through PS settings. Internal clocks can be routed out through AIO pins by setting corresponding PS settings. Note that the AIO pins are powered from internal 1.5V supply so the maximum voltage level of the AIO pins is 1.5V. |
| 6 | AIO1 | | |
| | | | |
| 7 | PIO0 | Configurable CMOS I/O | General purpose IO's can be configured with iWRAP for various functions. Each IO can be configured individually as output or input with strong or weak pull-up/-down. Using particular PS setting GPIO pins can be used to implement WiFi co-existence signaling between WT32i and a WiFi radio. Software I2C interface can be implemented for slow I2C functions such as configuring external audio codec or display. |
| 8 | PIO1 | | |
| 9 | PIO2 | | |
| 10 | PIO3 | | |
| 13 | PIO9 | | |
| 14 | PIO10 | | |
| 22 | PIO8 | | |
| 23 | PIO7 | | |
| 24 | PIO6 | | |
| 25 | PIO5 | | |
| 26 | PIO4 | | |
| | | | |
| 11 | USB_D- | I/O | USB data minus |
| 12 | USB_D+ | I/O | USB data plus with selectable internal 1.5k pull-up resistor |
| | | | |
| 15 | UART_RXD | CMOS Input, weak internal pull-down | UART data input |
| 16 | UART_TXD | CMOS output, tristate, weak internal pull-up | UART data output |
| 20 | UART_NRTS | CMOS output, tristate, weak internal pull-up | UART request to send, active low |
| 21 | UART_NCTS | CMOS Input, weak internal pull-down | UART clear to send, active low |
| | | | |
| 32 | SPI_NCSB | CMOS Input, weak internal pull-down | SPI chip select |
| 33 | SPI_CLK | CMOS Input, weak internal pull-down | SPI clock |

Not Recommended for New Designs

| | | | |
|---|---|---|---|
| 34 | SPI_MISO | CMOS Input, weak internal pull-down | SPI data input |
| 35 | SPI_MOSI | CMOS output, tristate, weak internal pull-down | SPI data output |
| | | | |
| 36 | LED0 | Open drain output | LED driver |

**Table 2: Terminal Descriptions**

| Pin Number | Pin Name | Pin Type | Description |
|---|---|---|---|
| 40 | MIC_BIAS | Analog | |
| 41 | AUDIO_IN_P_RIGHT | Analog | |
| 42 | AUDIO_IN_N_RIGHT | Analog | |
| 44 | AUDIO_IN_P_LEFT | Analog | |
| 45 | AUDIO_IN_N_LEFT | Analog | |
| 46 | AUDIO_OUT_N_RIGHT | Analog | |
| 47 | AUDIO_OUT_P_RIGHT | Analog | |
| 49 | AUDIO_OUT_N_LEFT | Analog | |
| 50 | AUDIO_OUT_P_LEFT | Analog | |
| | | | |
| 27 | PCM_IN / I2S IN | CMOS input, weak internal pull-down | PCM or I2S data input |
| 28 | PCM_OUT / I2S_OUT | CMOS outptu, tristate, weak internal pull-down | PCM or I2S data output |
| 29 | PCM_SYNC / I2S_WS | Bidirectional, weak internal down | PCM sync or I2S word select. WT32i can operate as a PCM/I2S master providing the sync or as a slave receiving the sync |
| 30 | PCM_CLK / I2S_SCK | Bidirectional, weak internal down | PCM or I2S clock. WT32i can operate as a PCM/I2S master providing the clock or as a slave receiving the clock. |

**Table 3: Audio Terminal Descriptions**

Not Recommended for New Designs

# 5 Electrical Characteristics

## 5.1 Absolute Maximum Ratings

| | Min | Max | Unit |
|---|---|---|---|
| Storage temperature range | -40 | +85 | °C |
| Operating temperature range | -40 | +85 | °C |
| VDD_IO | -0.4 | 3.6 | V |
| VDD_BAT | -0.4 | 4.4 | V |
| VDD_CHG | -0.4 | 6.5 | V |
| Digital Terminal voltages | VSS - 0.4V | VDD + 0.4V | V |
| AIO voltages | VSS - 0.4V | 1.9V | V |

**Table 4: Absolute Maximum Ratings**

## 5.2 Recommended Operating Conditions

| | Min | Max | Unit |
|---|---|---|---|
| Storage temperature range | -40 | +85 | °C |
| Operating temperature range | -40 | +85 | °C |
| VDD_IO | 1.7 | 3.6 | V |
| VDD_BAT | 2.7 | 4.4 | V |
| VDD_CHG | 0 | 6.5 | V |
| Digital Terminal voltages | 0 | VDD | V |
| AIO voltages | 0 | 1.5V | V |

**Table 5: Recommended Operating Conditions**

## 5.3 Digital Terminals

| Input/Output Characteristic | Min | Max | Unit |
|---|---|---|---|
| $V_{IL}$ input logic level low | -0.3 | 0.25 x VDD | V |
| $V_{IL}$ input logic level high | 0.625 x VDD | VDD + 0.3 | V |
| $V_{OL}$ output logic level low, $I_{OL}$ = 4.0mA | 0 | 0.125 | V |
| $V_{OL}$ output logic level high, $I_{OL}$ = -4.0mA | 0.75 x VDD | VDD | V |
| Strong pull-up | -100 | -10 | µA |
| Strong pull-down | 10 | 100 | µA |
| Weak pull-up | -5 | -0.2 | µA |
| Weak pull-down | 0.2 | 5 | µA |

**Table 6: Digital Terminal Characteristics**

Not Recommended for New Designs

## 5.4 Audio Characteristics

### 5.4.1 ADC

| Parameter | Conditions | | Min | Typ | Max | Unit |
|---|---|---|---|---|---|---|
| Resolution | - | | - | - | 16 | Bits |
| Input Sample Rate, $F_{sample}$ | - | | 8 | - | 44.1 | kHz |
| Signal to Noise Ratio, SNR | | $F_{sample}$ | | | | |
| | | 8kHz | - | 79 | - | dB |
| | | 11.025kHz | - | 77 | - | dB |
| | | 16kHz | - | 76 | - | dB |
| | | 22.050kHz | - | 76 | - | dB |
| | | 32kHz | - | 75 | - | dB |
| | | 44.1kHz | - | 75 | - | dB |
| Input full scale at maximum gain (differential) | | | - | 4 | - | mV rms |
| Input full scale at minimum gain (differential) | | | - | 800 | - | mV rms |
| 3dB Bandwidth | | | - | 20 | - | kHz |
| Microphone mode input impedance | | | - | 6.0 | - | kHz |
| THD+N @ 30mV rms input | | | - | 0.04 | - | % |

**Table 7: ADC characteristics**

Not Recommended for New Designs

### 5.4.2 DAC

| Parameter | Conditions | | Min | Typ | Max | Unit |
|---|---|---|---|---|---|---|
| Resolution | - | | - | - | 16 | Bits |
| Output Sample Rate, $F_{sample}$ | - | | 8 | - | 48 | kHz |
| Signal to Noise Ratio, SNR | | $F_{sample}$ | | | | |
| | | 8kHz | - | 95 | - | dB |
| | | 11.025kHz | - | 95 | - | dB |
| | | 16kHz | - | 95 | - | dB |
| | | 22.050kHz | - | 95 | - | dB |
| | | 32kHz | - | 95 | - | dB |
| | | 44.1kHz | - | 95 | - | dB |
| Output Full Voltage Swing (differential) | | | - | 750 | - | mV rms |
| Allowed Load | Resistive | | 16 | - | O.C. | Ω |
| | Capacitive | | - | - | 500 | pF |
| THD+N 16Ω Load | | | - | - | 0.1 | % |
| THD+N 100Ω Load | | | - | - | 0.01 | % |

**Table 8: DAC Characteristics**

### 5.4.3 A2DP Codecs

#### 5.4.3.1 SBC

SBC codec is the default codec used for Bluetooth A2DP connections. Any Bluetooth device supporting A2DP audio profile supports SBC codec. SBC was originally design to provide reasonable good audio quality while keeping low computational complexity. SBC does not require high bit rates. Thus it works sufficiently with Bluetooth where the bandwidth and the processing power are limited.

#### 5.4.3.2 aptX®

The aptX is widely used in high quality audio devices. aptX can provide dynamic range up to 120 dB and it has the shortest coding delay (<2ms) than other coding algorithms. Using aptX® the whole system latency can be reduced significantly because unlike SBC, it does not require buffering the audio. SBC reproduces a limited audio band width whereas aptX® encode the entire frequency range of audio.

aptX® is more robust and resilient coding scheme than SBC and thus re-transmits does not occur as with SBC.

Both SBC and aptX® have flat frequency response up to 14 kHz. Up to 14 kHz both algorithms produce good quality audio with very little distortion. At frequencies higher than 14 kHz the benefit of aptX® becomes obvious. SBC exhibits increasing attenuation with increasing frequency but aptX® retains high reproduction quality.

aptX® requires purchasing a license for each Bluetooth address and the license agreement must be done with CSR. The combination of aptX® license and the Bluetooth address is programmed into the module in the module production line.

Not Recommended for New Designs

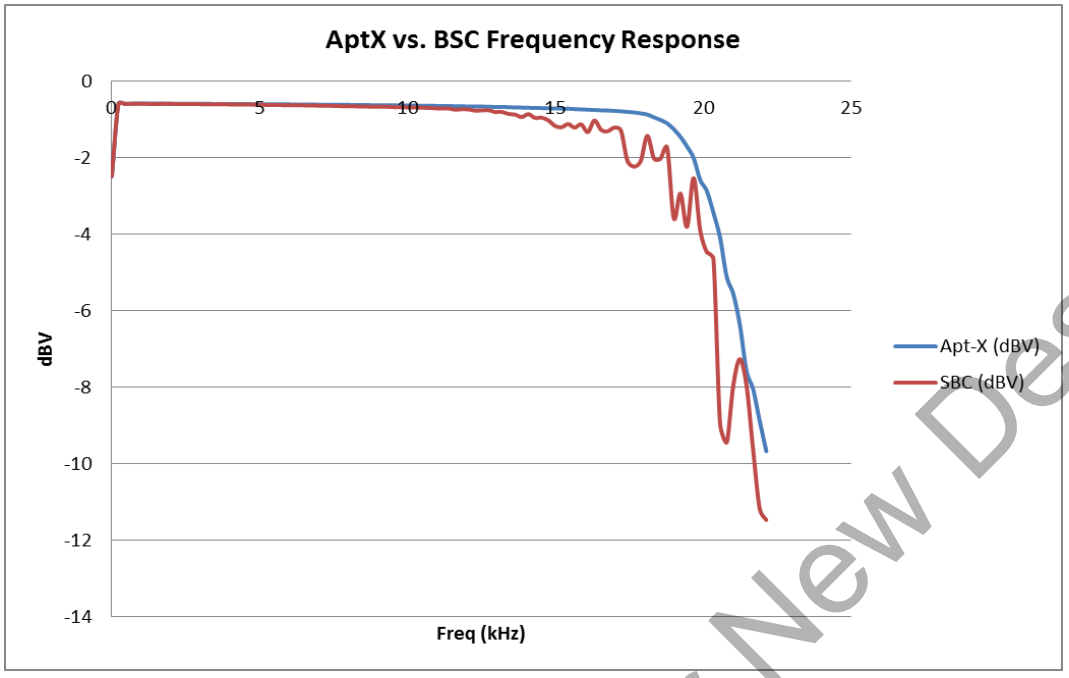


**Figure 4: Frequency response of aptX and SBC codecs**

#### 5.4.3.3 AAC

AAC (Advanced Audio Coding) achieves better sound quality than MP3 and it is the default audio format for YouTube and iPhone among others. AAC has long latency (>100ms) compared to aptX®. Because of high processing capacity requirement for encoding, WT32i does not support AAC as A2DP source. Thus WT32i can be used for receiving (A2DP sink) AAC (from iPhone for example) but it cannot transmit AAC coded audio.

Not Recommended for New Designs

## 5.5 RF Characteristics

### 5.5.1 RF Transceiver

| Transceiver characteristic | | Min | Typ | Max | Unit |
|---|---|---|---|---|---|
| Maximum transmit power | | 5 | 6.5 | 8 | dBm |
| Minimum transmit power | | | -17 | | dBm |
| Transmit power stability over the temperature range | | | +/- 0.5 | | dB |
| Transmit power variation within the BT band | | | | 1 | dB |
| Sensitivity DH1 | RT | | -90 | | dBm |
| | -40C | | -91 | | dBm |
| | +85C | | -86 | | dBm |
| Sensitivity 3DH5 | RT | | -83 | | dBm |
| | -40C | | -84 | | dBm |
| | +85C | | -80 | | dBm |

**Table 9: Transceiver characteristics**

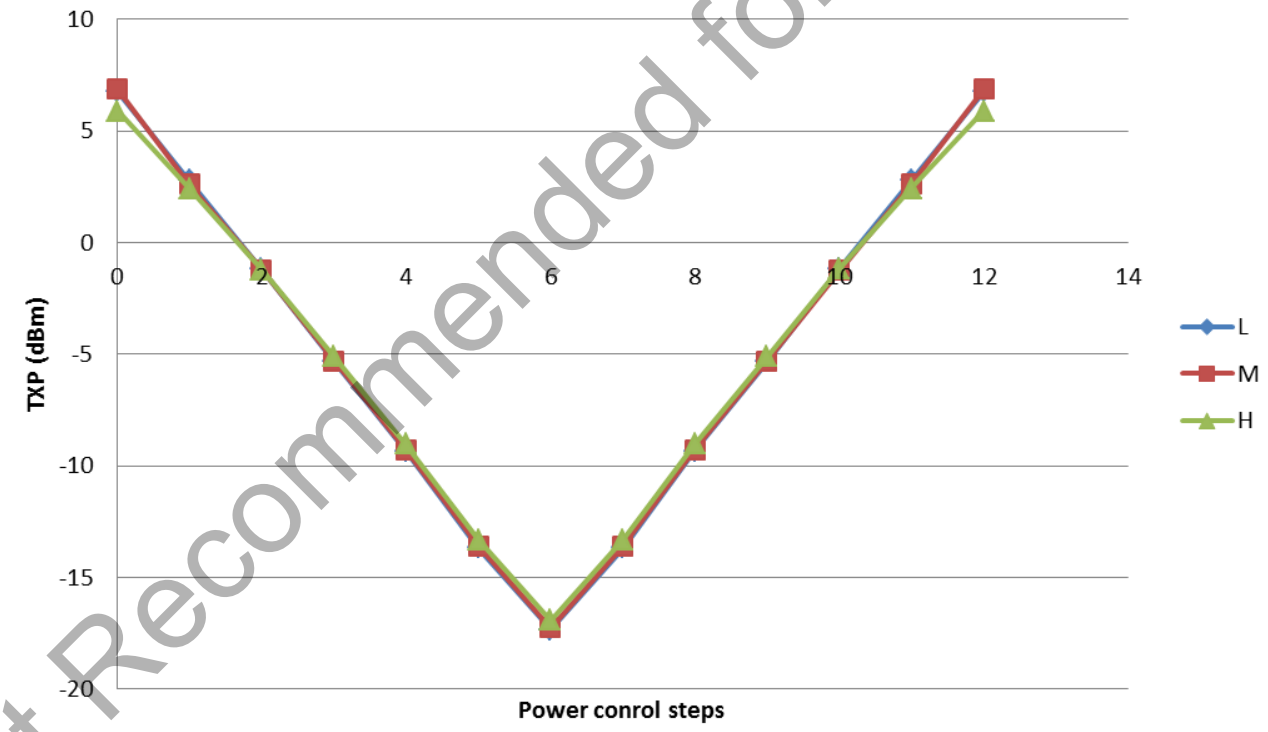


**Table 10: Power control of WT32i**

Not Recommended for New Designs

| Standard | Band / Frequency | Min (AVG / PEAK) | Typ (AVG / PEAK) | Max (AVG / PEAK) | Limit by the Standard (AVG / PEAK) | Unit |
|---|---|---|---|---|---|---|
| FCC part 15 transmitter spurious emissions | 2nd harmonic | | 50 / 61 | | 54 / 74 | dBuV/m |
| | 3rd harmonic | | < 40 / 50 | | 54 / 74 | dBuV/m |
| | Band edge 2390MHz | | | | 54 / 74 | dBuV/m |
| | Band edge 2483.5MHz | | | | 54 / 74 | dBuV/m |
| | Band edge 2400MHz (conducted) | | | | -20 | dBc |
| | Band edge 2483.5MHz (conducted) | | | | -20 | dBc |
| ETSI EN 300 328 transmitter spurious emissions | Band edge 2400MHz | | | | -30 | dBm |
| | 2nd harmonic | | -35 | | -30 | dBm |
| | 3rd harmonic | | <-40 | | -30 | dBm |
| ETSI EN 300 328 receiver spurious emissions | (2400 - 2479) MHz | | | | -47 | dBm |
| | (1600 - 1653) MHz | | | | -47 | dBm |

**Table 11: WT32i-A spurious emissions**

**Note**: All the emissions tested with maximum 8 dBm TX power

### 5.5.2 Antenna Characteristics

Note: Antenna characteristics may vary depending on the mother board layout. Following characteristics have been measured using DKWT32i

- Antenna efficiency -3.5 dB (45%)
- Peak gain 0 dBi

Not Recommended for New Designs

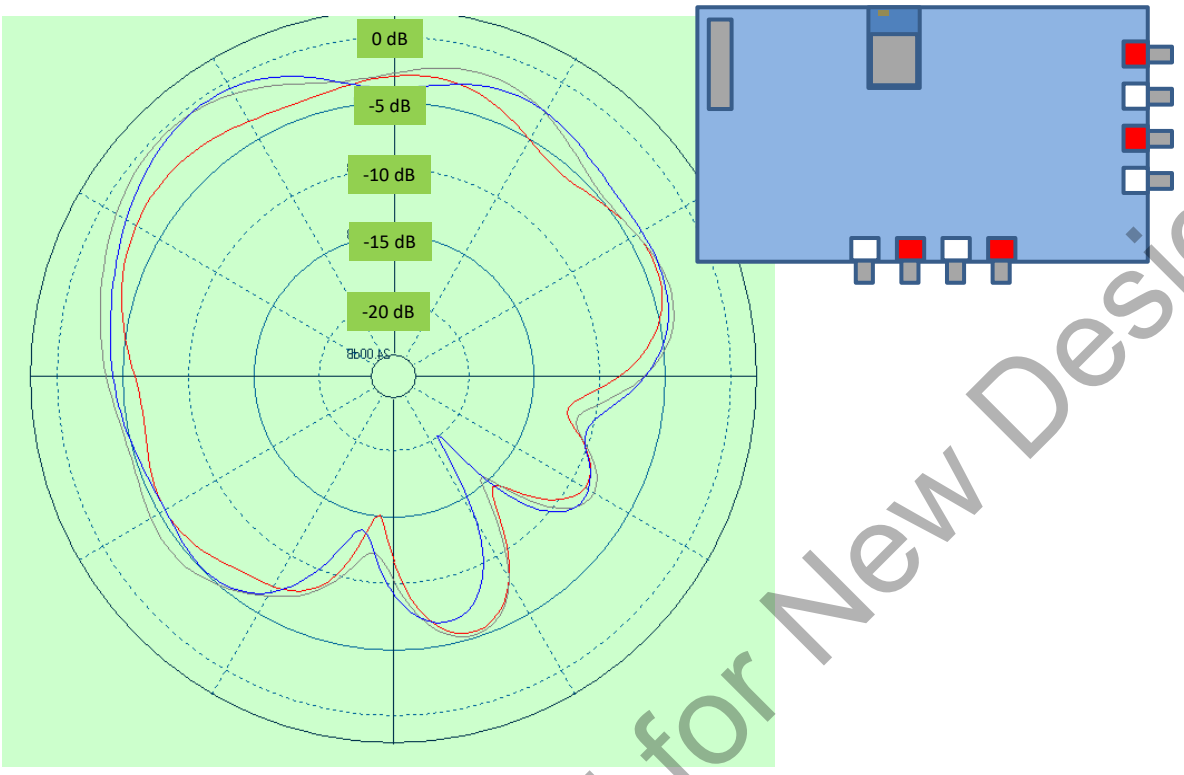


**Figure 5: Top view radiation pattern of DKWT32i**

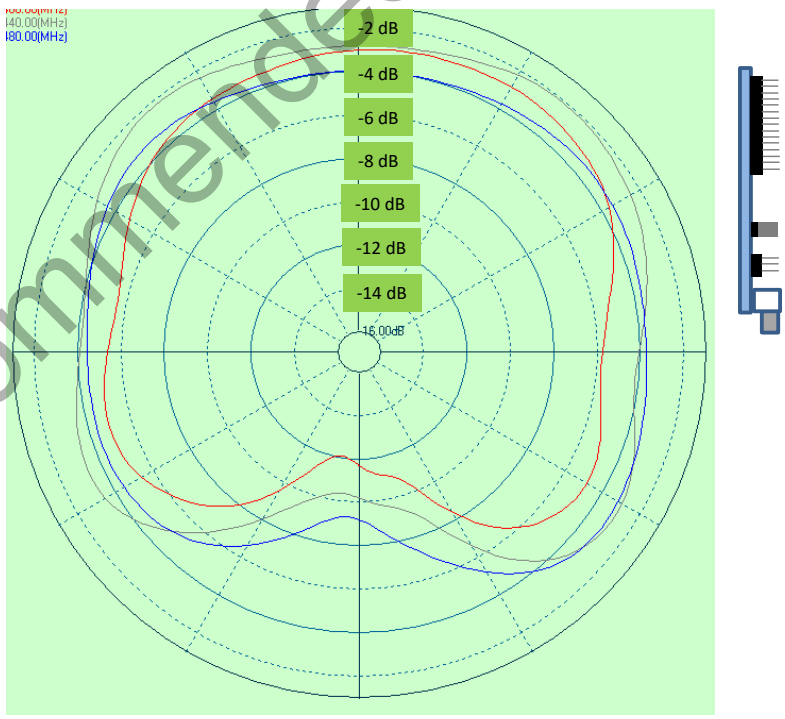


**Figure 6: Side view radiation pattern of DKWT32i**

Not Recommended for New Designs

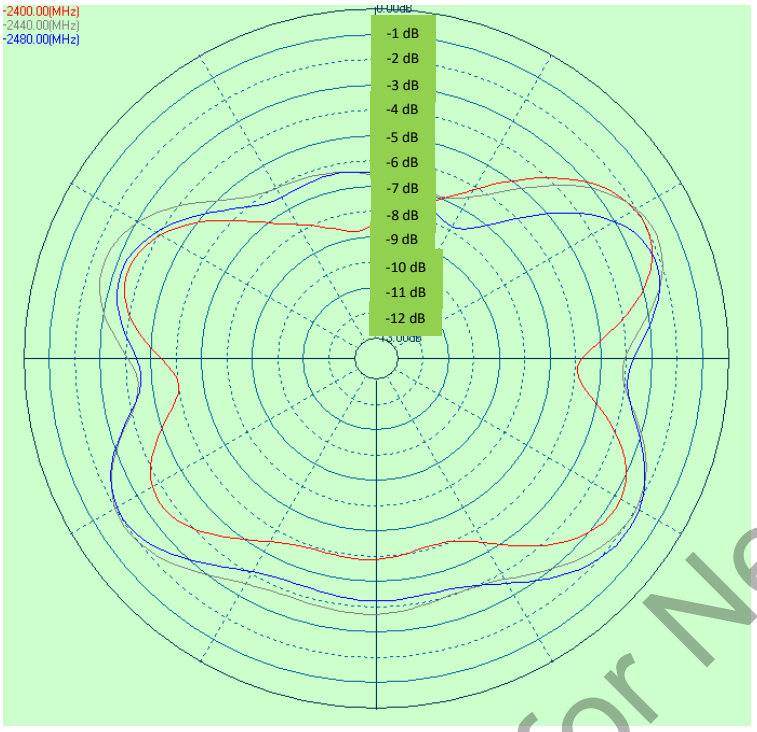




**Figure 7: Front view radiation pattern**

Not Recommended for New Designs

## 5.6 Current Consumption

| Operation Mode | | Peak | Average | Unit |
|---|---|---|---|---|
| Idle | SET BT PAGEMODE 0 2000 0 | 12 | 2.0 | mA |
| | SET BT PAGEMODE 0 2000 1 | | 2.0 | |
| | SET BT PAGEMODE 0 2000 2 | | 2.0 | |
| | SET BT PAGEMODE 1 2000 0 | 32 | 2.0 | |
| | SET BT PAGEMODE 1 2000 1 | | 2.1 | |
| | SET BT PAGEMODE 1 2000 2 | | 2.1 | |
| | SET BT PAGEMODE 2 2000 0 | | 23 | |
| | SET BT PAGEMODE 2 2000 1 | | 2.2 | |
| | SET BT PAGEMODE 2 2000 2 | | 2.1 | |
| | SET BT PAGEMODE 3 2000 0 | | 23 | |
| | SET BT PAGEMODE 3 2000 1 | | 2.3 | |
| | SET BT PAGEMODE 3 2000 2 | | 2.2 | |
| | SET BT PAGEMODE 4 2000 0 | | 23 | |
| | SET BT PAGEMODE 4 2000 1 | | 2.3 | |
| | SET BT PAGEMODE 4 2000 2 | | 2.2 | |
| Sleep | SET BT PAGEMODE 0 2000 0 | 12 | 0.08 | mA |
| | SET BT PAGEMODE 0 2000 1 | | 0.08 | |
| | SET BT PAGEMODE 0 2000 2 | | 0.08 | |
| | SET BT PAGEMODE 1 2000 0 | 32 | 0.18 | |
| | SET BT PAGEMODE 1 2000 1 | | 0.18 | |
| | SET BT PAGEMODE 1 2000 2 | | 0.18 | |
| | SET BT PAGEMODE 2 2000 0 | | 23.5 | |
| | SET BT PAGEMODE 2 2000 1 | | 0.31 | |
| | SET BT PAGEMODE 2 2000 2 | | 0.19 | |
| | SET BT PAGEMODE 3 2000 0 | | 23 | |
| | SET BT PAGEMODE 3 2000 1 | | 0.4 | |
| | SET BT PAGEMODE 3 2000 2 | | 0.29 | |
| | SET BT PAGEMODE 4 2000 0 | | 23 | |
| | SET BT PAGEMODE 4 2000 1 | | 0.4 | |
| | SET BT PAGEMODE 4 2000 2 | | 0.29 | |
| Connected, Sniff disabled | SET BT SNIFF 0 20 1 8 | | 4.7 | |
| Connected + Sniff, Master | SET BT SNIFF 40 20 1 8 | | 3.9 | |
| Connected + Sniff, Master | SET BT SNIFF 1000 20 1 8 | | 2.5 | |
| Connected + Sniff, Slave | SET BT SNIFF 40 20 1 8 | | 3.6 | |
| Connected + Sniff, Slave | SET BT SNIFF 1000 20 1 8 | | 2.5 | |
| A2DP Audio Streaming | A2DP SINK, INTERNAL CODEC | 75 | 28 | mA |
| A2DP Audio Streaming | A2DP SOURCE, INTERNAL CODEC | 70 | 23 | |

**Table 12: Current consumption of WT32i**

Not Recommended for New Designs

# 6 Power Control and Regulation

WT32i contains an internal battery charger and a switch mode regulator that is mainly used for internal blocks of the module. The module can be powered from a single 3.3 V supply provided that VDD_CHG is floating. Alternatively the module can be powered from a battery connected to VDD_BAT and using an external regulator for VDD_IO. 1.8 V to 3.3 V supply voltage for VDD_IO can be used to give desired signal levels for the digital interfaces of the module. USB, however, requires 3.3 V for proper operation and thus, when USB is in use, 3.3 V for VDD_IO is required.

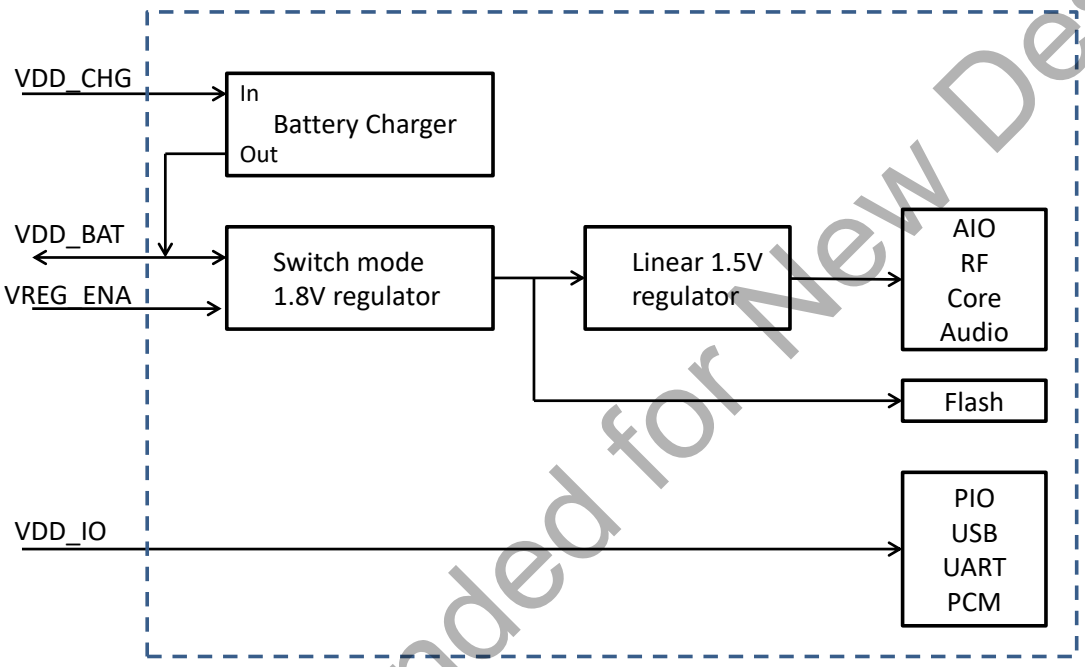


**Figure 8: Power supply configuration of WT32i**

VDD_ENA is software configurable enable pin for the internal regulators. Using iWRAP the enable pin can be configured to

1. Latch on the internal regulators at the rising edge
2. Turn the regulators on at rising edge and turn off the regulators at falling edge
3. Latch the regulators on at the rising edge and turn off the regulators at the following rising edge

GPIO can be configured to control an external regulator.

Not Recommended for New Designs

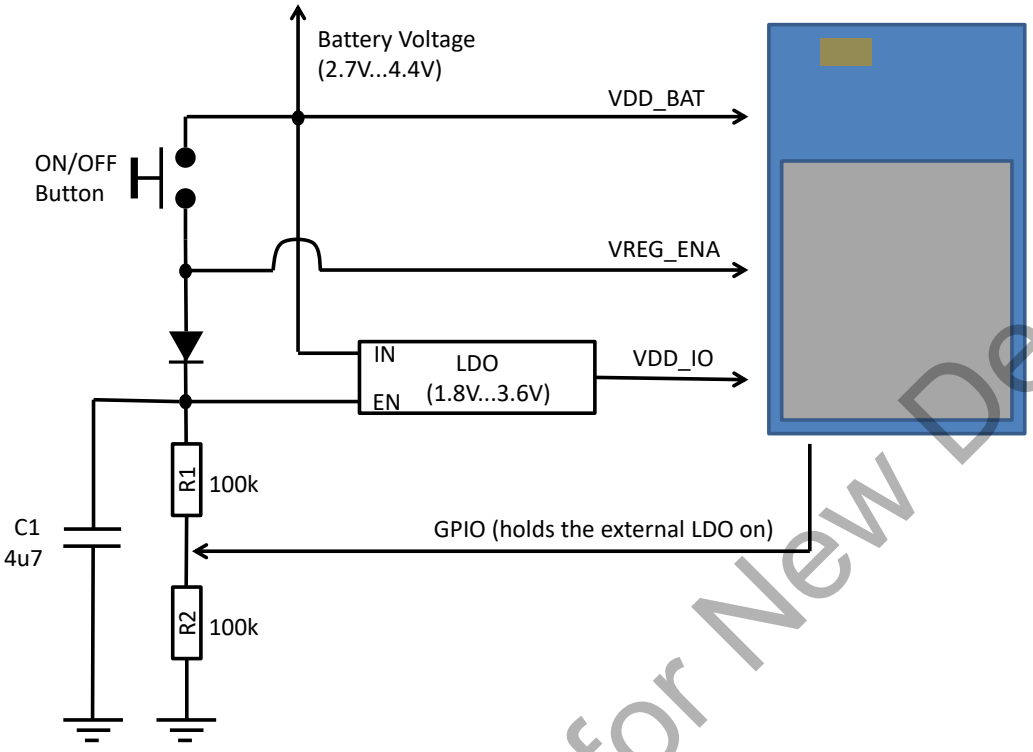


**Figure 9: Example of making a power on/off button using the latch feature of the internal regulators**

***iWRAP Example:*** *Creating an on/off button with PIO2 holding the external regulator on*

*"SET CONTROL VREGEN 2 4"*

*(PIO is defined with a bit mask. 4 in hexadecimal is 100 in binary corresponding to PIO2)*

**NOTE:** With the configuration shown above, when doing a SW reset for the module C1 will hold the enable pin of the external regulator high until iWRAP has booted. This will prevent the module from turning off during reset. When resetting through the reset pin one has to make sure that the enable pin is held high as long as the reset pin is held active.

Figure 10 shows an example how to arrange power control when on/off button is not implemented. VREG_ENA pin must not be connected to VDD_IO because leakage from VDD_BAT to VDD_IO will prevent VREG_ENA to fall low enough to turn off the internal regulators.

Not Recommended for New Designs

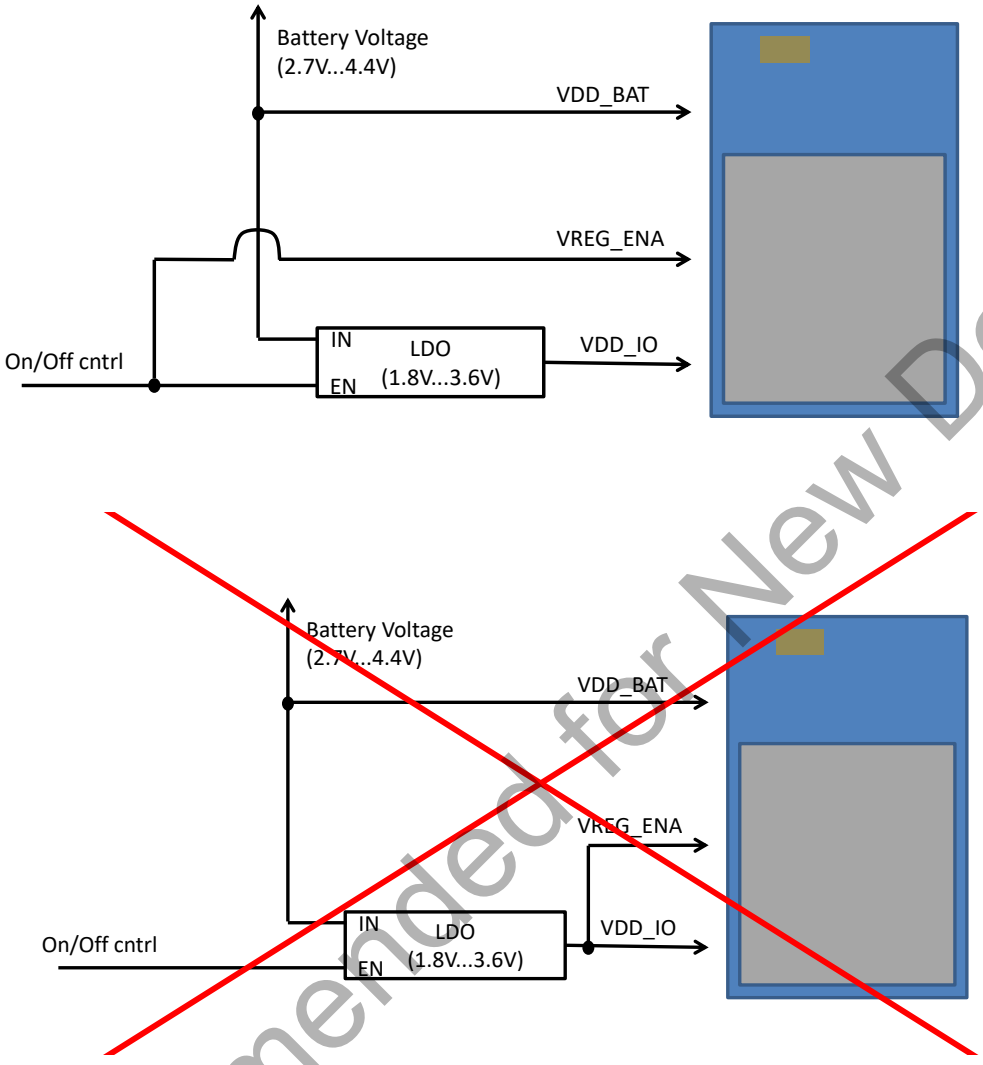


**Figure 10: Correct and wrong connection for the power on/off control**

## 6.1 Protecting the Battery by Configuring the Module to Turn Off at Certain Voltage

It is important not to let the battery be drained to voltages below 2.8V. In iWRAP it is possible to define certain level when the module turns off the regulators.

***iWRAP Example:*** *Configure WT32i to start sending low battery warning at 3.4V, turn off at 3.3V and cease the low battery warning at 4.0V. Set PIO0 to indicate low batter*

*"SET CONTROL BATTERY 3400 3300 4000 10"*

Not Recommended for New Designs

## 6.2 Reset

WT32i may be reset from several sources: reset pin, power on reset, a UART break character or through software configured watchdog timer.

At reset, the digital I/O pins are set to inputs for bi-directional pins and outputs are tri-state.

The chip status after a reset is as follows:

- Warm Reset: data rate and RAM data remain available
- Cold Reset: data rate and RAM data are not available

Table 13 shows the pin states of WT32i on reset. Pull-up (PU) and pull-down (PD) default to weak values unless specified otherwise.

**NOTE: In order to make reset work properly VREG_ENA pin (1st pin of WT32i module) has to be driven high for the time of reset.**

| Pin Name / Group | I/O Type | No Core Voltage Reset | Full Chip Reset |
|---|---|---|---|
| USB | Digital bi-directional | N/A | N/A |
| UART_RX | Digital input with PD | PD | PD |
| UART_CTS | | | |
| UART_TX | Digital output with PU | PU | PU |
| UART_RTS | | | |
| SPI_MOSI | Digital input with PD | PD | PD |
| SPI_CLK | | | |
| SPI_MISO | Digital tristate output with PD | | |
| SPI_CS | Digital input with PU | PU | PU |
| PCM_IN | Digital input with PD | PD | PD |
| PCM_CLK | Digital bi-directional with PD | | |
| PCM_SYNC | | | |
| PCM_OUT | Digital tri-state output with PD | | |
| GPIO | Digital bi-directional with PU/PD | PD | PD |

**Table 13: Pin states on reset**

### 6.2.1 Internal POR

WT32i has two internal POR circuits. One is internally to the BC5 chip. In BC5 the power on reset occurs when the core supply voltage (output of the internal 1.5V regulator) falls below typically 1.26V and is released when VDD_CORE rises above typically 1.31V.

Another POR circuit is embedded to the module and it keeps the module in reset until supply voltages have stabilized. This is to prevent corruption of the internal flash memory during boot. The embedded POR is shown in the figure Figure 2Figure 11.

Because the POR is based on a simple RC time constant it will not work if the supply voltage ramps very slowly or if the reset pin is not connected to high impedance. It is recommended that the power ramp will not take more than 10 msec. If the reset pin is connected to a host it is good to place a diode between the host and the module as shown in Figure 12. A diode will prevent the host from pulling the reset low before the internal flash has its supply stabilized.

Not Recommended for New Designs

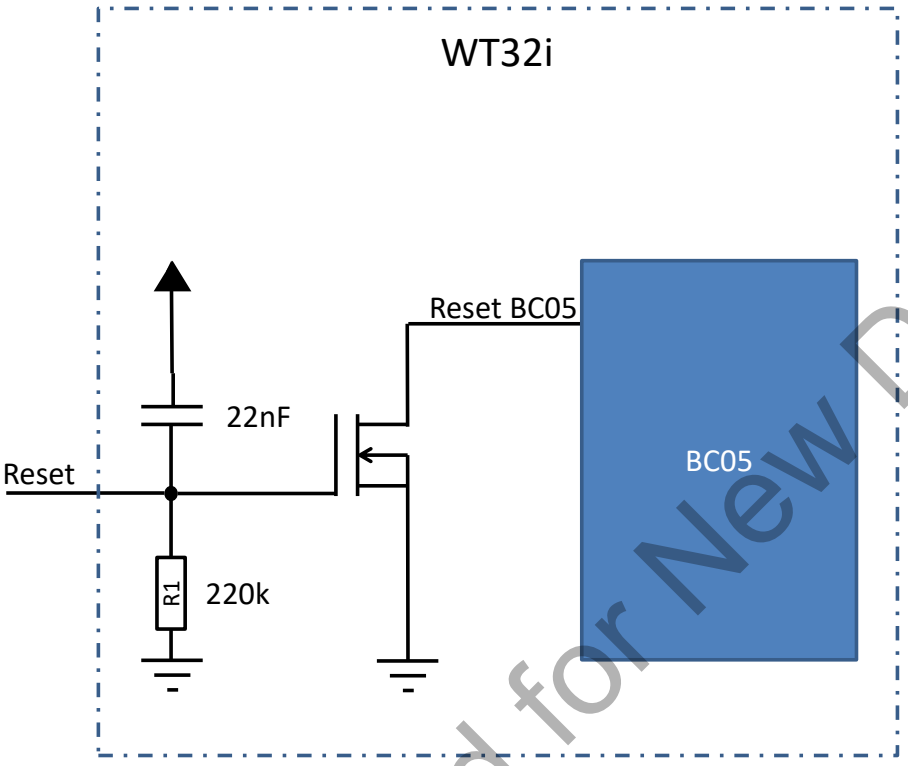


**Figure 11: Embedded POR of WT32i**

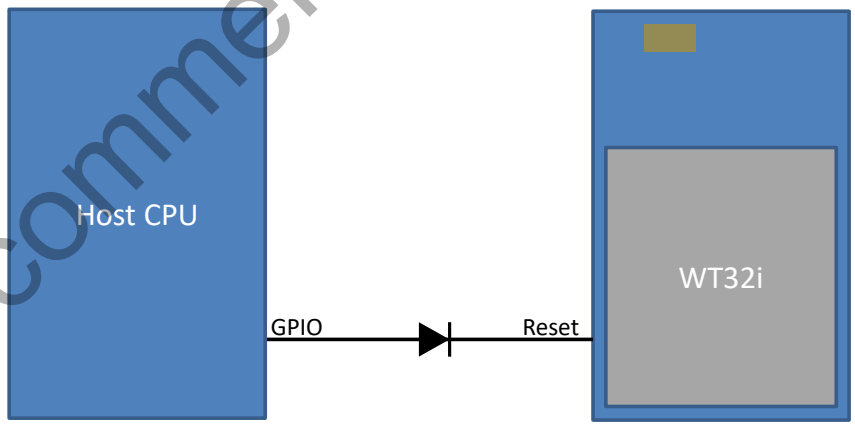


**Figure 12: An example how to connect CPU GPIO to the reset pin of the module**

Not Recommended for New Designs

# 7 Battery Charger

The battery charger is a constant current / constant voltage charger circuit, and is suitable for lithium ion/polymer batteries only. It shares a connection to the battery terminal, VDD_BAT, with the switch-mode regulator. The charger is initially calibrated by Bluegiga Technologies to have $V_{float}$ = 4.15V - 4.2 V.

The constant current level can be varied to allow charging of different capacity batteries. WT32i allows a number of different currents to be used in the battery charger hardware. Values written to PS key 0x039b CHARGER_CURRENT in the range 1..15 specify the charger current from 40..135mA in even steps. Values outside the valid 0..15 range result in no change to the charging current. The default charging current (Key = 0) is nominally 40mA. Setting 0 is interpreted as “no-change” so it will be ignored

The charger enters various states of operation as it charges a battery. These are shown below:

- Off: entered when the charger is disconnected.
- Trickle Charge: entered when the battery voltage is below 2.9V.
- Fast Charge - Constant Current: entered when the battery voltage is above 2.9V.
- Fast Charge - Constant Voltage: entered when the battery has reached $V_{float}$, the charger switches mode to maintain the cell voltage at $V_{float}$ voltage by adjusting the constant charge current.
- Standby: this is the state when the battery is fully charged and no charging takes place.

When a voltage is applied to the charger input terminal VDD_CHG, and the battery is not fully charged, the charger will operate and a LED connected to the terminal LED0 will illuminate. By default, until the firmware is running, the LED will pulse at a low-duty cycle to minimize current consumption.

The battery charger circuitry auto-detects the presence of a power source, allowing the firmware to detect when the charger is powered. Therefore, when the charger supply is not connected to VDD_CHG, the terminal must be left open circuit. The VDD_CHG pin, when not connected, must be allowed to float and not be pulled to a power rail. When the battery charger is not enabled, this pin may float to a low undefined voltage. Any DC connection will increase current consumption of the device. Capacitive components such as diodes, FETs, and ESD protection, may be connected.

The battery charger is designed to operate with a permanently connected battery. If the application permits the charger input to be connected while the battery is disconnected, the VDD_BAT pin voltage may become unstable. This, in turn, may cause damage to the internal switch-mode regulator. Connecting a 470 µF capacitor to VDD_BAT limits these oscillations thus preventing damage.

**WARNING:**

Use good consideration for battery safety. Do not charge with too much current. Do not charge when the temperature is above 60°C or below 0°C. WT32i is initially calibrated to stop charging when battery voltage is at 4.2 V. Do not try to charge batteries above 4.2 V. Do not short circuit the battery or discharge below 1.5 V.

Not Recommended for New Designs

# 8 GPIO and AIO Functions

## 8.1 iWRAP supported GPIO Functions

Various GPIO functions are supported by iWRAP. These include:

- Setting each GPIO state individually
- Binding certain iWRAP commands to GPIO to trigger the command at either the rising or falling edge of the GPIO
- Carrier detect signal to indicate an active Bluetooth connection
- Implementing RS232 modem signals
- iWRAP ready indicator to signal to a host that iWRAP is ready to use
- UART bypass mode to route UART signals to GPIO pins instead of iWRAP
- Driving low frequency pulsed signal from a GPIO

Some of the functions are FW dependent. Refer to latest iWRAP user manual for the detailed information about the GPIO functions.

## 8.2 Outputting Internal Clocks

Internal clocks can be routed to either AIO0 or AIO1 by setting PS Keys. To route internal clock to AIO0 set PSKEY_AMUX_AIO0 to 0x00fe. Following table shows how to set the PSKEY_AMUX_CLOCK to get certain frequency from AIO0.

| AMUX_CLOCK | Freq (MHz) @ AIO0 |
|---|---|
| 0x0014 | 1 |
| 0x0004 | 2 |
| 0x0013 | 3 |
| 0x0017 | 4 |
| 0x0003 | 6 |
| 0x0016 | 6.5 |
| 0x0007 | 8 |
| 0x0011 | 12 |
| 0x0006 | 13 |
| 0x0002 | 16 |
| 0x0009 | 24 |
| 0x0005 | 32 |

**Table 14: Selectable internal clock frequencies from AIO0**

iWRAP does not support this feature. To use this feature either the particular PS Keys must be set to each module separately or then ask for custom FW from Bluegiga.

Not Recommended for New Designs

## 8.3 Auxiliary ADC

Simple iWRAP command can be used to read the ADC output from either of the two AIO pins. Refer to latest iWRAP user manual for the detailed information.

## 8.4 Software I2C Interface

PIO6 and PIO7 can be used to form a master $I^2C$ interface. The interface is formed using software to drive these lines. Therefore it is suited only to relatively slow functions such as driving a dot matrix LCD, keyboard scanner or configuring external audio codec. $I^2C$ interface requires a custom FW.

| PIO | I2C Signal |
|---|---|
| PIO6 | SCL |
| PIO7 | SDA |

**Table 15: I2C Interface of WT32i**

Not Recommended for New Designs

# 9 Serial Interfaces

## 9.1 UART Interface

WT32i has a standard UART serial interface that provides a simple mechanism for communicating with other serial devices using the RS232 protocol. UART configuration parameters, such as baud rate, parity and stop bits can be configured with an iWRAP command.

The hardware flow control is enabled by default. HW flow control can be disabled in HW by connecting UART_NCTS to GND and leaving UART_NRTS floating.

| Parameter | | Possible Values |
|---|---|---|
| Baud rate | Minimum | 1200 baud (≤2%Error) |
| | | 9600 (≤1%Error) |
| | Maximum | 4Mbaud (≤1%Error) |
| Flow control | | RTS/CTS or None |
| Parity | | None, Odd, Even |
| Number of stop bits | | 1 or 2 |
| Bits per byte | | 8 |

**Table 16: Possible UART settings**

***iWRAP Example:*** Configuring local UART to 9600bps, 8 data bits, no parity and 1 stop bit

SET CONTROL BAUD 9600, 8N1

(9600 = baud rate, N = No parity, 1 = 1 stop bit)

| Baud Rate | Error |
|---|---|
| 1200 | 1.73% |
| 2400 | 1.73% |
| 4800 | 1.73% |
| 9600 | -0.82% |
| 19200 | 0.45% |
| 38400 | -0.18% |
| 57600 | 0.03% |
| 76800 | 0.14% |
| 115200 | 0.03% |
| 230400 | 0.03% |
| 460800 | -0.02% |
| 921600 | 0.00% |
| 1382400 | -0.01% |
| 1843200 | 0.00% |
| 2764800 | 0.00% |
| 3686400 | 0.00% |

**Table 17: Standard Baud Rates**

Not Recommended for New Designs

### 9.1.1 Resetting Through UART Break Signal

The UART interface can reset WT32i on reception of a break signal. A break is identified by a continuous logic low (0V) on the UART_RX terminal. If $t_{BRK}$ is longer than the value (in microseconds), defined by PSKEY_HOSTIO_UART_RESET_TIMEOUT, (0x1a4), a reset occurs. Values below 1000 are treated as zero and values above 255000 are truncated to 255000. This feature allows a host to initialise the system to a known state. Also, WT32i can emit a break character that may be used to wake the host.

Default PSKEY_HOSTIO_UART_RESET_TIMEOUT setting in WT32i is zero, which means that this feature is disabled. To use this feature, either the PS setting has to be changed for each module separately or ask for modules with custom FW with appropriate settings.

### 9.1.2 UART Configuration While Reset is Active

The UART interface for WT32i is tristate while the chip is being held in reset. This allows the user to daisy chain devices onto the physical UART bus. The constraint on this method is that any devices connected to this bus must tristate when WT32i reset is de-asserted and the firmware begins to run.

### 9.1.3 UART Bypass Mode

Alternatively, for devices that do not tristate the UART bus, the UART bypass mode on WT32i can be used. The default state of WT32i after reset is de-asserted; this is for the host UART bus to be connected to the WT32i UART, thereby allowing communication to WT32i via the UART. All UART bypass mode connections are implemented using CMOS technology and have signalling levels of 0V and VDD_IO.

The bypass mode is enabled with a simple iWRAP command. When in bypass mode, the module is automatically set into deep sleep state indefinitely. Physical reset is required to return to normal operation mode. The current consumption of a module in bypass mode is equal to a module in standby (idle) mode.

It is important for the host to ensure a clean Bluetooth disconnection of any active links before the bypass mode is invoked. Therefore, it is not possible to have active Bluetooth links while operating the bypass mode.

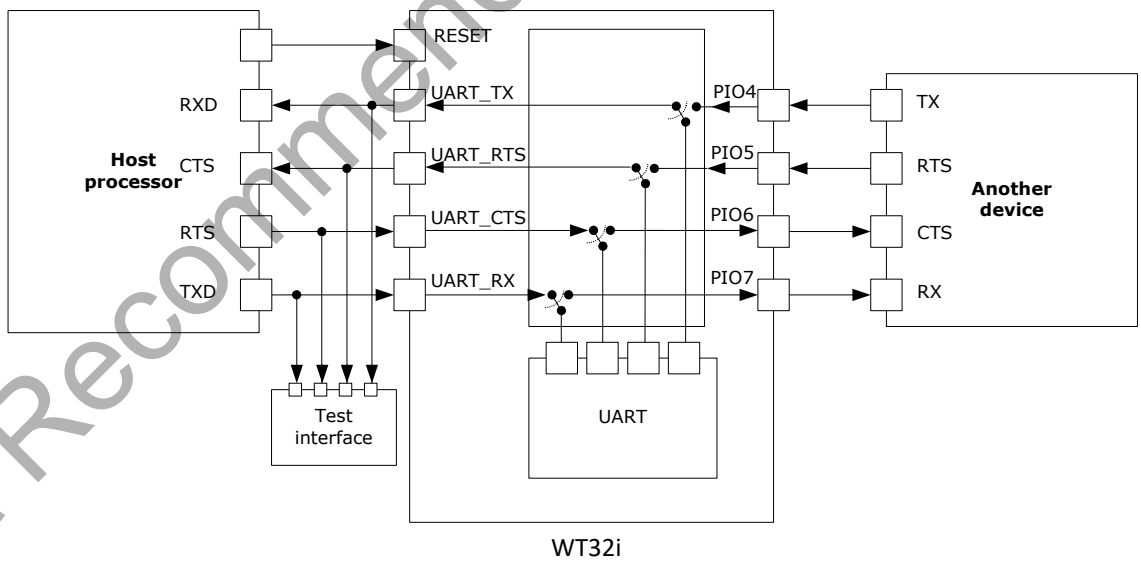


**Figure 13: UART bypass architecture**

Not Recommended for New Designs

## 9.2 USB Interface

WT32i has a full-speed (12Mbps) USB interface for communicating with other compatible digital devices. The USB interface on WT32i acts as an USB peripheral, responding to requests from a master host controller. WT32i can be used as bus-powered or self-powered device. See the WT_USB_Design_Guide available in the Bluegiga techforum for details about the SW and HW configuration of the USB interface.

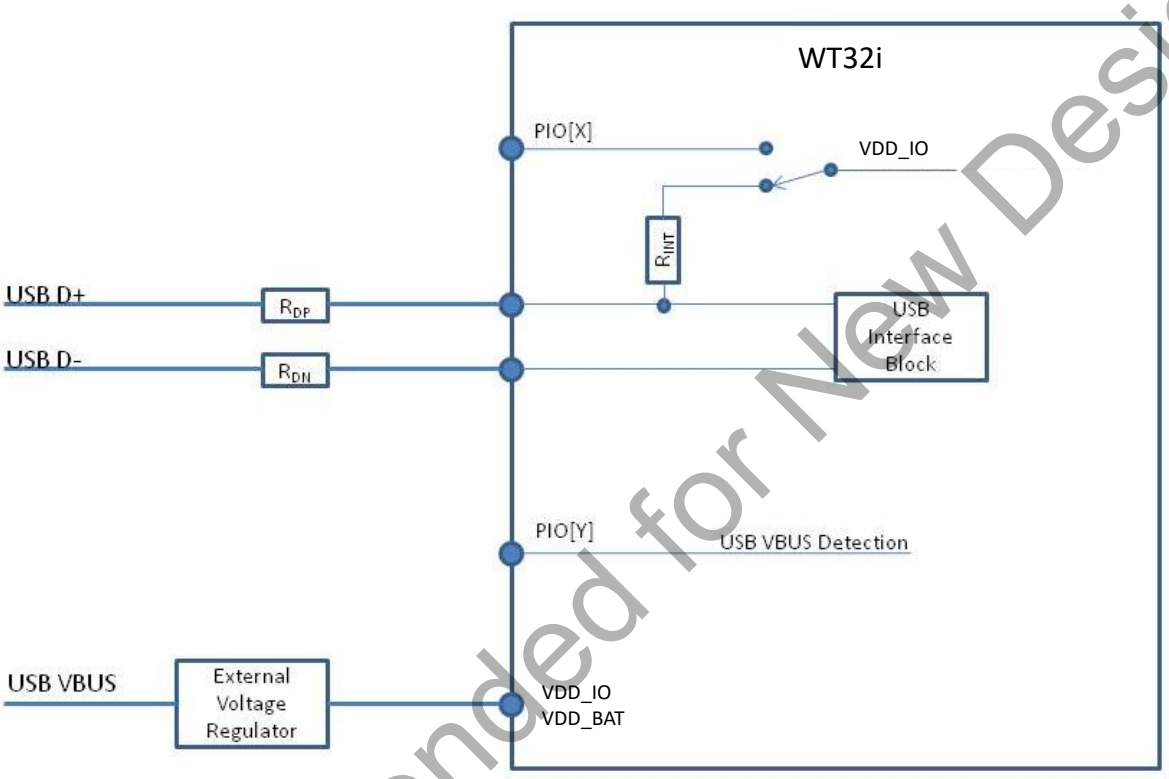


**Figure 14: Bus-powered WT32i device configuration**

Not Recommended for New Designs

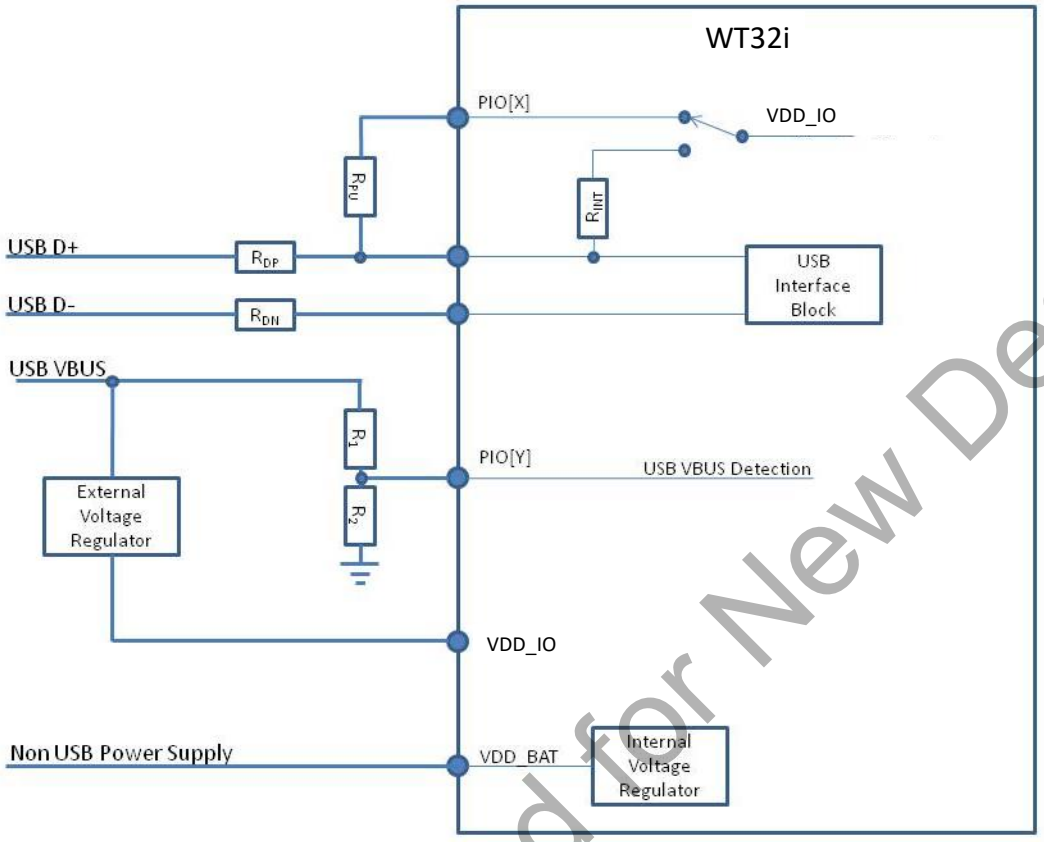


**Figure 15: Self powered WT32i device configuration**

## 9.3 Programming and Debug Interface (SPI)

The synchronous serial port interface (SPI) is for interfacing with other digital devices. The SPI port can be used for system debugging. It can also be used for programming the Flash memory. SPI interface is connected by using the MOSI, MISO, CSB and CLK pins.

SPI interface cannot be used for any application purposes.

### 9.3.1 Multi-slave Operation

WT32i should not be connected in a multi-slave arrangement by simple parallel connection of slave MISO lines. When WT32i is deselected (SPI_CS# = 1), the SPI_MISO line does not float. Instead, WT32i outputs 0 if the processor is running or 1 if it is stopped.

Not Recommended for New Designs

# 10 Audio Interfaces

## 10.1 Stereo Audio Codec Interface

Stereo audio CODEC operates from an internal 1.5V power supply. It uses fully differential architecture in analog signal path for the best possible common mode noise rejection while effectively doubling the signal amplitude.

The stereo audio bus standard I2S is supported and a software I2C interface can be implemented using GPIOs to configure an external audio CODEC.

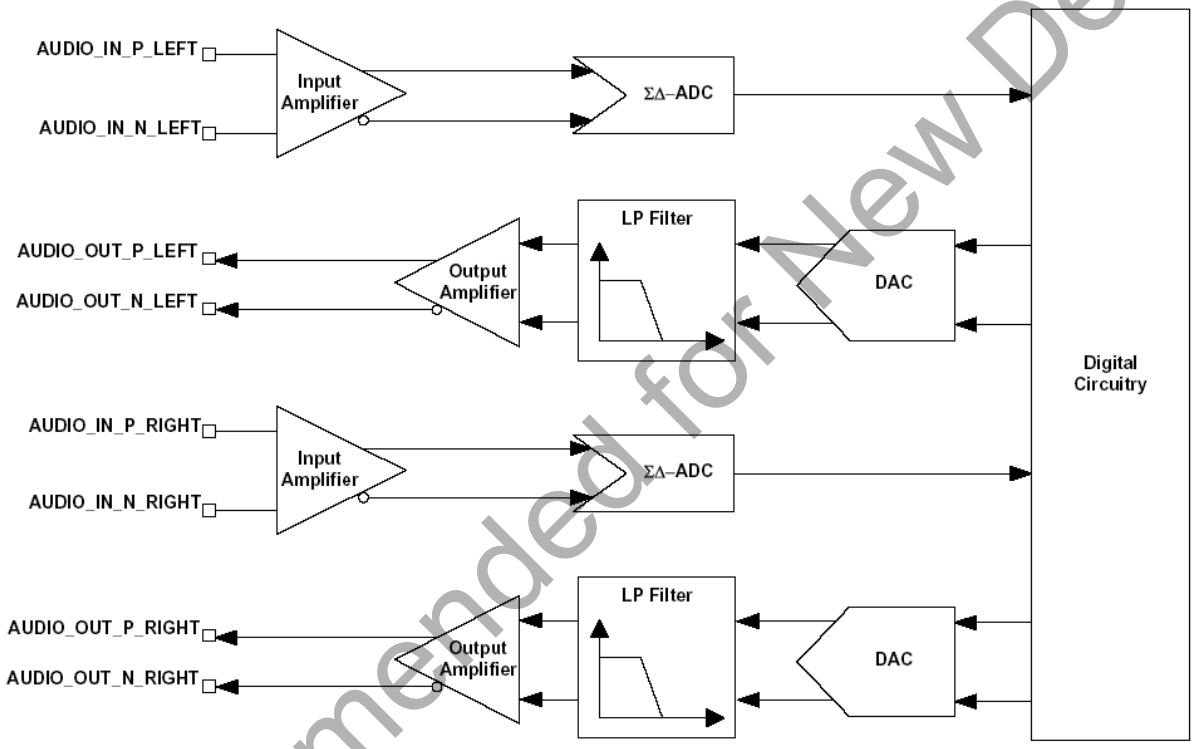


**Figure 16: Stereo CODEC input and output stages**

### 10.1.1 ADC

The ADC consists of two second-order sigma-delta converters and gain stages. The gain stage consists of digital and analog gain stages which are controlled by iWRAP. The optimal combination of digital and analog gain is automatically selected by iWRAP. The analog gain stage consist selectable 24 dB preamplifier for selecting microphone or line input levels and an amplifier which can be configured in 3 dB steps. The iWRAP gain selection values are shown in the Table 19.

Following sample rates are supported

- 8kHz
- 11.025kHz
- 16kHz
- 22.05kHz
- 24kHz
- 32kHz
- 44.1kHz

Not Recommended for New Designs

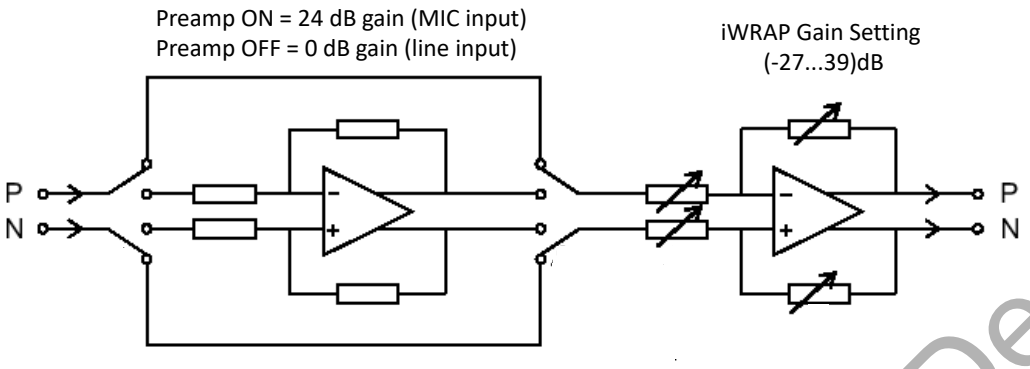


**Table 18: ADC amplifier block diagram**

| Gain Setting In iWRAP | ADC Gain (dB)<br>Preamp OFF<br>(Line input mode) | ADC GAIN (dB)<br>Preamp ON<br>(MIC input mode) |
|---|---|---|
| 0 | -27 | -3 |
| 1 | -24 | 0 |
| 2 | -21 | 3 |
| 3 | -18 | 6 |
| 4 | -15 | 9 |
| 5 | -12 | 12 |
| 6 | -9 | 15 |
| 7 | -6 | 18 |
| 8 | -3 | 21 |
| 9 | 0 | 24 |
| A | 3 | 27 |
| B | 6 | 30 |
| C | 9 | 33 |
| D | 12 | 36 |
| E | 15 | 39 |
| F | 18 | 42 |
| 10 | 21 | 45 |
| 11 | 24 | 48 |
| 12 | 27 | 51 |
| 13 | 30 | 54 |
| 14 | 33 | 57 |
| 15 | 36 | 60 |
| 16 | 39 | 63 |

**Table 19: ADC Gain Selection In iWRAP**

***iWRAP Example:*** *Setting line input with 0 dB gain*

*"SET CONTROL PREAMP 0"*

*"SET CONTROL GAIN 9 x" (x is the DAC gain)*

Not Recommended for New Designs

### 10.1.2 DAC

The DAC consists of two second-order sigma-delta converters and gain stages. The gain stage consists of digital and analog gain stages which are controlled by iWRAP. The optimal combination of digital and analog gain is automatically selected by iWRAP. The analog gain stage consist selectable 24 dB preamplifier for selecting microphone or line input levels and an amplifier which can be configured in 3 dB steps. The iWRAP gain selection values are shown in Table 20.

Following sample rates are supported

- 8kHz
- 11.025kHz
- 16kHz
- 22.05kHz
- 24kHz
- 32kHz
- 44.1kHz
- 48kHz

| Gain Setting In iWRAP | DAC Gain (dB) |
|---|---|
| 0 | -42 |
| 1 | -39 |
| 2 | -36 |
| 3 | -33 |
| 4 | -30 |
| 5 | -27 |
| 6 | -24 |
| 7 | -21 |
| 8 | -18 |
| 9 | -15 |
| A | -12 |
| B | -9 |
| C | -6 |
| D | -3 |
| E | 0 |
| F | 3 |
| 10 | 6 |
| 11 | 9 |
| 12 | 12 |
| 13 | 15 |
| 14 | 18 |
| 15 | 21 |
| 16 | 24 |

**Table 20: DAC gain selection in iWRAP**

***iWRAP Example:*** *Setting output with 0 dB gain*

*"SET CONTROL GAIN x E" (x is the ADC gain)*

Not Recommended for New Designs

### 10.1.3 Microphone Input

Figure 17 shows the recommended microphone biasing. The microphone bias, MIC_BIAS, derives its power from the VDD_BAT and requires 1uF capacitor on its output (C1).

The input impedance at AUDIO_IN_P_LEFT and AUDIO_IN_N_LEFT is typically 6kohm and C5 and C4 are typically 1uF. If bass roll-off is required to limit the wind noise on the microphone then C4 and C5 should be 150 nF.

R2 sets the microphone load impedance and is normally in the range of 1kΩ to 2kΩ

R1, C2 and C3 improve the supply rejection by decoupling supply noise from the microphone. Values should be selected as required. R1 can be connected or to the MIC_BIAS output (which is ground referenced and provides good rejection of the supply) as shown in Figure 17. MIC_BIAS is configured to provide bias only when the microphone is required. R1 may also be connected to a convenient supply, in which case the bias network is permanently enabled.

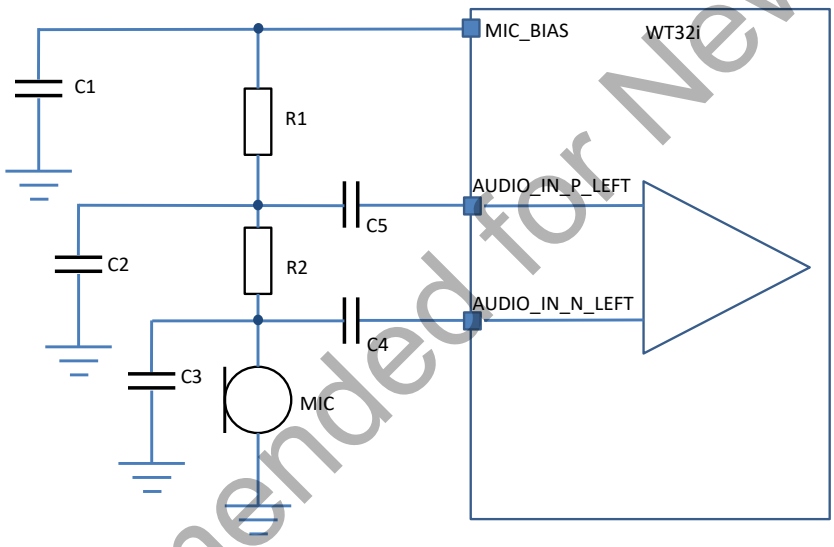


**Figure 17: Microphone connection to audio input**

The MIC_BIAS is like any voltage regulator and requires a minimum load to maintain regulation. The MIC_BIAS maintains regulation within the limits 0.200mA to 1.230mA. If the microphone sits below these limits, then the microphone output must be pre-loaded with a large value resistor to ground.

The audio input is intended for use in the range from 1µA @ 94dB SPL to about 10µA @ 94dB SPL. With biasing resistors R1 and R2 equal to 1kΩ, this requires microphones with sensitivity between about –40dBV and –60dBV.

Table 21 lists the possible voltage and current setting in iWRAP for the MIC_BIAS.

| Setting in iWRAP | Voltage (V) | Current (mA) |
|---|---|---|
| 0 | 1.71 | 0.200 |
| 1 | 1.76 | 0.280 |
| 2 | 1.82 | 0.340 |
| 3 | 1.87 | 0.420 |
| 4 | 1.95 | 0.480 |
| 5 | 2.02 | 0.530 |

Not Recommended for New Designs

| | | |
|---|---|---|
| 6 | 2.10 | 0.610 |
| 7 | 2.18 | 0.670 |
| 8 | 2.32 | 0.750 |
| 9 | 2.43 | 0.810 |
| A | 2.56 | 0.860 |
| B | 2.69 | 0.950 |
| C | 2.90 | 1.000 |
| D | 3.08 | 1.090 |
| E | 3.33 | 1.140 |
| F | 3.57 | 1.230 |

**Table 21: MIC_BIAS settings in iWRAP**

### 10.1.4 Line Input

Line input mode is selected by setting the ADC preamplifier off (see chapter 10.1.1). In the line input mode the input impedance varies from 6k to 30 kohm depending on the gain setting.

Figure 18 and Figure 19 show examples of line input connection with WT32i. The maximum line level rms voltage can vary from 0.3 up to 1.6 Vrms depending on the application, while the maximum for WT32i is 0.4Vrms (0.8Vrms differential). Thus it may be necessary to use a voltage divider (R1 and R2) at the input to attenuate the incoming signal. C1 and C2 are typically 1uF ceramic X7R or film type capacitors.

It is a good practice to place a LC (22nH + 15pF) filter close to each input to filter out any RF noise that might couple to the audio traces.

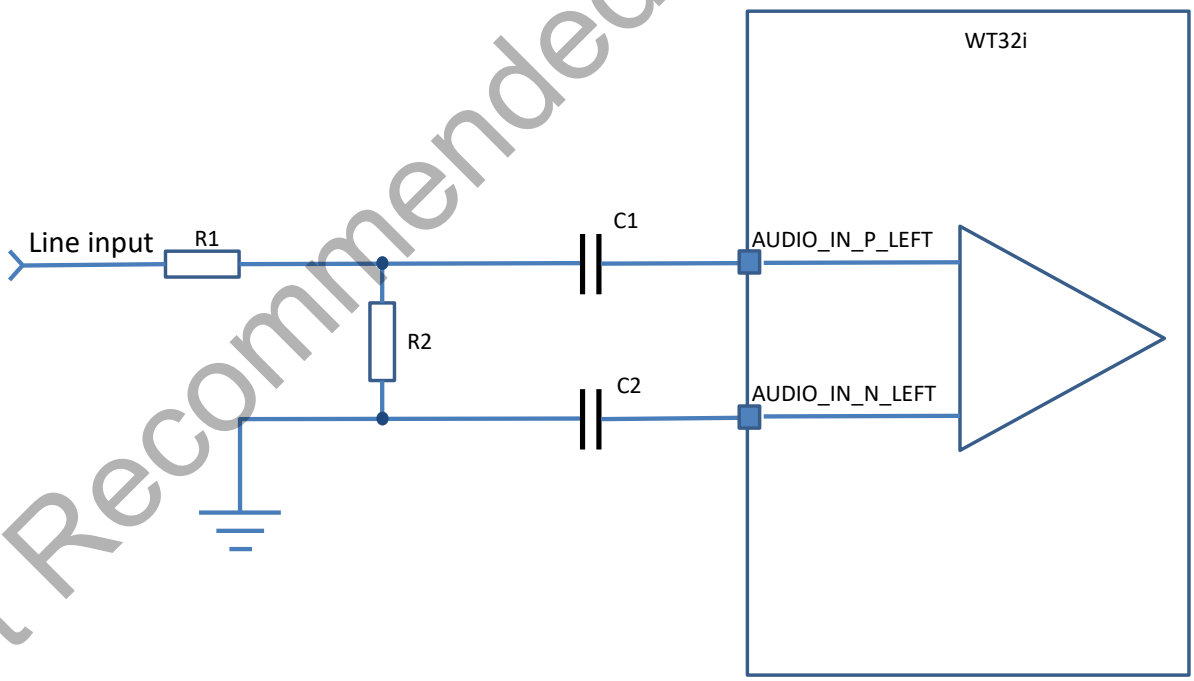


**Figure 18: Single ended line input example**

Not Recommended for New Designs

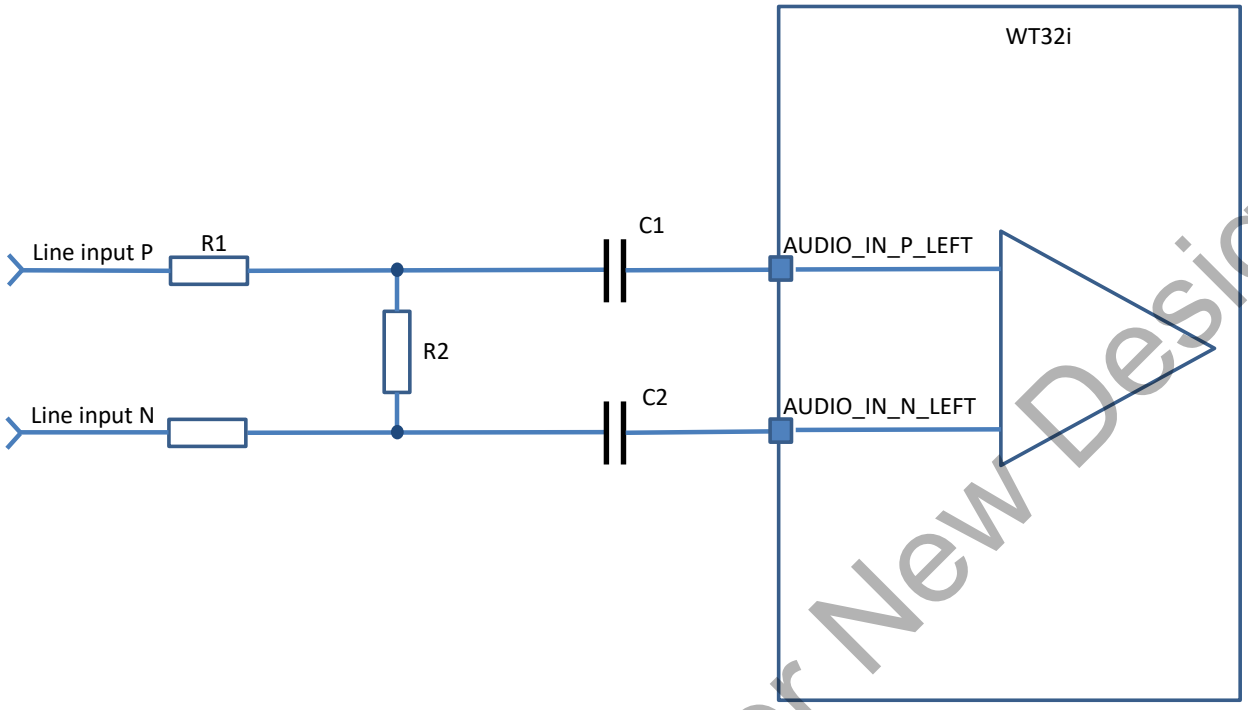


**Figure 19: Differential line input example**

### 10.1.5 Output Stage

The output stage digital circuitry converts the signal from 16-bit per sample, linear PCM of variable sampling frequency to bit stream, which is fed into the analogue output circuitry. The output stage circuit comprises a DAC with gain setting and class AB output stage amplifier.

The output is available as a differential signal between AUDIO_OUT_N_LEFT and AUDIO_OUT_P_LEFT for left channel and AUDIO_OUT_N_RIGHT and AUDIO_OUT_P_RIGHT for right channel.

The output stage is capable of driving a speaker directly when its impedance is at least 16Ω.

Figure 20 show an example of differentially connected speaker and Figure 21 show an example of speaker connected single-ended. Differential (balanced) connection provides perfect common mode rejection ratio with effectively 3 dB higher amplitude so it is recommended to use differential signaling always when possible.

Not Recommended for New Designs

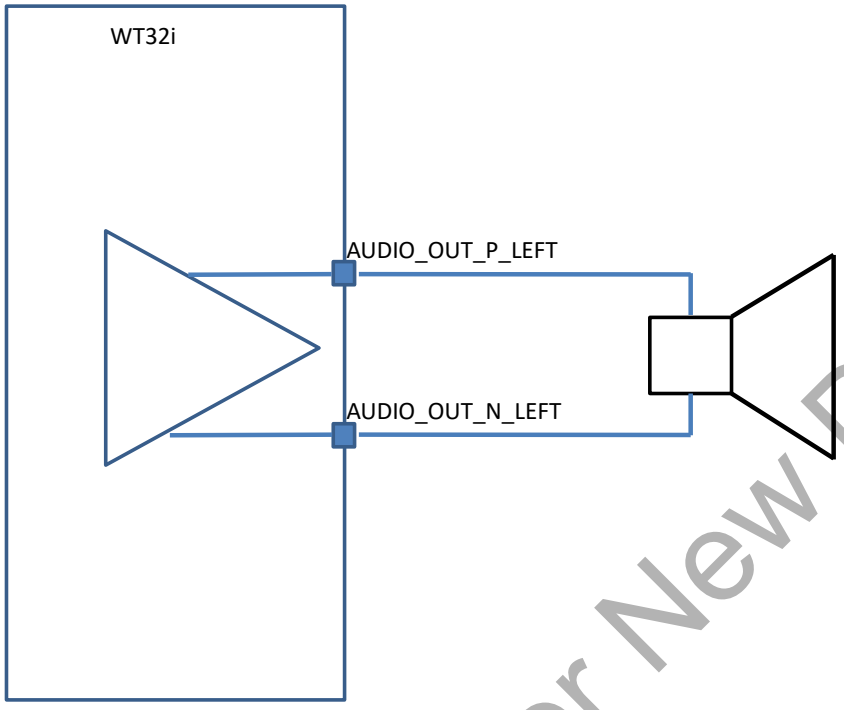


**Figure 20: Differentially connected speaker**

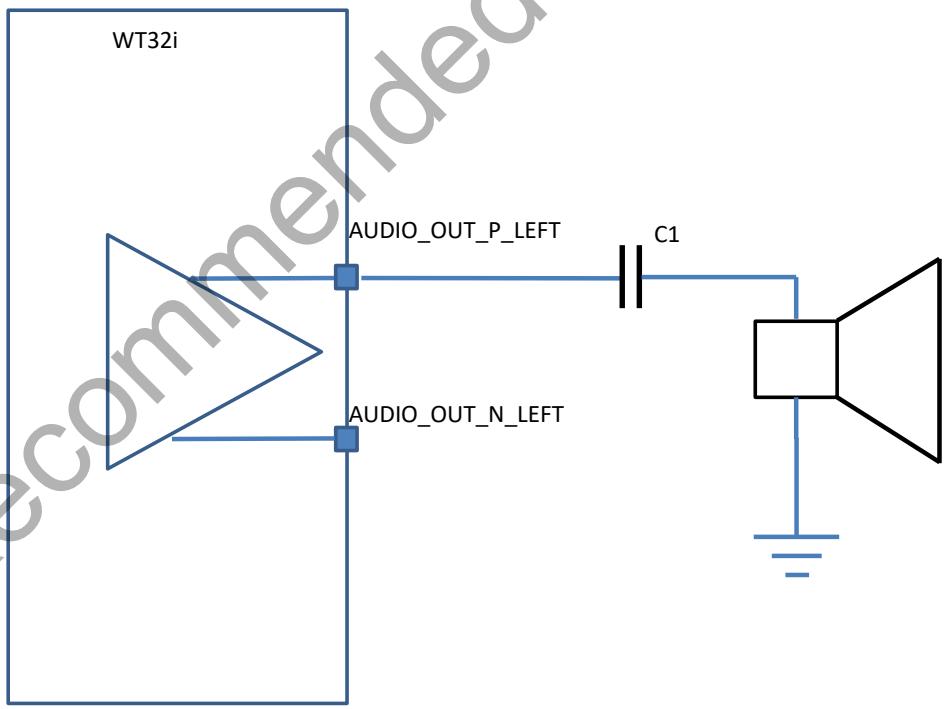


**Figure 21: Single-ended speaker connection**

Not Recommended for New Designs

### 10.1.6 Mono Operation

Mono operation is a single-channel operation of the stereo codec. The left channel represents the single mono channel for audio in and audio out. In mono operation the right channel is the auxiliary mono channel that may be used in dual mono channel operation. Dual mono feature is FW dependent and iWRAP does not generally support it.

### 10.1.7 Side Tone

In some applications it is necessary to implement side tone. This involves feeding an attenuated version of the microphone signal to the earpiece. The WT32i codec contains side tone circuitry to do this. There is no iWRAP support for the side tone but the side tone is configurable through PS Keys. To implement a side tone, either the PS setting has to be programmed for each module separately or ask for modules with custom FW with appropriate settings.

The side tone hardware is configured through the following PS Keys:

- PSKEY_SIDE_TONE_ENABLE
- PSKEY_SIDE_TONE_GAIN
- PSKEY_SIDE_TONE_AFTER_ADC
- PSKEY_SIDE_TONE_AFTER_DAC

## 10.2 PCM Interface

The audio PCM interface supports continuous transmission and reception of PCM encoded audio data over Bluetooth.

PCM is a standard method used to digitise audio, particularly voice, for transmission over digital communication channels. Through its PCM interface, WT32i has hardware support for continual transmission and reception of PCM data, so reducing processor overhead. WT32i offers a bidirectional digital audio interface that routes directly into the baseband layer of the on-chip firmware. It does not pass through the HCI protocol layer.

Hardware on WT32i allows the data to be sent to and received from a SCO connection.

Using HCI FW up to 3 SCO connections can be supported by the PCM interface at any one time. However iWRAP supports only 1 SCO connection at a time.

WT32i can operate as the PCM interface master generating PCM_SYNC and PCM_CLK or as a PCM interface slave accepting externally generated PCM_SYNC and PCM_CLK. WT32i is compatible with various clock formats, including Long Frame Sync, Short Frame Sync and GCI timing environments.

WT32i supports 13-bit or 16-bit linear, 8-bit μ-law or A-law companded sample formats, and can receive and transmit on any selection of 3 of the first four slots following PCM_SYNC. The PCM configuration options are enabled by setting the PS Key PSKEY_PCM_CONFIG32. Please contact Bluegiga technical support for details about the PCM configuration.

## 10.3 I2S Interface

The digital audio interface supports the industry standard formats for $I^2S$, left-justified or righ justified. The interface shares the same pins as the PCM interface, which means each audio bus is mutually exclusive in its usage. The internal representation of audio samples within WT32i is 16-bit and data on SD_OUT is limited to 16-bit per channel.

WT32i is not capable of generating the master clock for $I^2S$, so when configured as a master, it can only be used with a codec that is capable of producing the master clock from the SCK.

Not Recommended for New Designs

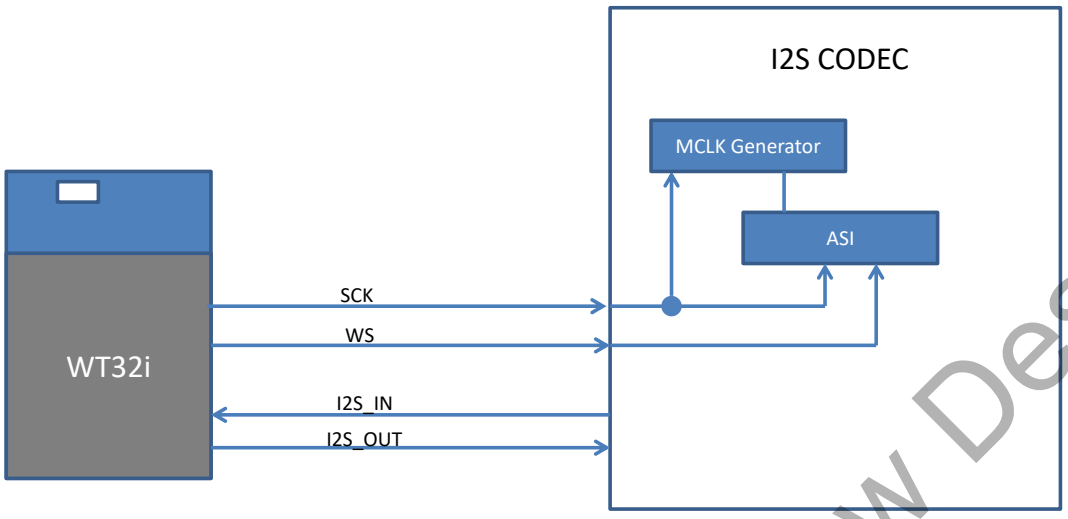


**Figure 22: I²S scheme for WT32i**

| Bit | Mask | Name | Description |
|---|---|---|---|
| D[0] | 0x0001 | CONFIG_JUSTIFY_FORMAT | 0 for left justified, 1 for right justified. |
| D[1] | 0x0002 | CONFIG_LEFT_JUSTIFY_DELAY | For left justified formats: 0 is MSB of SD data occurs in the first SCLK period following WS transition. 1 is MSB of SD data occurs in the second SCLK period. |
| D[2] | 0x0004 | CONFIG_CHANNEL_POLARITY | For 0, SD data is left channel when WS is high. For 1 SD data is right channel. |
| D[3] | 0x0008 | CONFIG_AUDIO_ATTEN_EN | For 0, 17-bit SD data is rounded down to 16bits. For 1, the audio attenuation defined in CONFIG_AUDIO_ATTEN is applied over 24bits with saturated rounding. Requires CONFIG_16_BIT_CROP_EN to be 0. |
| D[7:4] | 0x00F0 | CONFIG_AUDIO_ATTEN | Attenuation in 6dB steps. |
| D[9:8] | 0x0300 | CONFIG_JUSTIFY_RESOLUTION | Resolution of data on SD_IN, 00=16bit, 01=20bit, 10=24bit, 11=Reserved. This is required for right justified format and with left justified LSB first. |
| D[10] | 0x0400 | CONFIG_16_BIT_CROP_EN | For 0, 17-bit SD_IN data is rounded down to 16bits. For 1 only the most significant 16bits of data are received. |

**Table 22: PSKEY_DIGITAL_AUDIO_CONFIG**

Not Recommended for New Designs

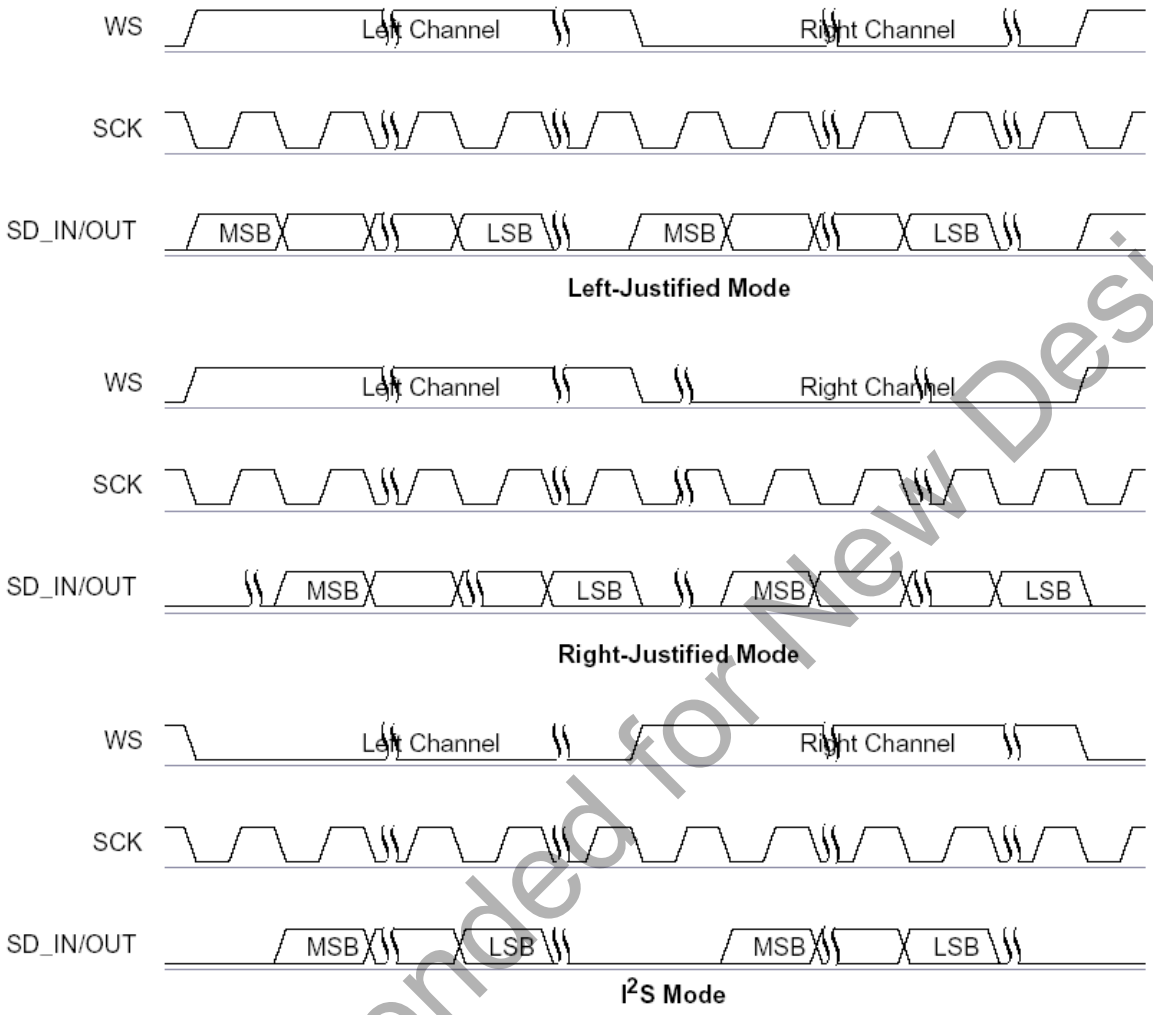


**Figure 23: Digital Audio Interface Modes**

## 10.4 IEC 60958 Interface

The IEC 60958 interface is a digital audio interface that uses bi-phase coding to minimize the DC content of the transmitted signal and allows the receiver to decode the clock information from the transmitted signal. The IEC 60958 specification is based on the 2 industry standards:

- AES/EBU
- Sony and Philips interface specification SPDIF

The interface is compatible with IEC 60958-1, IEC 60958-3 and IEC 60958-4.

The SPDIF interface signals are SPDIF_IN and SPDIF_OUT and are shared no the PCM interface pins. The input and output stages of the SPDIF pins can interface to:

- 75Ω coaxial cable with an RCA connector, see Figure 24
- An optical link that uses Toslink optical components

Not Recommended for New Designs

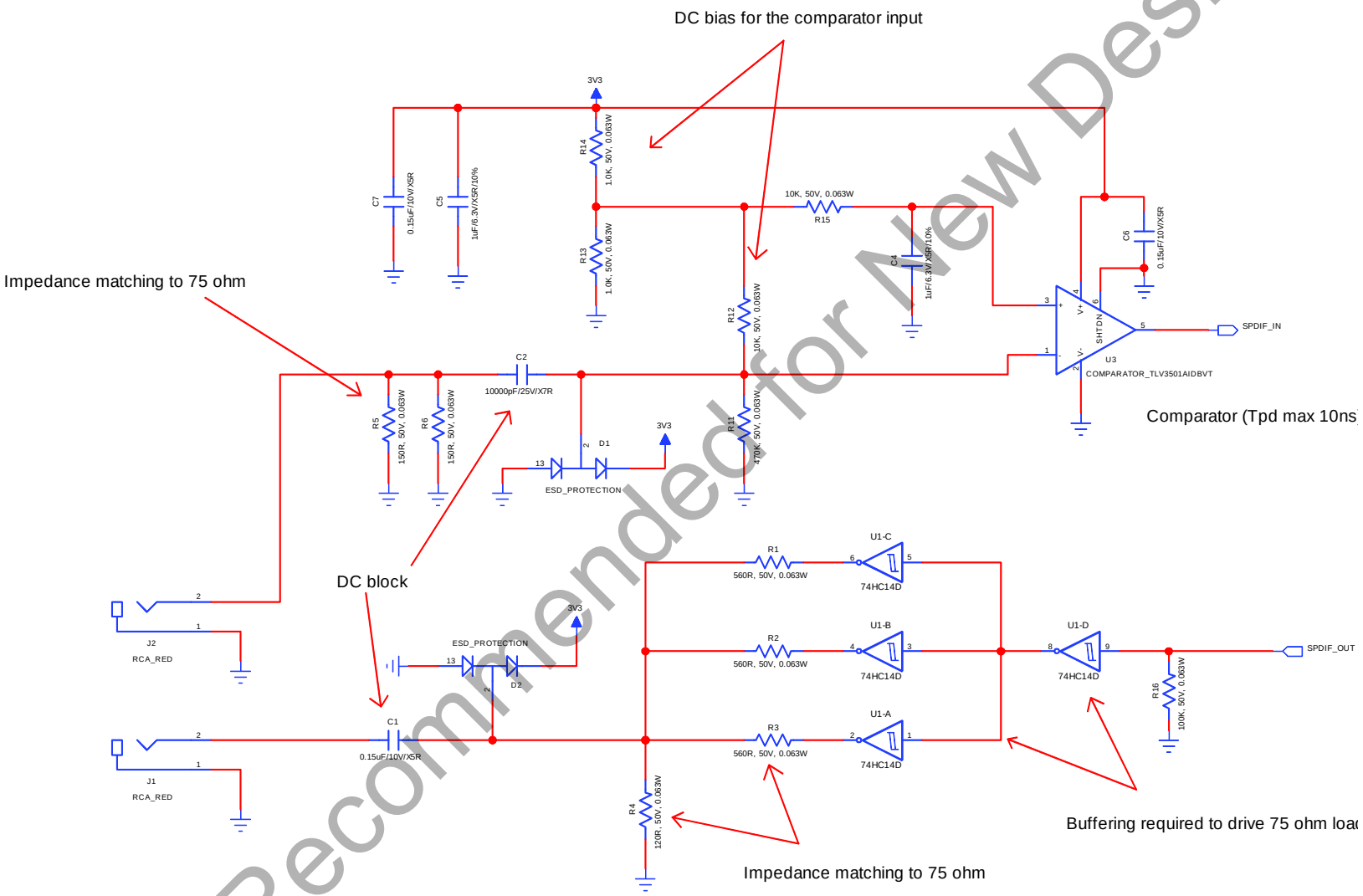


**Figure 24: Example circuit for SPDIF interface (co-axial)**

Not Recommended for New Designs

# 11 Design Guidelines

This chapter shows briefly the most important points to consider when making a design with WT32i. Please refer to the DKWT32i datasheet for detailed description of the development board design.

## 11.1 Audio Layout Guide

### 11.1.1 EMC Considerations

To avoid RF noise coupling top the audio traces it is extremely important to make sure that there aren't GND loops in the audio traces. Audio layout can not be compromised. RF noise that couples to audio signal lines usually demodulates down to audio band causing very unpleasant whining noise.

Noise couples to signals lines either through a parasitic capacitance or by coupling to a loop. The noise that couples to a loop is proportional to the area of the loop and to the electromagnetic field flowing through the loop. Thus the noise can be minimized in two ways. Minimizing the field strength flowing through the loop by placing the signal lines far from the RF source or most importantly minimize the size of the loop by keeping the trace as short as possible and making sure that the path for the return current (usually GND) is low impedance and follows the forward current all the way as close as possible. GND vias must be placed right next to the any component GND pins and solid GND plane must follow the trace all the way from start to the end. When using fully differential signals they should be routed as differential pairs, parallel and symmetrically.

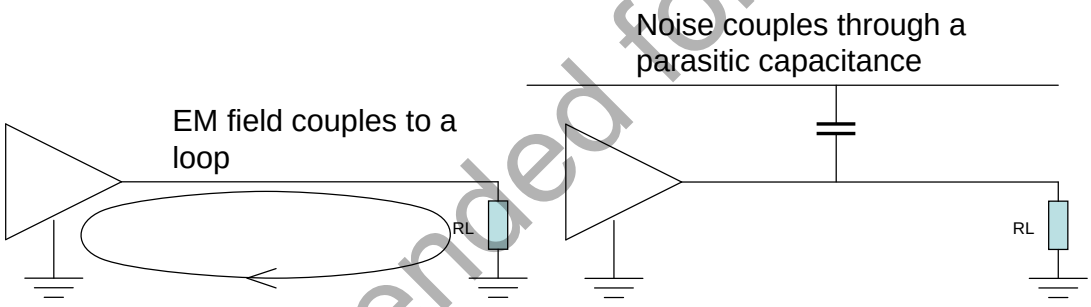


**Figure 25: Noise coupling schemes**

### 11.1.2 Choosing Capacitors and Resistors

Metal film resistors have lower noise than carbon resistors which makes them more suitable for high quality audio.

Non-linearity of capacitors within the audio path will have an impact on the audio quality at the frequencies where the impedance of the capacitors become dominant. At higher frequencies the amplitude is not determined by the value of the capacitors but at the lower frequencies the impact of the capacitors will be seen.

Ceramic capacitors should be X5R or X7R type capacitors with relative high voltage rating. The higher the capacitance value, the lower is the frequency where the non-linearity will start to have an impact. Thus it is not a bad idea to select the capacitors value bigger than necessary from the frequency response point of view.

For optimal audio quality the best selection is to use film capacitors. Film capacitors have excellent linearity and they are non-polarized which makes them perfect choice for using in audio path. The drawback of film capacitors is bigger physical size and higher cost.

Figure 26 shows a modulation distortion measurement when using different type of capacitors in the audio paths. Modulation distortion measures the amount of distortion between two closely located sine waves. The

Not Recommended for New Designs

difference between the different capacitors is obvious at low frequencies where the impedance of the capacitor is dominant.

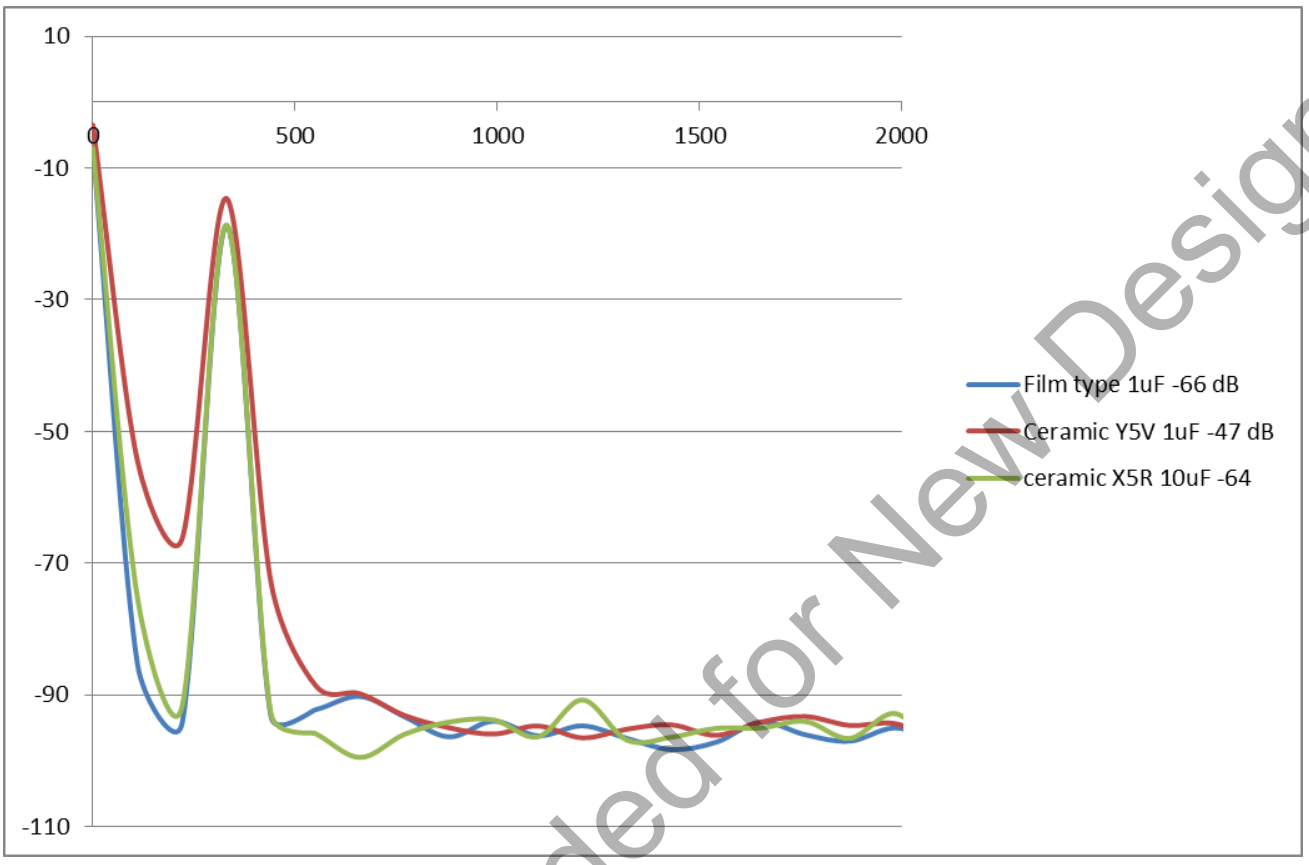


**Figure 26: Modulation distortion with different type of capacitors**

## 11.2 RF Layout Guide

The chip antenna of WT32i requires only a small metal clearance area directly under the antenna. The antenna operation is dependent on the GND planes on both sides of the antenna. Minimum 15mm of GND plane must be placed on both sides of the module and the GND plane of the motherboard must reach under the edges of the module as shown in the Figure 27.

Not Recommended for New Designs

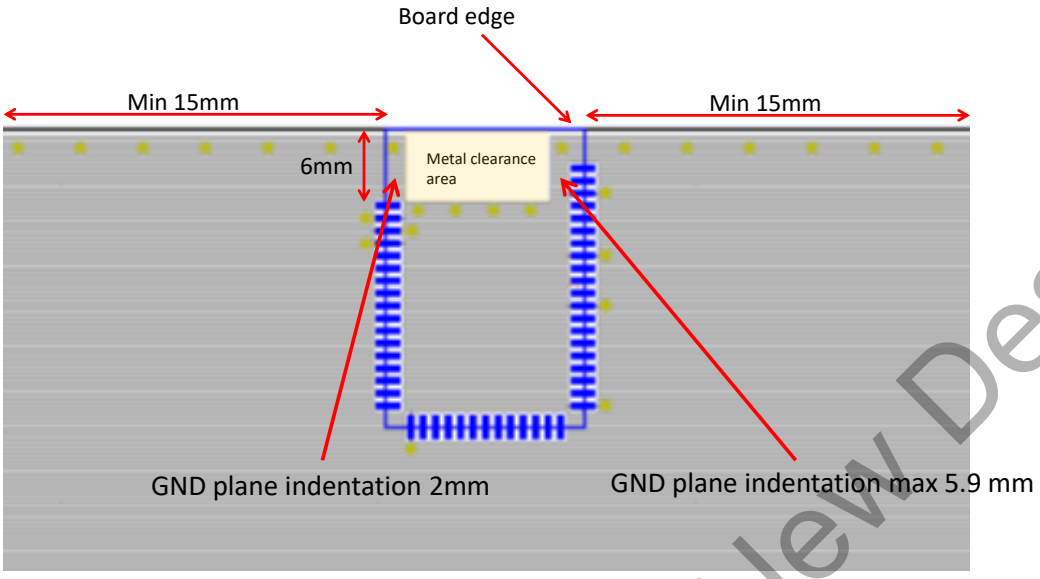


**Figure 27: Recommended layout for WT32i**

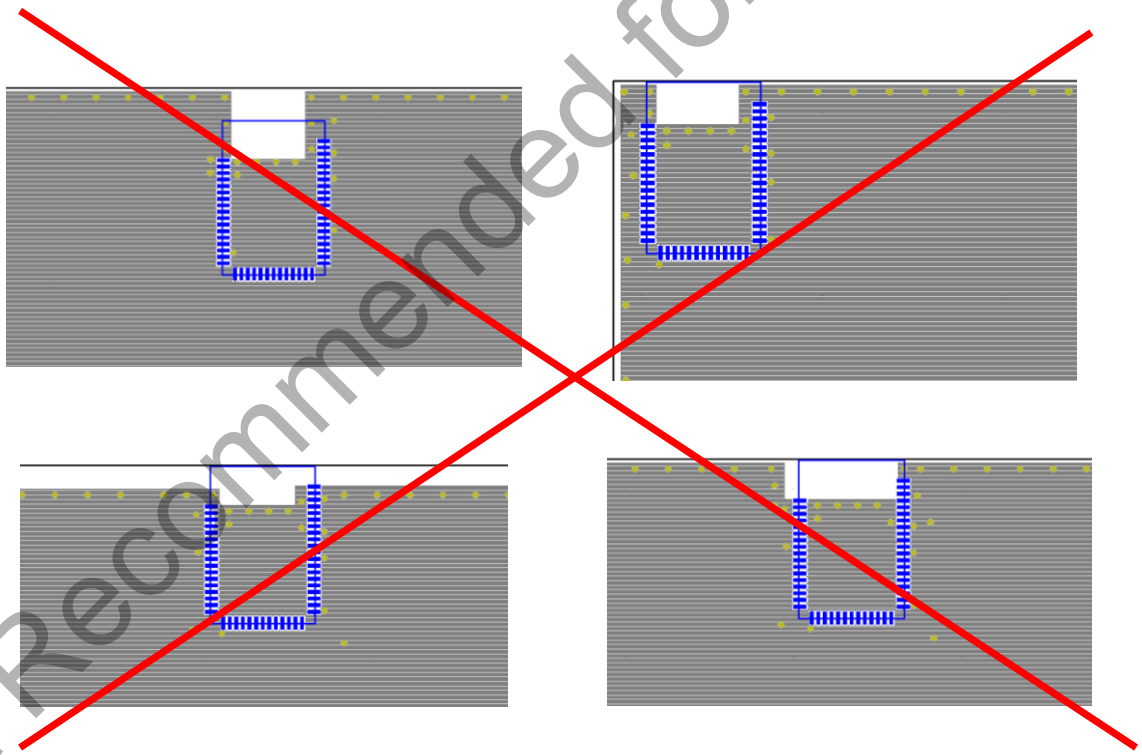

**Figure 28: Poor layouts for WT32i**

Not Recommended for New Designs

Use good layout practices to avoid excessive noise coupling to supply voltage traces or sensitive analog signal traces. If using overlapping ground planes use stitching vias separated by max 3 mm to avoid emission from the edges of the PCB. Connect all the GND pins directly to a solid GND plane and make sure that there is a low impedance path for the return current following the signal and supply traces all the way from start to the end.

A good practice is to dedicate one of the inner layers to a solid GND plane and one of the inner layers to supply voltage planes and traces and route all the signals on top and bottom layers of the PCB. This arrangement will make sure that any return current follows the forward current as close as possible and any loops are minimized.




**Figure 29:** Typical 4-layer PCB construction

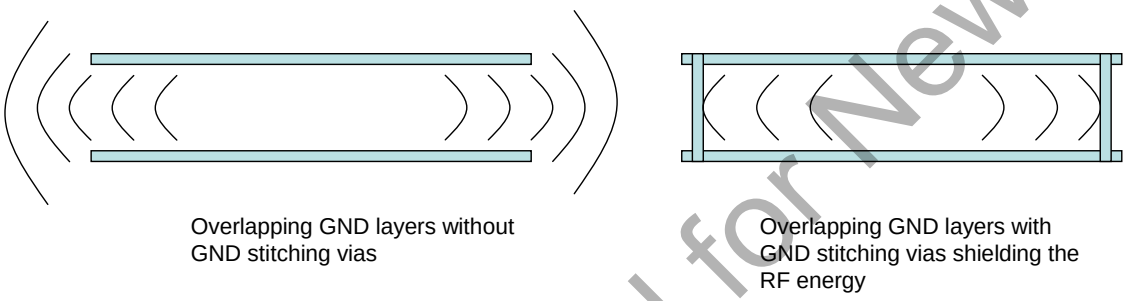


**Figure 30:** Use of stitching vias to avoid emissions from the edges of the PCB

Not Recommended for New Designs

## 11.3 Example Application Schematics

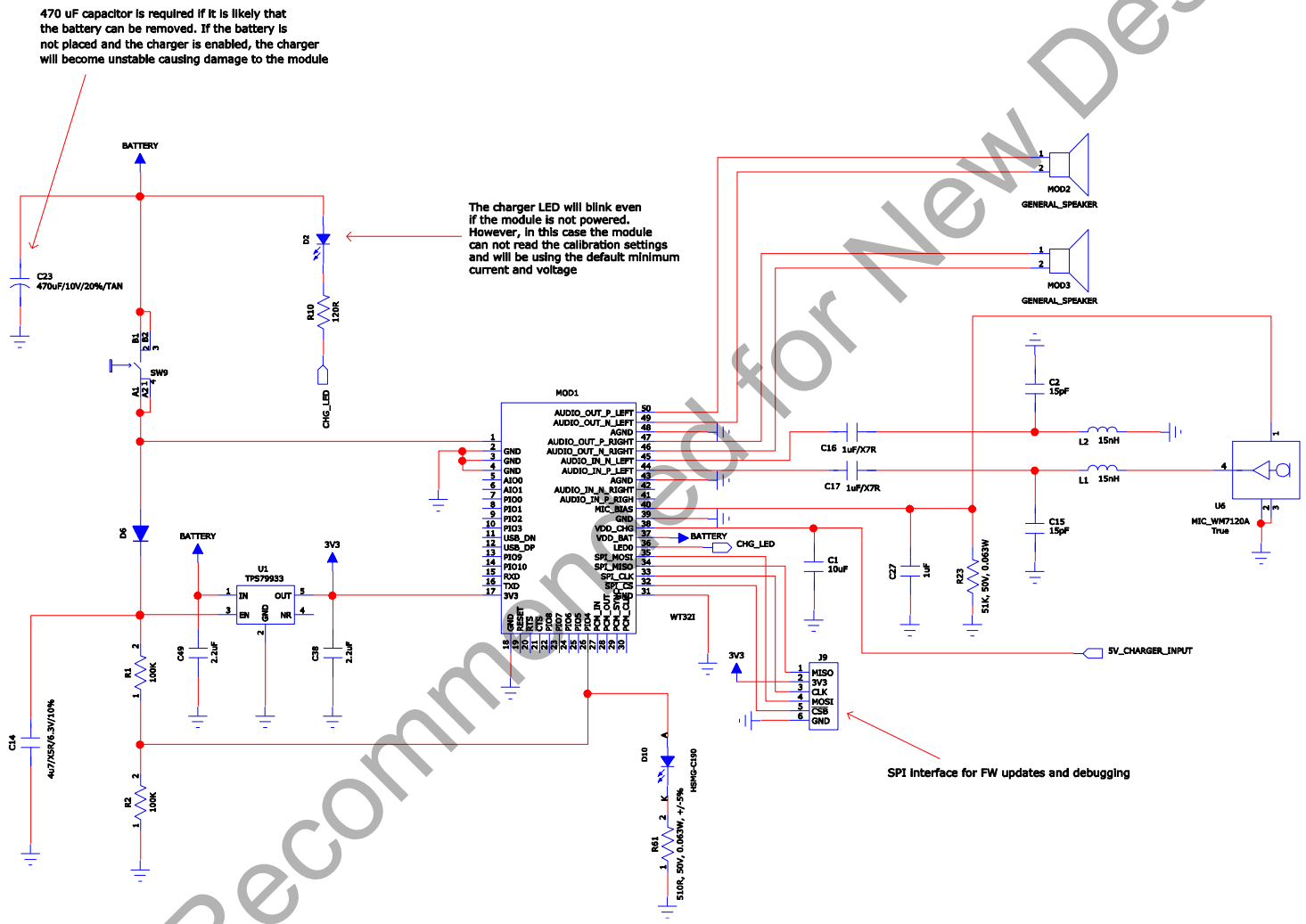


**Figure 31: Example schematic with on/off button, silicon microphone and stereo speakers**

Not Recommended for New Designs

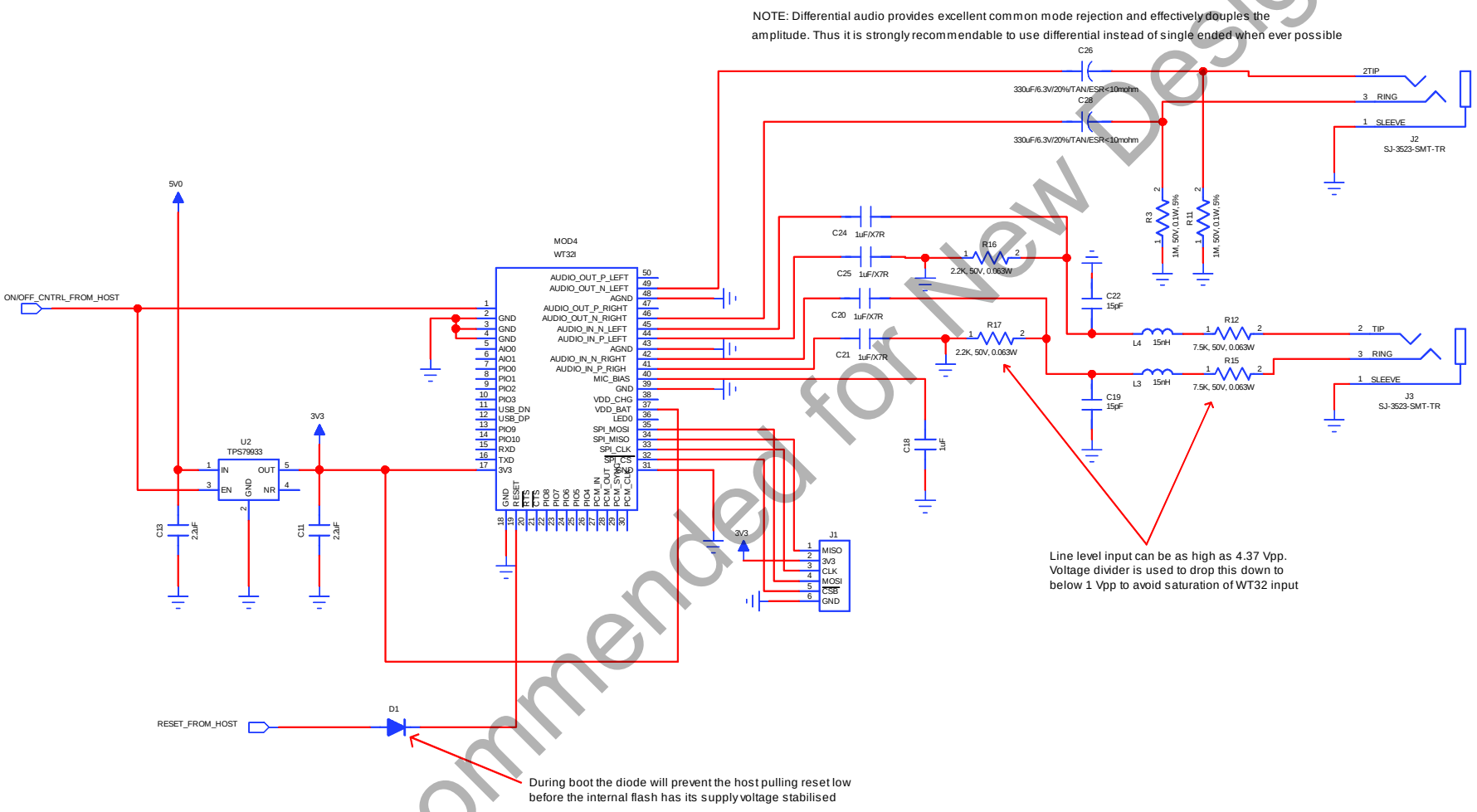


**Figure 32: Example schematic with single ended line input, single ended output and with on/off control from a host**

Not Recommended for New Designs

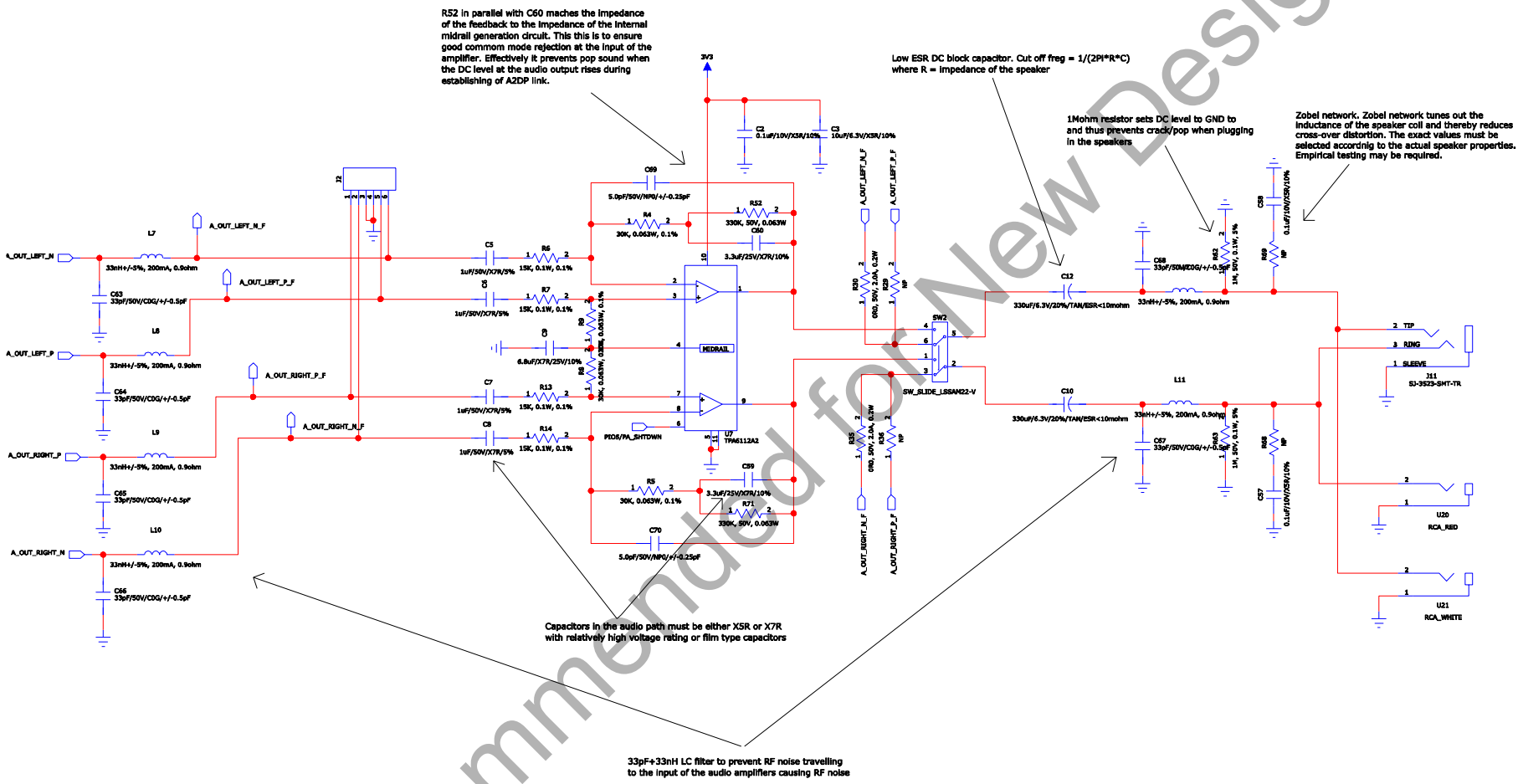


**Figure 33: Example schematic for connecting external audio PA to the stereo audio output**

Not Recommended for New Designs

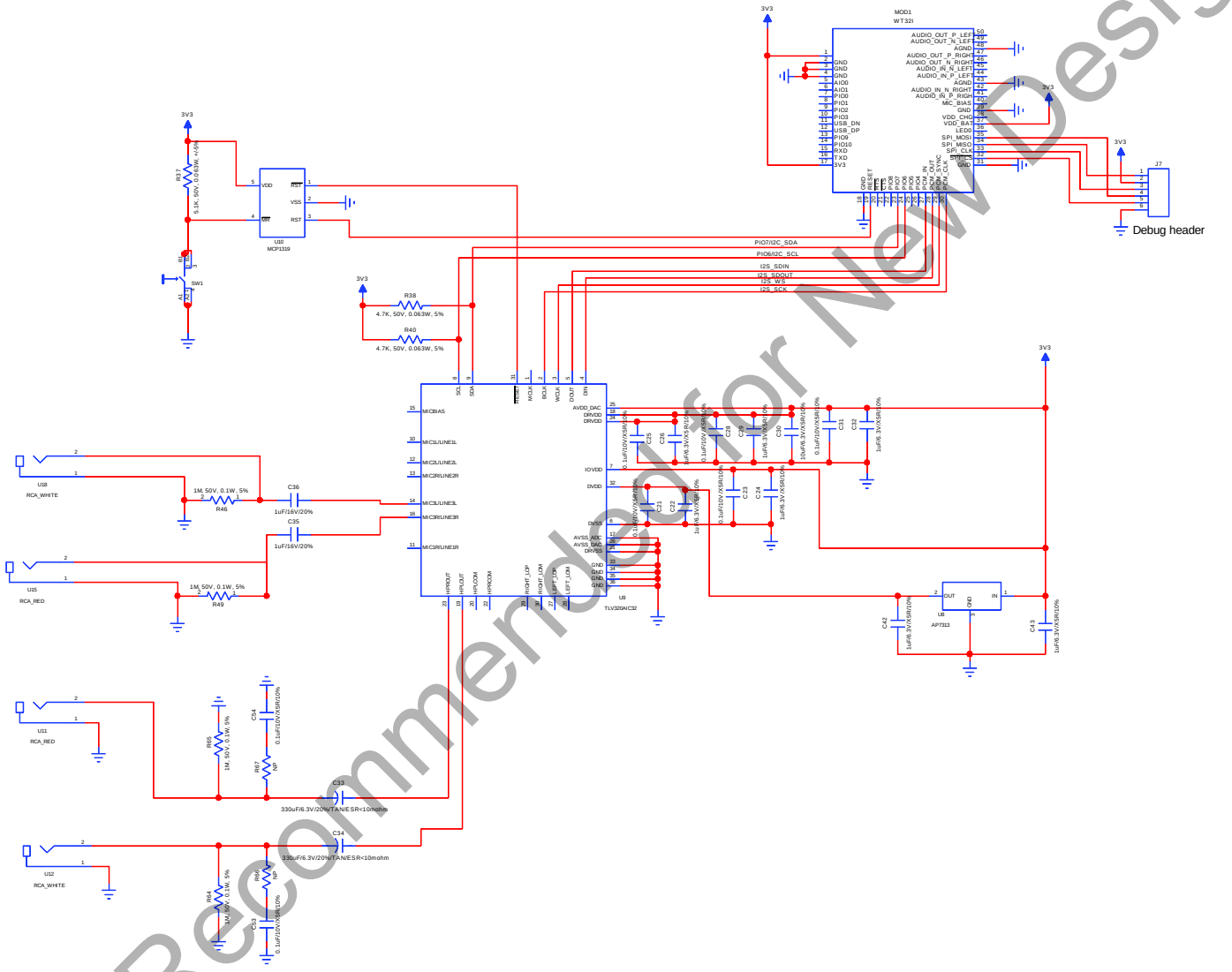


**Figure 34: Example schematic with an external I2S codec**

Not Recommended for New Designs

# 12 Physical Dimensions

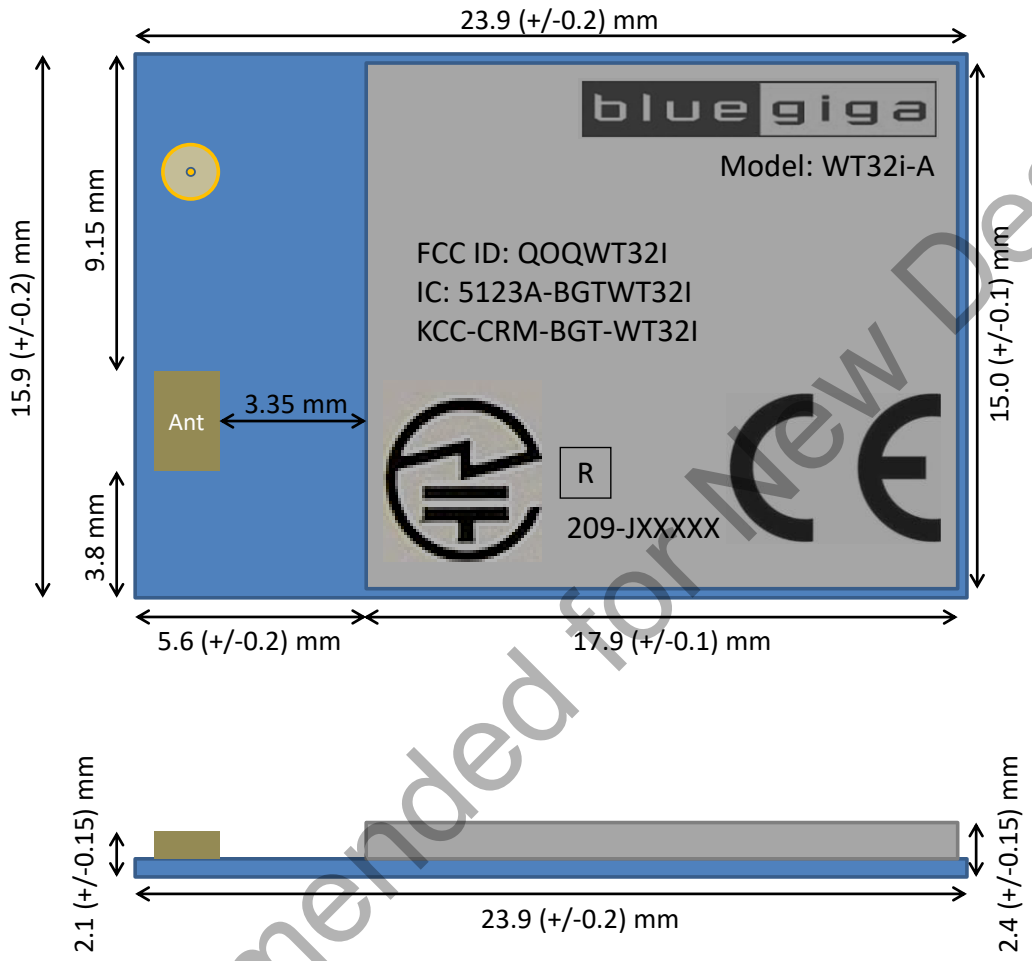


**Figure 35: Physical dimensions of WT32i**

Not Recommended for New Designs

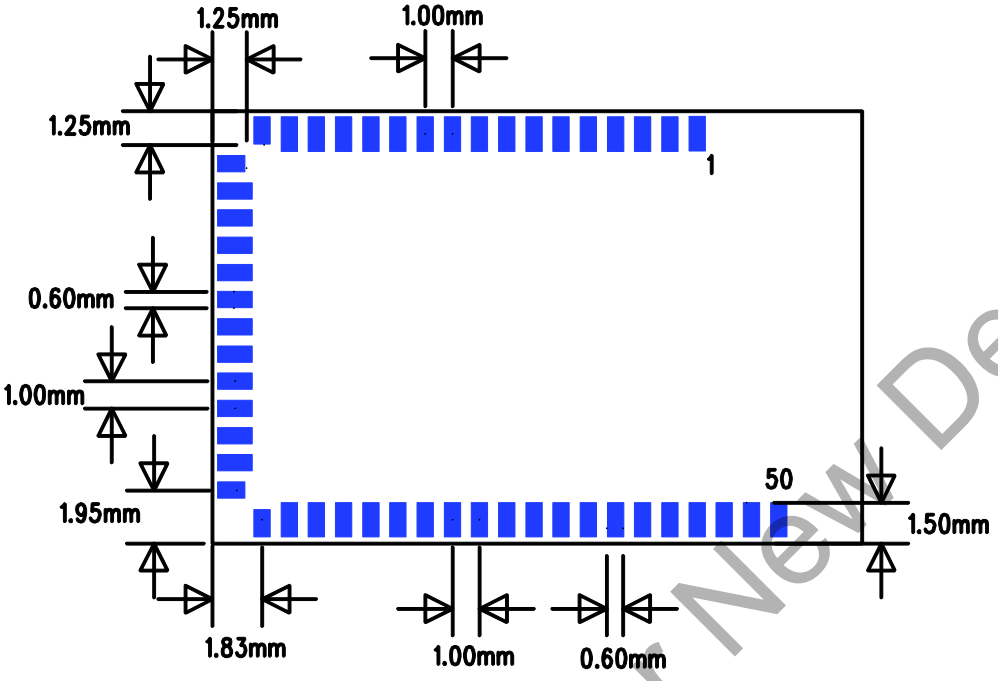


**Figure 36: Pin dimensions of WT32i, top view**

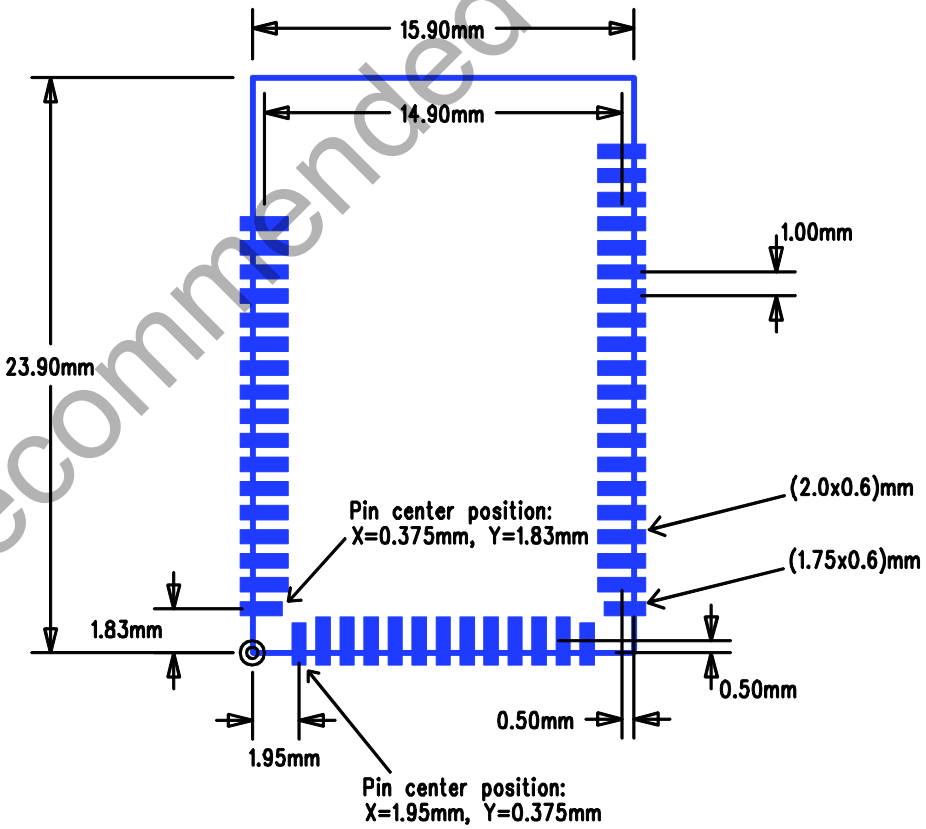


**Figure 37: Recommended PCB land pattern for WT32i**

Not Recommended for New Designs

# 13 Soldering Recommendations

WT32i is compatible with industrial standard reflow profile for Pb-free solders. The reflow profile used is dependent on the thermal mass of the entire populated PCB, heat transfer efficiency of the oven and particular type of solder paste used. Consult the datasheet of particular solder paste for profile configurations.

Bluegiga Technologies will give following recommendations for soldering the module to ensure reliable solder joint and operation of the module after soldering. Since the profile used is process and layout dependent, the optimum profile should be studied case by case. Thus following recommendation should be taken as a starting point guide.

- Refer to technical documentations of particular solder paste for profile configurations
- Avoid using more than one flow.
- Reliability of the solder joint and self-alignment of the component are dependent on the solder volume. Minimum of 150μm stencil thickness is recommended.
- Aperture size of the stencil should be 1:1 with the pad size.
- A low residue, “no clean” solder paste should be used due to low mounted height of the component.

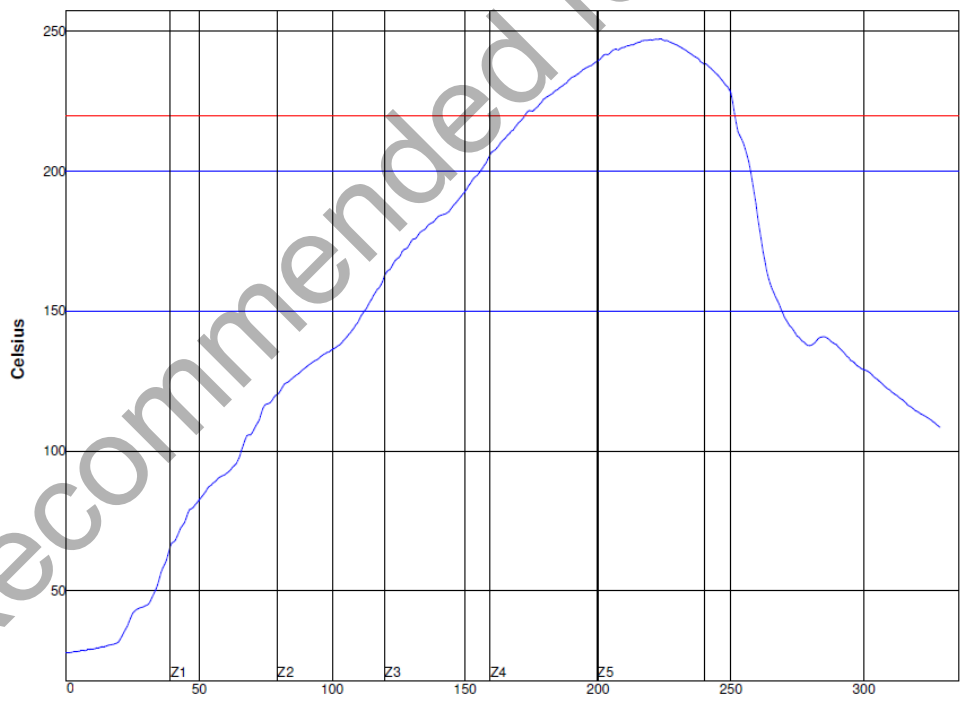


**Figure 38: Reference reflow profile**

Not Recommended for New Designs

# 14 Package

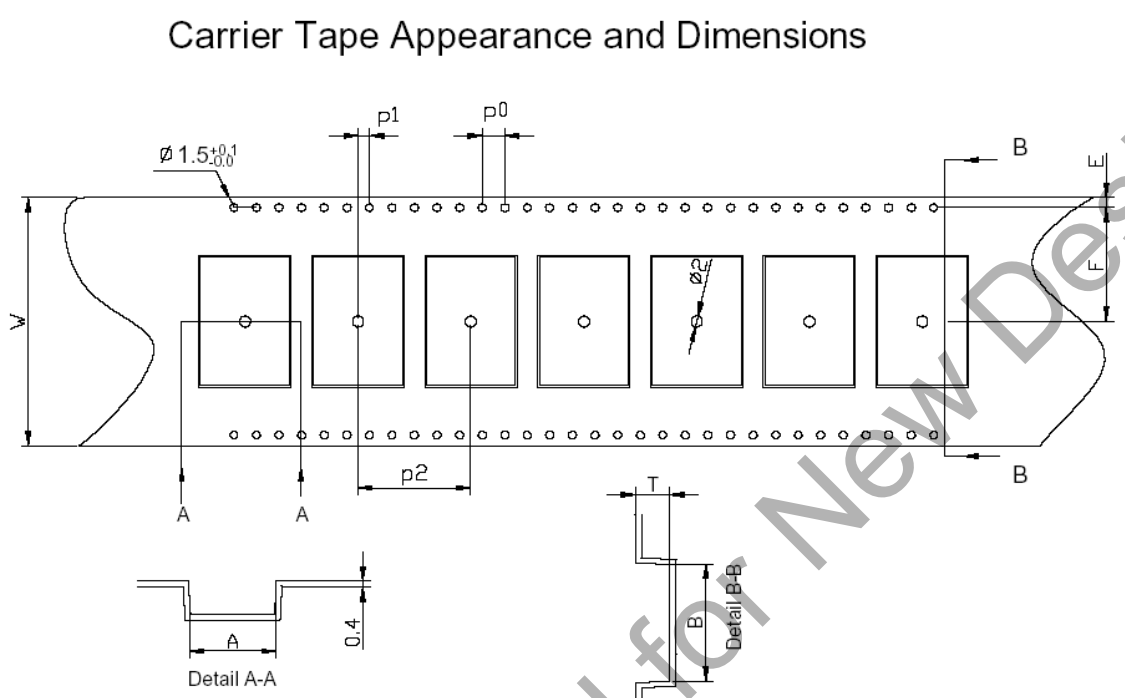


| | A | B | W | F | E | P0 | P1 | P2 | T |
|---|---|---|---|---|---|---|---|---|---|
| | 16.4 | 24.4 | 44 | 20.2 | 1.75 | 4.0 | 2.0 | 20 | 2.8 |
| | ±0.1 | ±0.1 | ±0.3 | ±0.1 | +0.1 | ±0.1 | ±0.1 | ±0.1 | ±0.1 |

NOTES:

1.10 sprocket hole pitch cumulative tolerance ±0.2mm.

2.carrier camber not to exceed 1mm in 100mm

3.A and B measured on a plane 0.3mm above the bottom of the pocket

4.T measure form 0 plane on the inside bottom of the pocket to the top surface of the carrier

5.All dimensions meet EIA-481-C requirments.

6.material: black Anti-static Polysyrene

7.Tesistivity $10^{5}$~$10^{11}$/square

**Figure 39: Carrier tape dimensions**

Not Recommended for New Designs

Reel Appearance and Dimensions

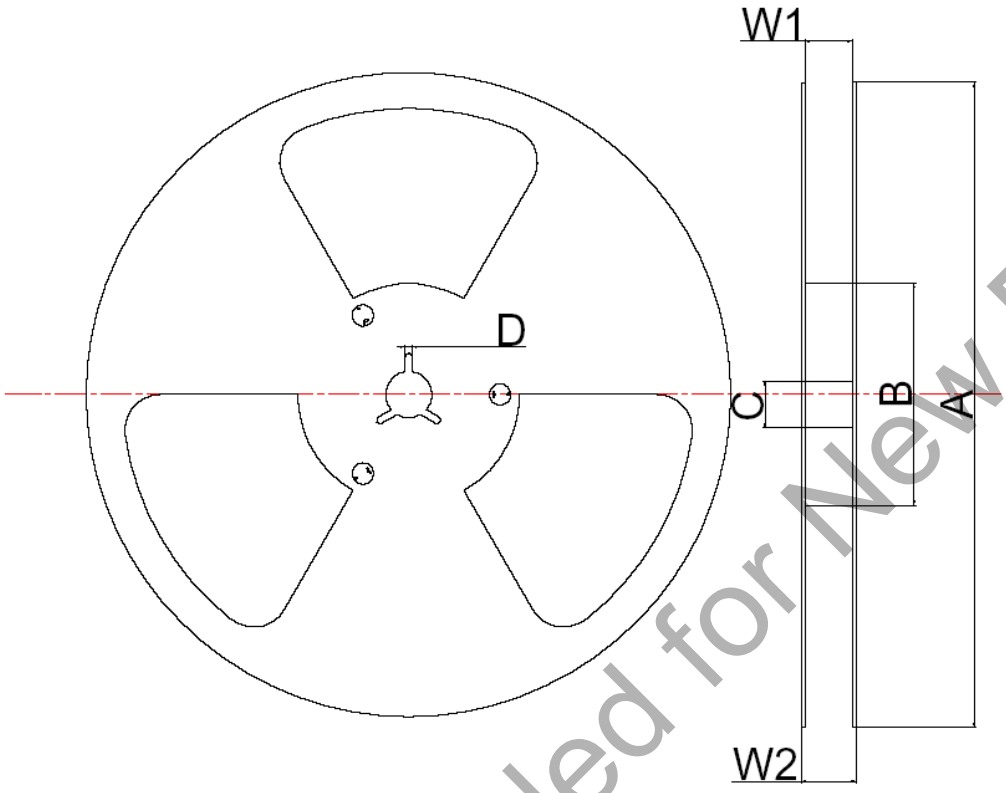


| Location | A | B | C | D | W1 | W2 |
|---|---|---|---|---|---|---|
| Dimensions | 330 | 20.2 | 13.0 | 2.2 | 40.5 | 49.1 |
| Tolerance | ±0.5 | ±1 | ±0.2 | ±0.5 | ±0.1 | ±0.2 |

NOTES:
1. MATERIAL:HIPS,ANT-STATIC $10^{5}$~$10^{11}$ OHM/SQ.
2.COLOR:BLUE

**Figure 40: Reel dimensions**

Not Recommended for New Designs

# 15 Certification Guidance for an End Product Using WT32i

## 15.1 Bluetooth End Product Listing

The Bluetooth SIG requires for every commercially available product implementing Bluetooth technology to be listed on the Bluetooth SIG End Product Listing (EPL).

For the details on how to make the end product listing, please refer to the *Bluetooth End Product Listing Guide* available in www.bluegiga.com.

## 15.2 CE Approval of an End-Product

When placing the CE logo to an end-product the manufacturer declares that the product is in conformity with the requirements of the R&TTE directive. The minimum requirements for placing the CE logo to an end-product are

- Declaration of Conformity signed by the manufacturer. The person who signs the DoC must be traceable
- Generation of a technical construction file including
    - Technical information about the product
    - Test reports for all the relevant standards required to demonstrate that the product meets the requirements of the R&TTE directive

The end-product manufacturer is fully responsible for the compliance of the end-product. The modules test reports can partly be used to demonstrate the compliance but typically all the radiated tests must be re-tested with the end product. All the conducted RF tests can be inherited from the modules test reports because the conducted RF characteristics are not dependent on the installation of the module.

| Standard | Description | Tested with the module | Test required for the end product | Modules test results can be inherited to the end product test report |
|---|---|---|---|---|
| EN 300 328 | RF emissions | Module fully tested | Radiated test cases | Yes (partly) |
| EN 301 489-1<br>EN 301 489-17 | EMC immunity and emissions | Only EM field immunity tested | All the test cases relevant for the end product | No |
| EN 62479 | Human exposure to EM fields | Not tested. The module is compliant without testing because the TX power is less than 20 mW | Evaluation required in case of multiple radios in co-location. | No |
| EN 60950 | Safety | Not tested because there aren't any test cases that would concern the module | Full evaluation with the end product | No |

**Table 23: CE standards summary for WT32i**

Not Recommended for New Designs

*Note: Because all the radiated emissions must be tested with the end product in any case and because the end product manufacturer is fully responsible for the compliance of the end product, any antenna can be selected for WT32i-E, not just the antenna type that Bluegiga has used in the CE approvals.*

## 15.3 FCC Certification of an End Product

In FCC there are three different levels of product authorization:

- VERIFICATION
    - Required for digital devices. The end product manufacturer verifies device to FCC rules by performing the required tests and maintains the records in case of questions
- DECLARATION OF CONFORMITY
    - Required for computer peripherals and receivers. The product manufacturer tests the emissions in a FCC recognized lab according to the relevant standards, maintains the records in case of questions and creates DoC which is supplied with the device. FCC logo must be placed on the product. The information about the DoC is shown in the user manual
- CERTIFICATION
    - Required for most of the radio products. The radio has its own FCC ID and gets listed in FCC files https://apps.fcc.gov/oetcf/eas/reports/GenericSearch.cfm. The FCC ID is labeled on the product.

When using modular certified module, re-certification with the end product is not needed provided that the conditions shown in the modules grant are fulfilled. The end product manufacturer is still responsible for the DoC or the Verification of the end product as required.

The limitations and restrictions related to the modular certification of WT32i are described in the FCC grant of the module. If the conditions mentioned in the grant are met, then only labelling the end product with "Contains: QOQWT32I" is required.

If the conditions are not met, then there are three options to remove the restriction for the end product:

- Class 2 Permissive Change
    - Can be done either by Bluegiga or an agent authorized by Bluegiga.
    - The FCC ID of WT32i remains unchanged and the end product labelling requirements do not change
- Change of ID
    - Can be done by authorization of Bluegiga
    - The FCC ID of WT32i is changed.
    - The end product is labelled according to the new FCC ID of the module ("Contains: XXXYYYY")
    - NOTE: Bluegiga will not deliver modules with custom labelling.
- New certification of the end product
    - Done by the end product manufacturer
    - Test reports of the module can be used to reduce the amount of testing

When using WT32i-E, only the antenna types approved with the module can be used. WT32i-E is certified with a standard 2 dBi dipole. Any other type of antenna will require authorisation either through C2PC, Change of ID or new certification.

Not Recommended for New Designs

### 15.3.1 Co-location with Other Transmitters

Co-location means co-transmission, not physical co-location. The radios are not considered to be in colocation when the physical separation is more than 20 cm or if the transmissions overlap less than 30 seconds.

When two or more radios are in co-location human exposure must be evaluated as the sum of TX powers from all the radios transmitting simultaneously. The FCC grant of WT32i does not allow co-location so it will require authorization through C2PC, Change of ID or a new certification.

## 15.4 IC Certification of an End Product

IC certification is much like FCC. In IC there are two types of product authorizations:

- Verification
- Certification

When using a modular certified WT32i all that is needed, provided that WT32i is the only radio in the design, is labelling the end product with “Contains IC: 5123ABGTWT32I”. The responsibility for the radio certification remains with Bluegiga but the end product manufacturer is still responsible for the verification of the remaining parts of the product.

Two main differences that are good to be aware of are:

- If the TX power is less than 20 mW human exposure evaluation is not required
- The test reports are valid for 1 year from the certification

## 15.5 MIC Japan Certification of an End Product

WT32i has MIC Japan type certification and it can be used directly in the end product without need for recertification of the end product. Currently there aren’t any labelling requirements for an end product using a certified module but it is recommended to place some indication to the product that it contains certified radio module.

# 16 WT32i Certifications

## 16.1 Bluetooth

WT32i is qualified as a Bluetooth 3.0 Controller Subsystem with QDID 49552. By combining with a prequalified Host Subsystem WT32i will make a complete Bluetooth end product without any further testing.

Listing an end product will require purchasing a declaration ID from Bluetooth SIG. Declaration ID is required only for certain combination of QDID’s and it is only needed to pay once. After receiving the declaration ID, multiple products can be listed with the same combination of QDID’s under the same declaration ID. If one of the QDID’s under the Declaration ID is changed, then new declaration ID will be required.

## 16.2 CE

WT32i is in conformity with the essential requirements and other relevant requirements of the R&TTE Directive (1999/5/EC). The product is conformity with the following standards and/or normative documents.

- EMC (immunity only) EN 301 489-17 V2.1.1
- Radiated emissions EN 300 328 V1.8.1

Not Recommended for New Designs

- Safety EN60950-1:2006+A11:2009+A1:2010+A12:2011

## 16.3 FCC

WT32i complies with Part 15 of the FCC Rules. Operation is subject to the following two conditions:

(1) this device may not cause harmful interference, and

(2) this device must accept any interference received, including interference that may cause undesired operation.

Any changes or modifications not expressly approved by Bluegiga Technologies could void the user's authority to operate the equipment.

**FCC RF Radiation Exposure Statement:**

This equipment complies with FCC radiation exposure limits set forth for an uncontrolled environment. End users must follow the specific operating instructions for satisfying RF exposure compliance. This transmitter meets both portable and mobile limits as demonstrated in the RF Exposure Analysis. This transmitter must not be co-located or operating in conjunction with any other antenna or transmitter except in accordance with FCC multi-transmitter product procedures.

**OEM Responsibilities to comply with FCC Regulations**

The WT32i module has been certified for integration into products only by OEM integrators under the following condition:

- The transmitter module must not be co-located or operating in conjunction with any other antenna or transmitter except in accordance with FCC multi-transmitter product procedures.

As long as the two conditions above are met, further transmitter testing will not be required. However, the OEM integrator is still responsible for testing their end-product for any additional compliance requirements required with this module installed (for example, digital device emissions, PC peripheral requirements, etc.).

**IMPORTANT NOTE:** In the event that these conditions can not be met (for certain configurations or co-location with another transmitter), then the FCC and Industry Canada authorizations are no longer considered valid and the FCC ID and IC Certification Number can not be used on the final product. In these circumstances, the OEM integrator will be responsible for re-evaluating the end product (including the transmitter) and obtaining a separate FCC and Industry Canada authorization.

**If detachable antennas are used:**

This radio transmitter has been approved by FCC to operate with a 2.7 dBi dipole antenna. Any antenna of the same type and with equal or less gain can be used with WT32i-E without retesting. Antennas of a different type or higher gain will require authorization from FCC.

**End Product Labeling**

The WT32i module is labeled with its own FCC ID. If the FCC ID is not visible when the module is installed inside another device, then the outside of the device into which the module is installed must also display a label referring to the enclosed module. In that case, the final end product must be labeled in a visible area with the following:

Not Recommended for New Designs

"**Contains Transmitter Module FCC ID: QOQWT32I**"

or

"**Contains FCC ID: QOQWT32I**"

The OEM integrator has to be aware not to provide information to the end user regarding how to install or remove this RF module or change RF related parameters in the user manual of the end product

## 16.4 IC

### IC Statements:

WT32i complies with Industry Canada licence-exempt RSS standard(s). Operation is subject to the following two conditions: (1) this device may not cause interference, and (2) this device must accept any interference, including interference that may cause undesired operation of the device.

Under Industry Canada regulations, this radio transmitter may only operate using an antenna of a type and maximum (or lesser) gain approved for the transmitter by Industry Canada. To reduce potential radio interference to other users, the antenna type and its gain should be so chosen that the equivalent isotropically radiated power (e.i.r.p.) is not more than that necessary for successful communication.

**End Product Labeling**

The WT32i module is labeled with its own IC Certification Number. If the IC Certification Number is not visible when the module is installed inside another device, then the outside of the device into which the module is installed must also display a label referring to the enclosed module. In that case, the final end product must be labeled in a visible area with the following:

"**Contains Transmitter Module IC: 5123A-BGTWT32I**"

or

"**Contains IC: 5123A-BGTWT32I**"

The OEM integrator has to be aware not to provide information to the end user regarding how to install or remove this RF module or change RF related parameters in the user manual of the end product

**If detachable antennas are used:**

This radio transmitter (identify the device by certification number, or model number ifCategory II) has been approved by Industry Canada to operate 2.7 dBi dipole antenna. Antenna types other than this, having a gain greater than 2.7 dBi, are strictly prohibited for use with this device.

### 16.4.1 IC

### Déclaration d'IC :

Ce dispositif est conforme aux normes RSS exemptes de licence d'Industrie Canada. Son fonctionnement est assujetti aux deux conditions suivantes : (1) ce dispositif ne doit pas provoquer de perturbation et (2) ce

Not Recommended for New Designs

dispositif doit accepter toute perturbation, y compris les perturbations qui peuvent entraîner un fonctionnement non désiré du dispositif.

Selon les réglementations d'Industrie Canada, cet émetteur radio ne doit fonctionner qu'avec une antenne d'une typologie spécifique et d'un gain maximum (ou inférieur) approuvé pour l'émetteur par Industrie Canada. Pour réduire les éventuelles perturbations radioélectriques nuisibles à d'autres utilisateurs, le type d'antenne et son gain doivent être choisis de manière à ce que la puissance isotrope rayonnée équivalente (P.I.R.E.) n'excède pas les valeurs nécessaires pour obtenir une communication convenable.

**Étiquetage du produit final**

Le module WT32I est étiqueté avec sa propre identification FCC et son propre numéro de certification IC. Si l'identification FCC et le numéro de certification IC ne sont pas visibles lorsque le module est installé à l'intérieur d'un autre dispositif, la partie externe du dispositif dans lequel le module est installé devra également présenter une étiquette faisant référence au module inclus. Dans ce cas, le produit final devra être étiqueté sur une zone visible avec les informations suivantes :

**« Contient module émetteur IC : 5123A-BGTWT32I »**

ou

**« Contient IC : 5123A-BGTWT32I »**

Dans le guide d'utilisation du produit final, l'intégrateur OEM doit s'abstenir de fournir des informations à l'utilisateur final portant sur les procédures à suivre pour installer ou retirer ce module RF ou pour changer les paramètres RF.

## 16.5 MIC Japan

WT32i is has MIC Japan type approval with certification number 209-J00089. WT32i is certified as a module and it can be integrated into an end product without a need for additional MIC radio certification of the end product.

## 16.6 KCC (South-Korea)

WT32i has modular certification in South-Korea with certification ID MSIP-CRM-BGT-WT32i

## 16.7 Qualified Antenna Types for WT32i-E

This device has been designed to operate with a 2.7 dBi dipole antenna. Any antenna of the same type and the same or less gain can be used without additional application to FCC.

Not Recommended for New Designs




## Simplicity Studio

One-click access to MCU and wireless tools, documentation, software, source code libraries & more. Available for Windows, Mac and Linux!

Not Recommended for New Designs

**IoT Portfolio**
*www.silabs.com/IoT*

**SW/HW**
*www.silabs.com/simplicity*

**Quality**
*www.silabs.com/quality*

**Support and Community**
*community.silabs.com*

**Disclaimer**

Silicon Labs intends to provide customers with the latest, accurate, and in-depth documentation of all peripherals and modules available for system and software implementers using or intending to use the Silicon Labs products. Characterization data, available modules and peripherals, memory sizes and memory addresses refer to each specific device, and "Typical" parameters provided can and do vary in different applications. Application examples described herein are for illustrative purposes only. Silicon Labs reserves the right to make changes without further notice to the product information, specifications, and descriptions herein, and does not give warranties as to the accuracy or completeness of the included information. Without prior notification, Silicon Labs may update product firmware during the manufacturing process for security or reliability reasons. Such changes will not alter the specifications or the performance of the product. Silicon Labs shall have no liability for the consequences of use of the information supplied in this document. This document does not imply or expressly grant any license to design or fabricate any integrated circuits. The products are not designed or authorized to be used within any FDA Class III devices, applications for which FDA premarket approval is required or Life Support Systems without the specific written consent of Silicon Labs. A "Life Support System" is any product or system intended to support or sustain life and/or health, which, if it fails, can be reasonably expected to result in significant personal injury or death. Silicon Labs products are not designed or authorized for military applications. Silicon Labs products shall under no circumstances be used in weapons of mass destruction including (but not limited to) nuclear, biological or chemical weapons, or missiles capable of delivering such weapons. Silicon Labs disclaims all express and implied warranties and shall not be responsible or liable for any injuries or damages related to use of a Silicon Labs product in such unauthorized applications.

**Trademark Information**

Silicon Laboratories Inc.® , Silicon Laboratories®, Silicon Labs®, SiLabs® and the Silicon Labs logo®, Bluegiga®, Bluegiga Logo®, Clockbuilder®, CMEMS®, DSPLL®, EFM®, EFM32®, EFR, Ember®, Energy Micro, Energy Micro logo and combinations thereof, "the world's most energy friendly microcontrollers", Ember®, EZLink®, EZRadio®, EZRadioPRO®, Gecko®, ISOmodem®, Precision32®, ProSLIC®, Simplicity Studio®, SiPHY®, Telegesis, the Telegesis Logo®, USBXpress® and others are trademarks or registered trademarks of Silicon Labs. ARM, CORTEX, Cortex-M3 and THUMB are trademarks or registered trademarks of ARM Holdings. Keil is a registered trademark of ARM Limited. All other products or brand names mentioned herein are trademarks of their respective holders.

SILICON LABS

**Silicon Laboratories Inc.**
**400 West Cesar Chavez**
**Austin, TX 78701**
**USA**

**http://www.silabs.com**