

ONLINE DATA SHEET
www.mysick.com

Photoelectric sensors
W2 Flat, Photoelectric proximity sensor, energetic

WT2F-P280



SICK
Sensor Intelligence.

SICK
Sensor Intelligence.

Photoelectric sensors
W2 Flat, Photoelectric proximity sensor, energetic

Type > WT2F-P280
Part No. > 6030574





Illustration may differ

At a glance

- V-optic sensor with fixed sensing ranges of 9 mm or 18 mm for detecting transparent and glossy objects
- Energetic proximity sensor with fixed sensing ranges of 34 or 115 mm
- Rugged housing with metal sleeves for 2 mm fixing screws included with delivery
- 0.5 ms response time
- IP 67 enclosure rating
- Red light

Your benefits

- Variants with V-optics reliably detect transparent and glossy objects, resulting in a low-cost application solution - even for demanding applications
- Smart, optimal design fits into small spaces, providing increased application flexibility
- Sensors with four fixed sensing ranges provides a wide range of application options
- Quick and easy installation since sensors can be mounted directly to the machine

Features

Sensor/detection principle:	Photoelectric proximity sensor, energetic
Dimensions (W x H x D):	14 mm x 19.5 mm x 3.5 mm
Housing design (light emission):	Rectangular
Sensing range max.:	4 mm ... 115 mm [1]
Sensing range:	4 mm ... 115 mm [2]
Type of light:	Visible red light
Light source:	LED [3]
Wave length:	660 nm
Focus adjustable:	-

[1] [2] Object with 90 % reflectance (referred to standard white, DIN 5033) [3] Average service life: 100,000 h at T_U = +25 °C

Mechanics/electronics

Supply voltage:	12 V DC ... 24 V DC [1]
Ripple:	≤ 5 Vpp [2]
Output type:	PNP
Switching mode:	Light switching
Output current Imax.:	≤ 50 mA
Response time:	≤ 0.5 ms [3]

© SICK AG. Subject to change without notice.

Switching frequency:	1,000 Hz [4]
Connection type:	Cable with connector M8, 3-pin, 200 mm [5]
Cable material:	PVC
Cable diameter:	2.4 mm
Circuit protection:::	A, C, D [6] [7] [8]
Weight:	20 g
Polarisation filter:	-
Special device:	-
Reverse polarity protection:	✓
Short-circuit protection:	✓
Optics material:	PC
Enclosure rating:	IP 67
Ambient operating temperature:	-20 °C ... +55 °C
Ambient storage temperature:	-40 °C ... +75 °C
Signal voltage PNP HIGH/LOW:	Approx. VS - 1.8 V / 0 V
Signal voltage NPN HIGH/LOW:	Approx. VS / < 1.8 V
Housing material:	Plastic, PC

[1] +- 10 % [2] May not exceed or fall below U_V tolerances [3] Signal transit time with resistive load [4] With light/dark ratio 1:1 [5] Do not bend below 0 °C [6] A = V_S connections reverse-polarity protected [7] C = interference suppression [8] D = outputs overcurrent and short-circuit protected

Dimensional drawing

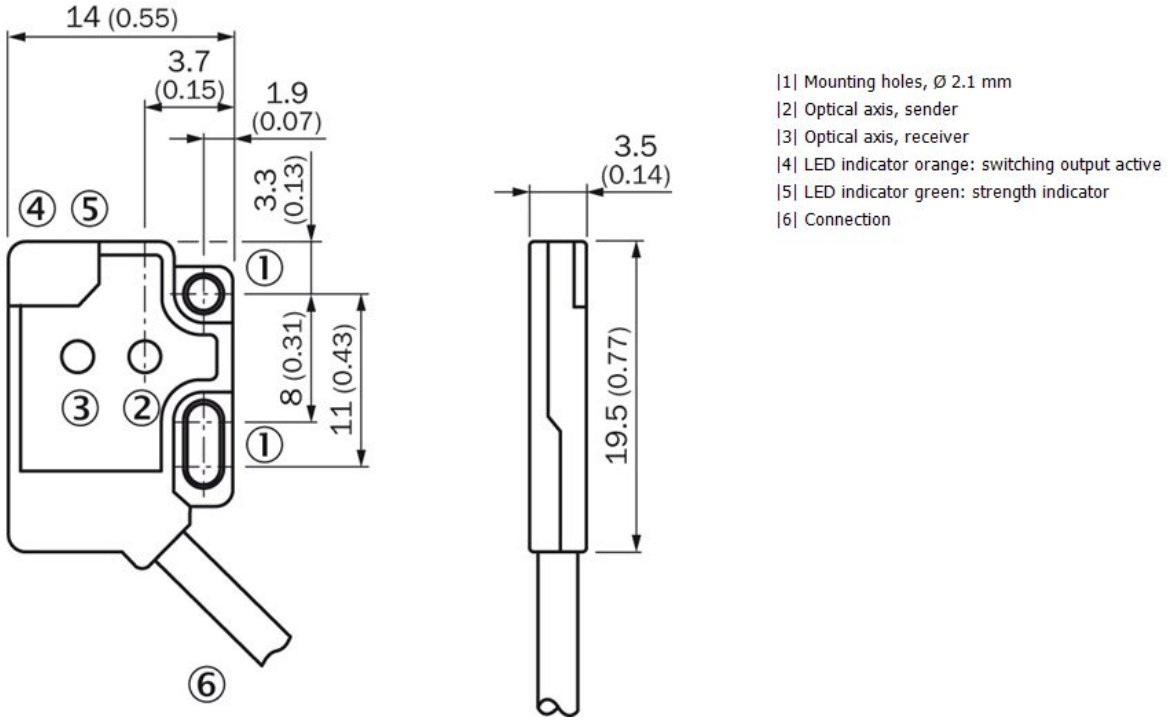

© SICK AG. Subject to change without notice.

Connection diagram

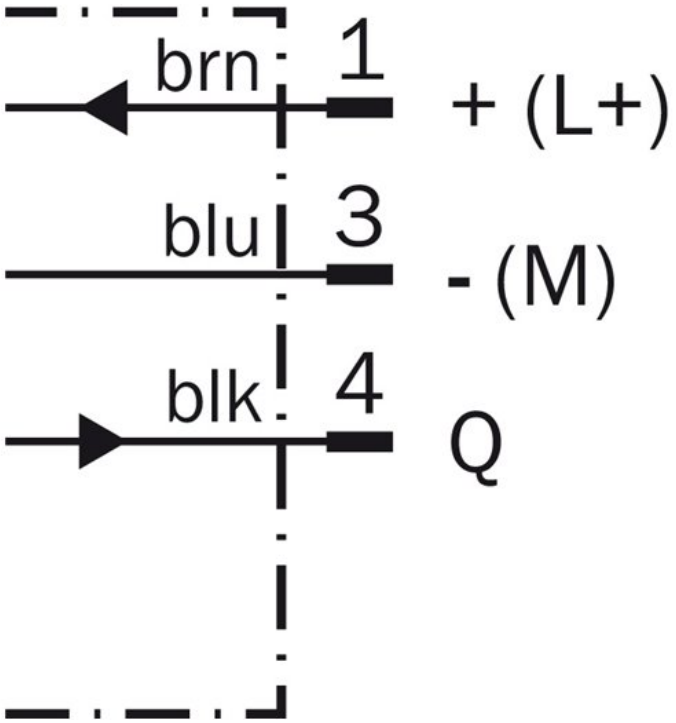

Characteristic curve

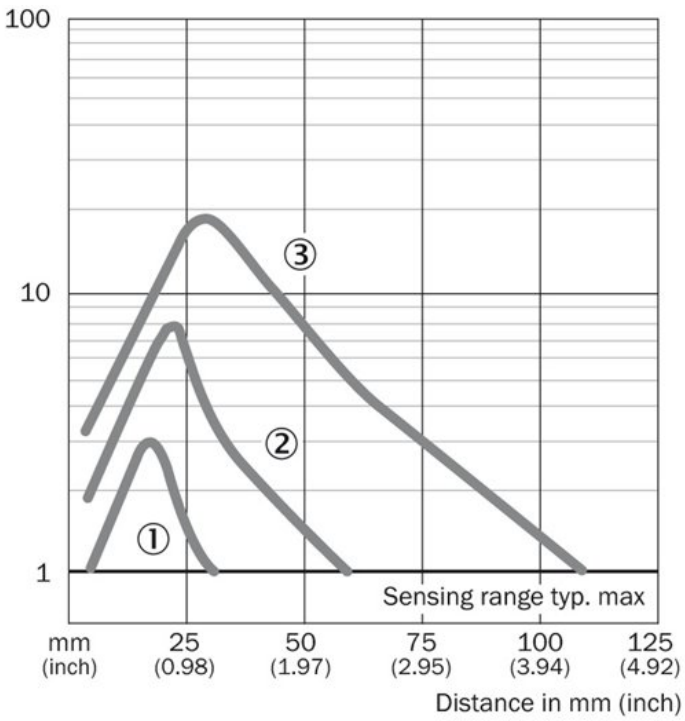

|1| Sensing range on black, 6 % remission
|2| Sensing range on gray, 18 % remission
|3| Sensing range on white, 90 % remission

© SICK AG. Subject to change without notice.

Sensing range diagram

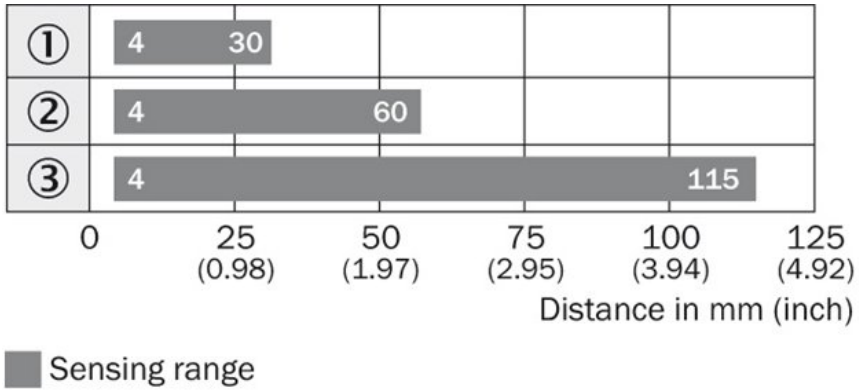

① Sensing range on black, 6 % remission
② Sensing range on gray, 18 % remission
③ Sensing range on white, 90 % remission

Connection type

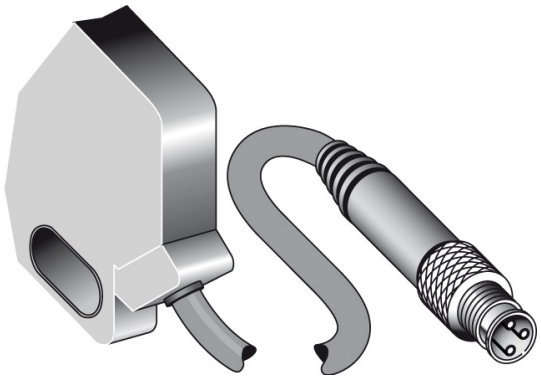

© SICK AG. Subject to change without notice.

A4 4c int43

Australia
Phone +61 3 9457 0600
1800 33 48 02 – tollfree
E-Mail sales@sick.com.au

Belgium/Luxembourg
Phone +32 (0)2 466 55 66
E-Mail info@sick.be

Brasil
Phone +55 11 3215-4900
E-Mail marketing@sick.com.br

Canada
Phone +1 905 771 14 44
E-Mail information@sick.com

Česká republika
Phone +420 2 57 91 18 50
E-Mail sick@sick.cz

China
Phone +86 4000 121 000
E-Mail info.china@sick.net.cn
Phone +852-2153 6300
E-Mail ghk@sick.com.hk

Danmark
Phone +45 45 82 64 00
E-Mail sick@sick.dk

Deutschland
Phone +49 211 5301-301
E-Mail info@sick.de

España
Phone +34 93 480 31 00
E-Mail info@sick.es

France
Phone +33 1 64 62 35 00
E-Mail info@sick.fr

Great Britain
Phone +44 (0)1727 831121
E-Mail info@sick.co.uk

India
Phone +91–22–4033 8333
E-Mail info@sick-india.com

Israel
Phone +972-4-6881000
E-Mail info@sick-sensors.com

Italia
Phone +39 02 27 43 41
E-Mail info@sick.it

Japan
Phone +81 (0)3 5309 2112
E-Mail support@sick.jp

Magyarország
Phone +36 1 371 2680
E-Mail office@sick.hu

Nederland
Phone +31 (0)30 229 25 44
E-Mail info@sick.nl

Norge
Phone +47 67 81 50 00
E-Mail sick@sick.no

Österreich
Phone +43 (0)22 36 62 28 8-0
E-Mail office@sick.at

Polska
Phone +48 22 837 40 50
E-Mail info@sick.pl

România
Phone +40 356 171 120
E-Mail office@sick.ro

Russia
Phone +7-495-775-05-30
E-Mail info@sick.ru

Schweiz
Phone +41 41 619 29 39
E-Mail contact@sick.ch

Singapore
Phone +65 6744 3732
E-Mail sales.gsg@sick.com

Slovenija
Phone +386 (0)1-47 69 990
E-Mail office@sick.si

South Africa
Phone +27 11 472 3733
E-Mail info@sickautomation.co.za

South Korea
Phone +82 2 786 6321/4
E-Mail info@sickkorea.net

Suomi
Phone +358-9-25 15 800
E-Mail sick@sick.fi

Sverige
Phone +46 10 110 10 00
E-Mail info@sick.se

Taiwan
Phone +886 2 2375-6288
E-Mail sales@sick.com.tw

Türkiye
Phone +90 (216) 528 50 00
E-Mail info@sick.com.tr

United Arab Emirates
Phone +971 (0) 4 88 65 878
E-Mail info@sick.ae

USA/México
Phone +1(952) 941-6780
1 (800) 325-7425 – tollfree
E-Mail info@sickusa.com

More representatives and agencies
at **www.sick.com**

SICK
Sensor Intelligence.