

ONLINE DATA SHEET
www.mysick.com

Photoelectric sensors
W18-3, Photoelectric proximity sensor, Background suppression

WT18-3P120



SICK
Sensor Intelligence.

SICK
Sensor Intelligence.

Photoelectric sensors
W18-3, Photoelectric proximity sensor, Background suppression

Type	**> WT18-3P120**
Part No.	**> 1025904**





Illustration may differ

At a glance

- Sender LED with infrared light
- Precise background suppression
- Sensing range setting via potentiometer
- Immune to ambient light
- Rugged plastic housing

Your benefits

- Very long sensing distances due to high-performance infrared light
- Reliable object detection with high-precision background suppression due to second sender LED
- Quick and easy sensing distance adjustment due to 4-turn potentiometer
- Crosstalk and ambient light immunity reduce false readings and downtime
- High availability in the field

Features

Sensor/detection principle:	Photoelectric proximity sensor, Background suppression
Dimensions (W x H x D):	17.6 mm x 75.5 mm x 33.5 mm
Housing design (light emission):	Rectangular
Sensing range max.:	10 mm ... 1,000 mm [1]
Sensing range:	50 mm ... 1,000 mm [2]
Type of light:	Infrared light
Light source:	LED [3]
Adjustment:	Potentiometer, 4 turns
Light spot size (distance):	Ø 30 mm (600 mm)
Continuous threshold adaption:	-

[1] [2] Object with 90 % reflectance (referred to standard white, DIN 5033) [3] Average service life of 100,000 h at T_A = +25 °C

Mechanics/electronics

Supply voltage:	10 V DC ... 30 V DC [1]
Ripple:	< 5 Vpp [2]
Power consumption:	55 mA [3]
Output type:	PNP
Output function:	Complementary
Switching mode:	Light/dark switching
Output current Imax.:	100 mA

© SICK AG. Subject to change without notice.

Response time:	< 700 µs [4]
Switching frequency:	700 Hz [5]
Connection type:	Cable, 4-wire, 2 m [6]
Cable material:	PVC
Circuit protection:::	A, C, D [7] [8] [9]
Weight:	120 g
Housing material:	ABS, Plastic
Optics material:	PMMA
Enclosure rating:	IP 67
Ambient operating temperature:	-40 °C ... +60 °C
Ambient storage temperature:	-40 °C ... +75 °C
UL File No.:	NRKH.E181493 & NRKH7.E181493

[1] Limit values, operation in short-circuit protected network max. 8 A [2] May not exceed or fall short of V_S tolerances [3] Without load [4] Signal transit time with resistive load [5] With light/dark ratio 1:1 [6] Do not bend below 0 °C [7] A = V_S connections reverse-polarity protected [8] C = interference suppression [9] D = outputs overcurrent and short-circuit protected

Dimensional drawing

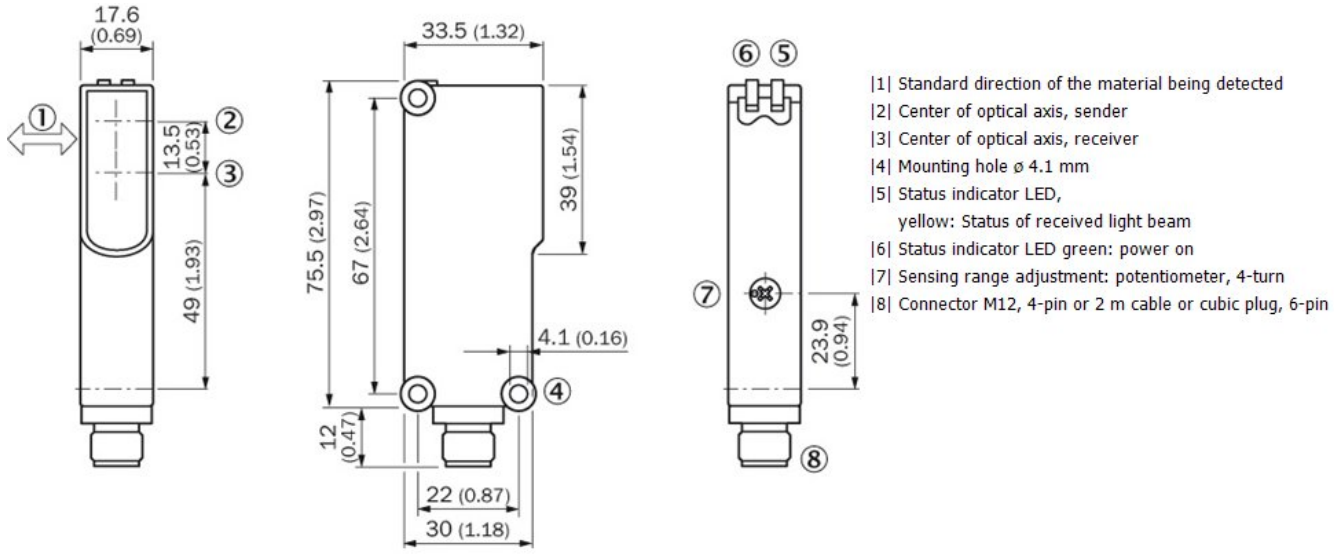

© SICK AG. Subject to change without notice.

Adjustments possible

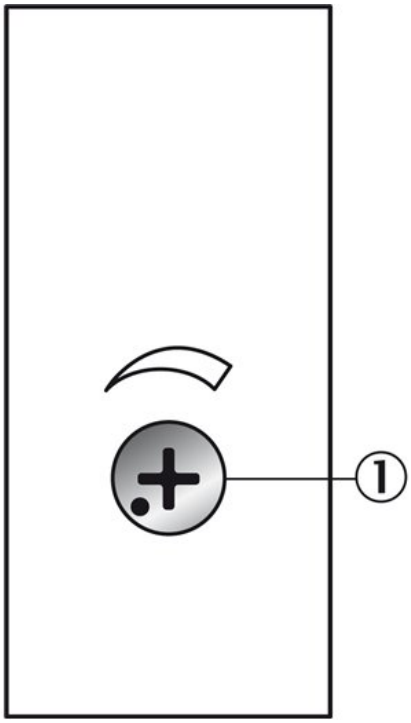

|1| Sensing range adjustment: potentiometer, 4-turn

Connection diagram

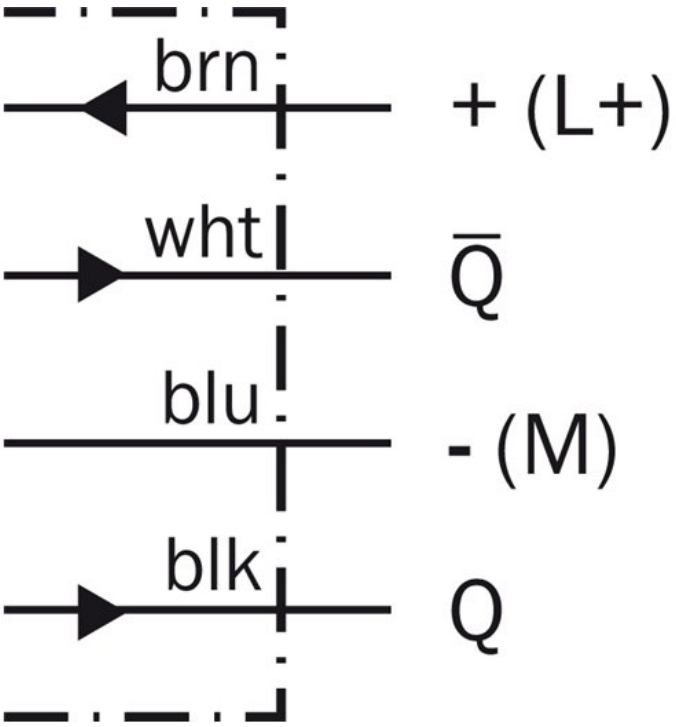

© SICK AG. Subject to change without notice.

Characteristic curve

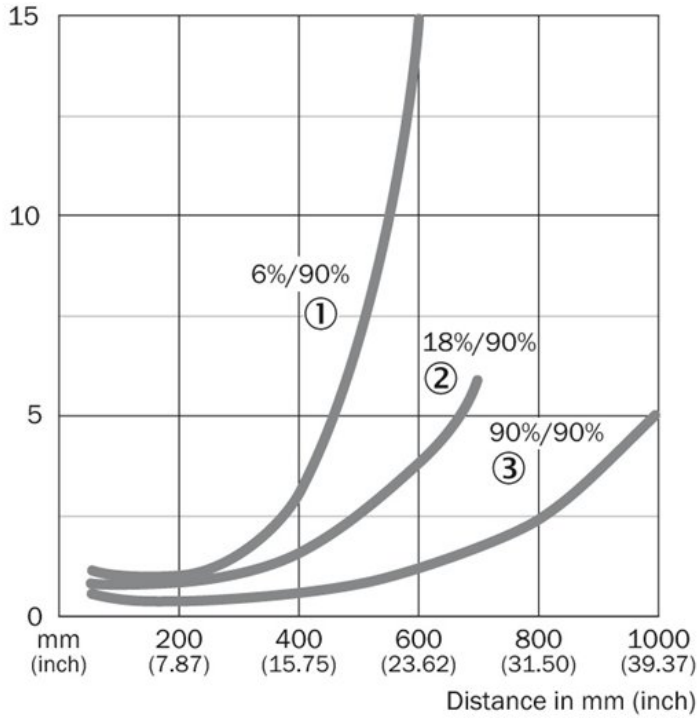

|1| Sensing range on black, 6 % remission
|2| Sensing range on gray, 18 % remission
|3| Sensing range on white, 90 % remission

Connection type

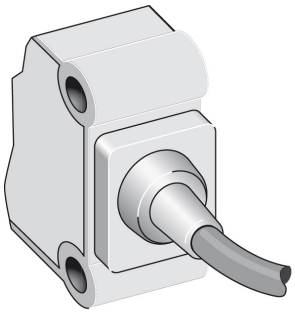

Sensing range diagram

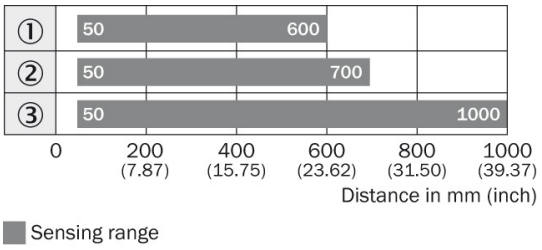

© SICK AG. Subject to change without notice.

A4 4c int43

Australia
Phone +61 3 9457 0600
1800 33 48 02 – tollfree
E-Mail sales@sick.com.au

Belgium/Luxembourg
Phone +32 (0)2 466 55 66
E-Mail info@sick.be

Brasil
Phone +55 11 3215-4900
E-Mail marketing@sick.com.br

Canada
Phone +1 905 771 14 44
E-Mail information@sick.com

Česká republika
Phone +420 2 57 91 18 50
E-Mail sick@sick.cz

China
Phone +86 4000 121 000
E-Mail info.china@sick.net.cn
Phone +852-2153 6300
E-Mail ghk@sick.com.hk

Danmark
Phone +45 45 82 64 00
E-Mail sick@sick.dk

Deutschland
Phone +49 211 5301-301
E-Mail info@sick.de

España
Phone +34 93 480 31 00
E-Mail info@sick.es

France
Phone +33 1 64 62 35 00
E-Mail info@sick.fr

Great Britain
Phone +44 (0)1727 831121
E-Mail info@sick.co.uk

India
Phone +91–22–4033 8333
E-Mail info@sick-india.com

Israel
Phone +972-4-6881000
E-Mail info@sick-sensors.com

Italia
Phone +39 02 27 43 41
E-Mail info@sick.it

Japan
Phone +81 (0)3 5309 2112
E-Mail support@sick.jp

Magyarország
Phone +36 1 371 2680
E-Mail office@sick.hu

Nederland
Phone +31 (0)30 229 25 44
E-Mail info@sick.nl

Norge
Phone +47 67 81 50 00
E-Mail sick@sick.no

Österreich
Phone +43 (0)22 36 62 28 8-0
E-Mail office@sick.at

Polska
Phone +48 22 837 40 50
E-Mail info@sick.pl

România
Phone +40 356 171 120
E-Mail office@sick.ro

Russia
Phone +7-495-775-05-30
E-Mail info@sick.ru

Schweiz
Phone +41 41 619 29 39
E-Mail contact@sick.ch

Singapore
Phone +65 6744 3732
E-Mail sales.gsg@sick.com

Slovenija
Phone +386 (0)1-47 69 990
E-Mail office@sick.si

South Africa
Phone +27 11 472 3733
E-Mail info@sickautomation.co.za

South Korea
Phone +82 2 786 6321/4
E-Mail info@sickkorea.net

Suomi
Phone +358-9-25 15 800
E-Mail sick@sick.fi

Sverige
Phone +46 10 110 10 00
E-Mail info@sick.se

Taiwan
Phone +886 2 2375-6288
E-Mail sales@sick.com.tw

Türkiye
Phone +90 (216) 528 50 00
E-Mail info@sick.com.tr

United Arab Emirates
Phone +971 (0) 4 88 65 878
E-Mail info@sick.ae

USA/México
Phone +1(952) 941-6780
1 (800) 325-7425 – tollfree
E-Mail info@sickusa.com

More representatives and agencies
at **www.sick.com**

SICK
Sensor Intelligence.