Product Data Sheet
Part No. WST-1203 UX/BX Washable Type

(self drive circuit)

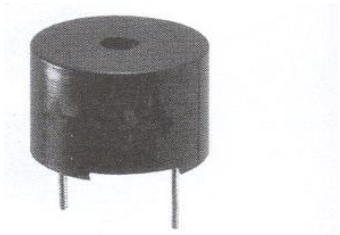

ϕ 12.0 × H7.5

DIMENSIONS

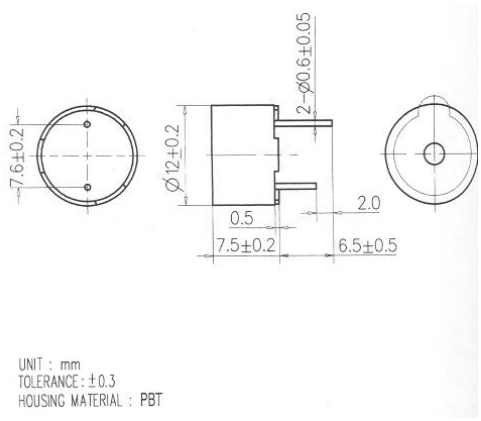

Type	Unit	
Rated Voltage	(Vdc)	3
Operating Voltage	(Vdc)	2~5
Rated Current	(mA)	< 30
Sound Output at 10cm	(dB)	> 82
Resonance Frequency	(Hz)	2300±500
Response Time	(Ms)	< 25
Operating Temp	(C)	-20+70
Storage Temp	(C)	-25+80
Weight	(g)	2
Dimension	mm	12 x H7.5
*Value applying rated voltage (DC) *distance for measurement 10cm *WST-12XXBX: 3100 Hz		

CHARACTERISTICS

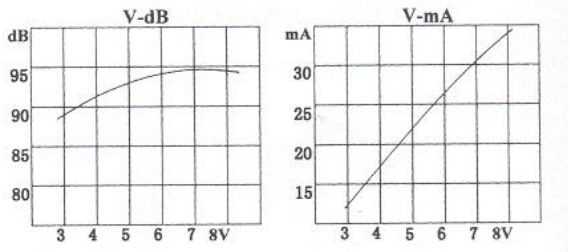

11547 K-Tel Drive Minnetonka, MN 55343 Ph: 952.933.3120 Fax: 952.929.2765
www.soberton.com