Hall Effect Switch IC

Features:

- Operates from 2.4V to 26V supply voltage with reverse voltage protection
- Operates with magnetic fields from DC to 15kHz
- On-chip Hall Sensor
- On-chip temperature compensation circuitry minimizes shifts in on and off points and hysteresis over temperature and supply voltage
- Ideal sensor for speed measurement, revolution counting, positioning, and DC brushless motors
- On(L) with magnetic South pole and Off (H) with North pole

Functional Description :

WSH130 is designed to integrate Hall sensor with output driver together on the same chip, it is suitable for speed measurement, revolution counting, positioning, and DC brushless motors. It includes a temperature compensated voltage regulator, a differential amplifier, a Hysteresis controller and a open-collector output driver capable of sinking up to 20mA current load. An on-chip protection resistor is implemented to prevent reverse power fault.

The temperature-dependent bias increases the supply voltage of the hall plates and adjusts the switching points to the decreasing induction of magnets at higher temperatures. Subsequently, the output can keep switching on/off on more precise switch point regardless to the ambient temperature. WSH130 are rated for operation over temperature range from –40˚ C to 125 ˚C and voltage ranges from 2.4V to 26V.

Pin Descriptions:

Name	P/I/O	Pin#	Description
Vdd	P	1	Positive Power Supply
Gnd	O	2	Ground
Vout	O	3	Output Pin

Absolute Maximum Rating (at Ta=25˚ C)

Supply Voltage Vcc ---------- 26V

Output breakdown Voltage $Vout_{(breakdown)}$ ---------- 30V

Winson reserves the right to make changes to improve reliability or manufacturability.

©Winson, 2013/5/23

Magnetic flux density	B	----------	Unlimited
Reverse Protection Voltage	Vr	----------	26V
Output ON Current (continuous)	Ic	----------	25mA
Operating Temperature Range	Ta	----------	(-40˚C to +125˚C)
Storage Temperature Range	Ts	----------	(-65˚C to +150˚C)
Package Power Dissipation	Pd	----------	500mw

Electrical Characteristics: **(T=+25˚C, Vcc=2.4V to 26V)**

Characteristic	Symbol	Test Conditions	Min	Typ	Max	Units
Supply Voltage	Vcc	—	2.4	—	26	V
Output Saturation Voltage	Vout (sat)	Vcc=12V,Ic=10mA B > Bop	—	0.2	0.6	V
Output Leakage Current	Ileakage	Vcc=12V, B<Brp	—	<0.1	10	uA
Supply Current	Isupply	Vcc=12V,Output Open	—	2.0	5	mA
Output Rise Time	Tr	Vcc=12V,RL=2K Ω CL=20Pf	—	1.0	10	μs
Output Falling Time	Tf	Vcc=12V,RL=2K Ω CL=20Pf	—	0.3	1.5	μs

Function Block:

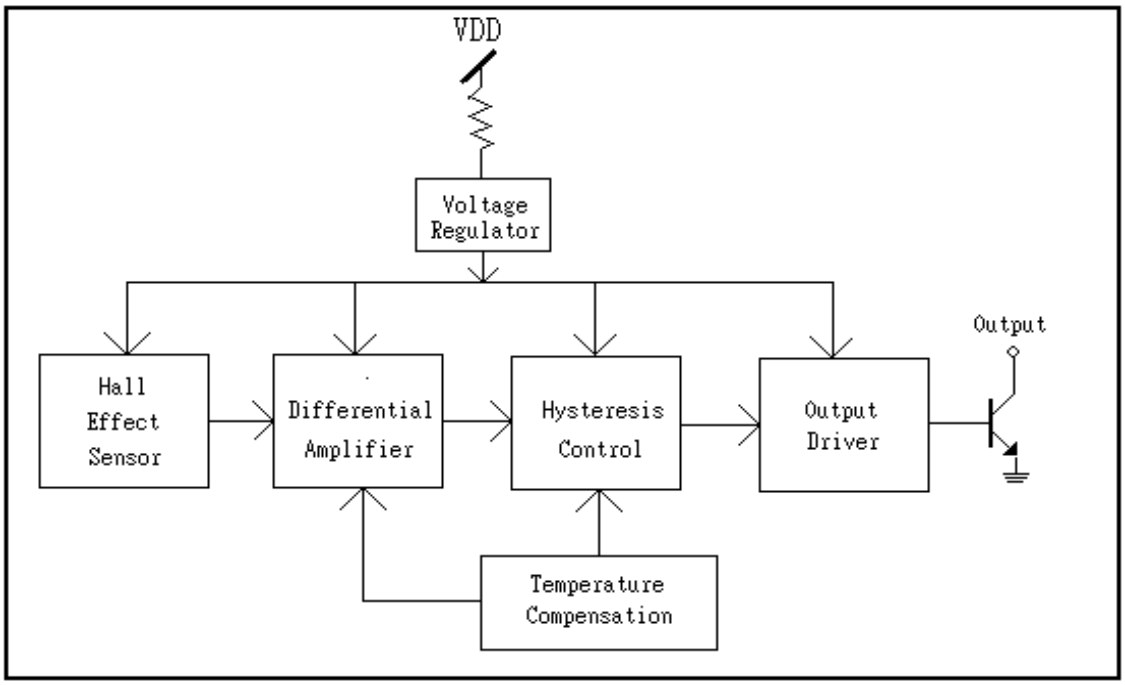

Winson reserves the right to make changes to improve reliability or manufacturability.

©Winson, 2013/5/23

Magnetic Characteristics:

Characteristic	Symbol	Grade	Min.	Typ.	Max.	Unit
Operating Point	Bop	A	+5	+ 30	+ 50	Gauss
		B		+ 50	+ 70	Gauss
		C			+120	Gauss
Release Point	Brp	A	-50	- 30	-5	Gauss
		B	-70	-50		Gauss
		C	-120			Gauss
Hysteresis Window	Bhys			60	100	Gauss

* + **mean South magnetic field, 1mT=10 Gauss**

Ordering Information:

WSH130-XPAN □ (TO-92)
WSH130-XPCN □ (SOT23)
Grade
Halogen Free

Grade:
1: 50 Gauss
2: 70 Gauss
3: 120 Gauss

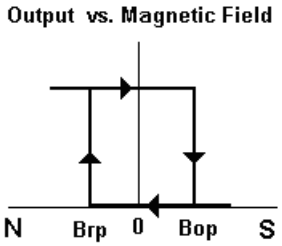

Winson reserves the right to make changes to improve reliability or manufacturability.

©Winson, 2013/5/23

Package Information:

TO-92S:

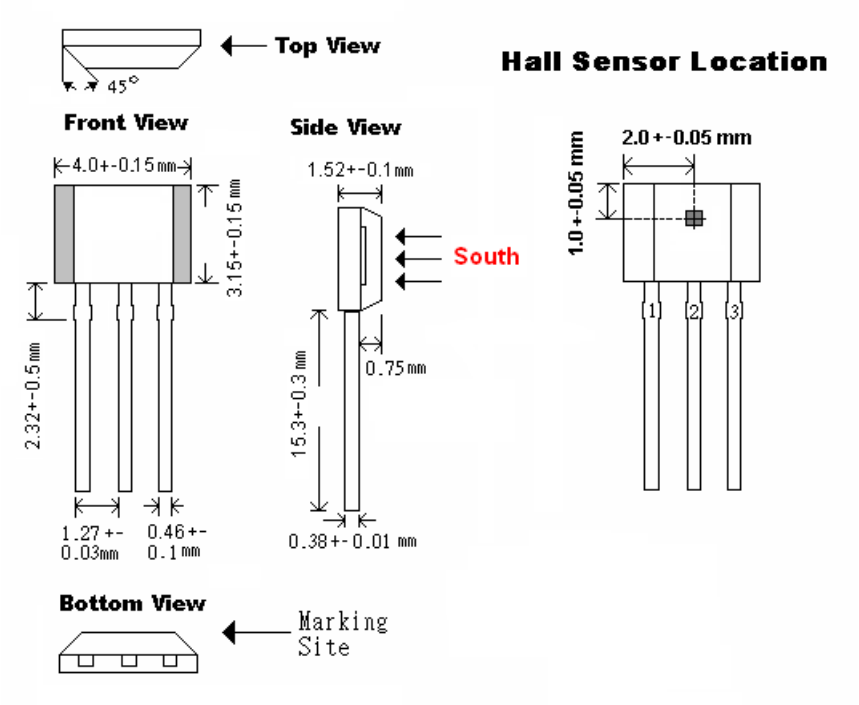

SOT23:

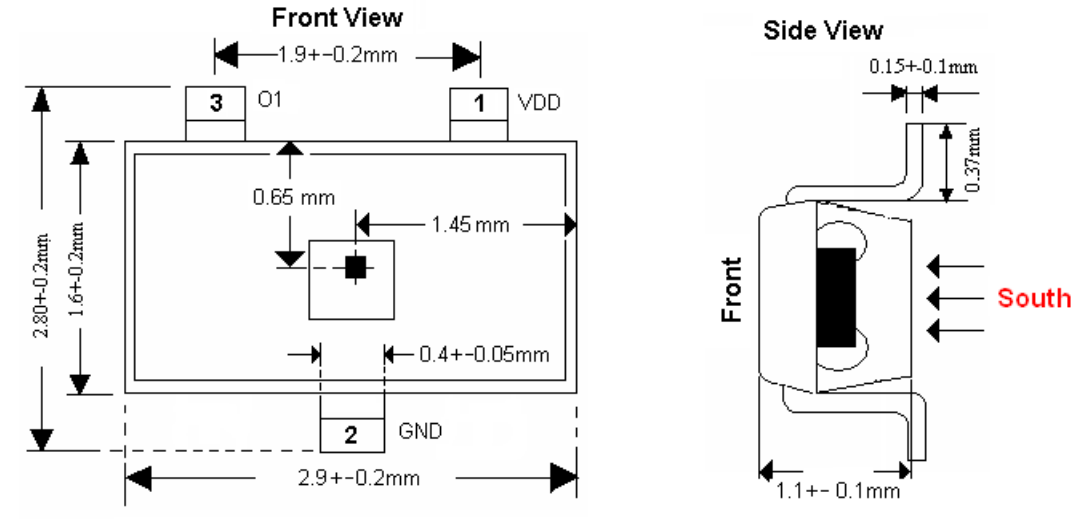

Winson reserves the right to make changes to improve reliability or manufacturability.

©Winson, 2013/5/23

Application Circuit:

Fan Application:

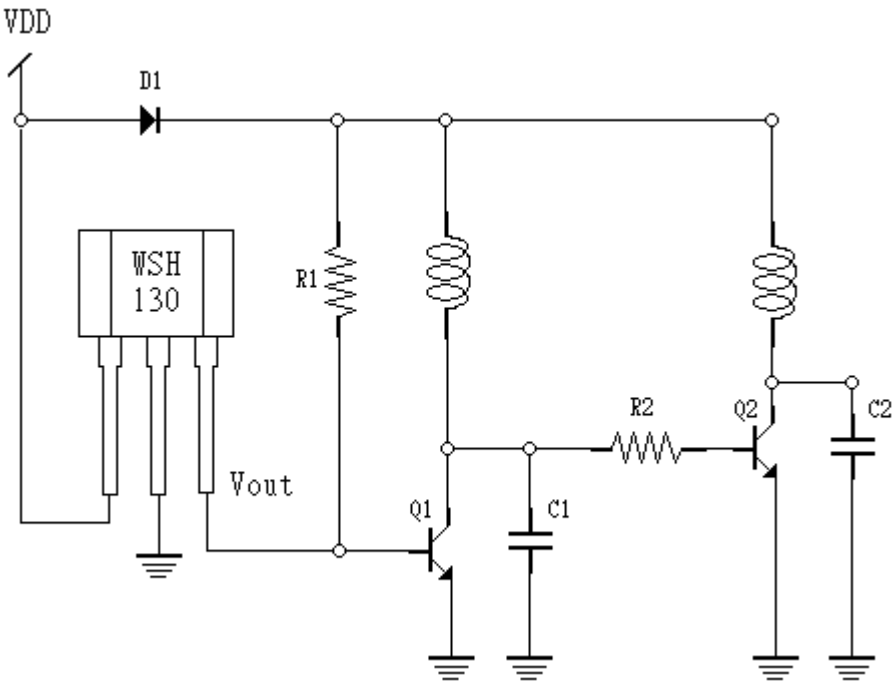

Magnetic detector:

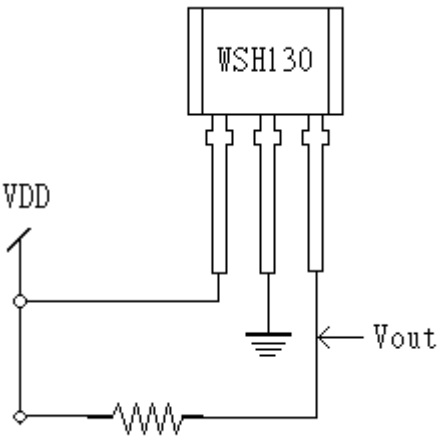

Winson reserves the right to make changes to improve reliability or manufacturability.

©Winson, 2013/5/23