Power Metal Strip® Battery Shunt Resistor, Sn Plated, Very Low Value (50 µΩ, 100 µΩ, 125 µΩ, and 250 µΩ)



FEATURES

- High power to resistor size ratio
- Sn plating assists with PCB mounting and corrosion protection
- Proprietary processing technique produces extremely low resistance values
- All welded construction
- Very low inductance (< 5 nH)
- Low thermal EMF (as low as < 1 µV/°C)
- AEC-Q200 qualified
- Material categorization: for definitions of compliance please see www.vishay.com/doc?99912

AUTOMOTIVE GRADE
Pb-free
e3
RoHS COMPLIANT
HALOGEN FREE
GREEN (5-2008)

DESIGN TOOLS (click logo to get started)

3D Models Available

STANDARD ELECTRICAL SPECIFICATIONS

GLOBAL MODEL	SIZE	POWER RATING $P_{70\,°C}$ W	TOLERANCE ± %	RESISTANCE VALUE RANGE Ω	RESISTANCE VALUES CURRENTLY AVAILABLE (1) Ω	WEIGHT (typical) g
WSBS8518...14	8518	36	5, 10	50µ to 1000µ	50µ, 100µ, 125µ, 250µ	50µ = 37.9, 100µ / 125µ = 36.5, 250µ = 33.7

Note

(1) Other values may be available, contact factory

TECHNICAL SPECIFICATIONS

PARAMETER	UNIT	RESISTOR CHARACTERISTICS
Temperature coefficient	ppm/°C	± 200 for 50 µΩ
		± 175 for 100 µΩ / 125 µΩ
		± 110 for 250 µΩ
Temperature coefficient (element material)	ppm/°C	± 20
Operating temperature range	°C	-65 to +170
Thermal EMF	µV/°C	< 1 for 50 µΩ and < 3 for 100 µΩ, 125 µΩ, 250 µΩ
Maximum current rating	A	$(P/R)^{1/2}$

GLOBAL PART NUMBER INFORMATION

GLOBAL PART NUMBERING: WSBS8518L1250JK14 (WSBS8518...14, 0.000125 Ω, ± 5 %, bulk pack)

W	S	B	S	8	5	1	8	L	1	2	5	0	J	K	1	4

GLOBAL MODEL	RESISTANCE VALUE	TOLERANCE CODE	PACKAGING CODE	SPECIAL
WSBS8518	**L** = mΩ **L0500** = 0.000050 Ω **L1000** = 0.000100 Ω **L1250** = 0.000125 Ω **L2500** = 0.000250 Ω	**J** = ± 5 % **K** = ± 10 %	**K** = bulk pack **T** = tray pack	**14** = Sn plated

For technical questions, contact: ww2cresistors@vishay.com
THIS DOCUMENT IS SUBJECT TO CHANGE WITHOUT NOTICE. THE PRODUCTS DESCRIBED HEREIN AND THIS DOCUMENT ARE SUBJECT TO SPECIFIC DISCLAIMERS, SET FORTH AT www.vishay.com/doc?91000

DIMENSIONS in inches (millimeters)

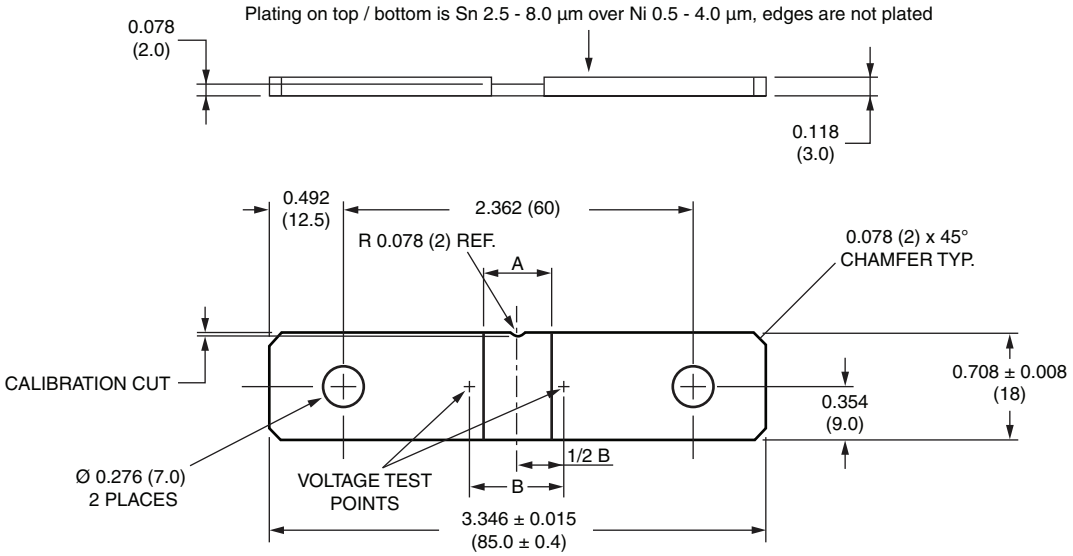

DERATING

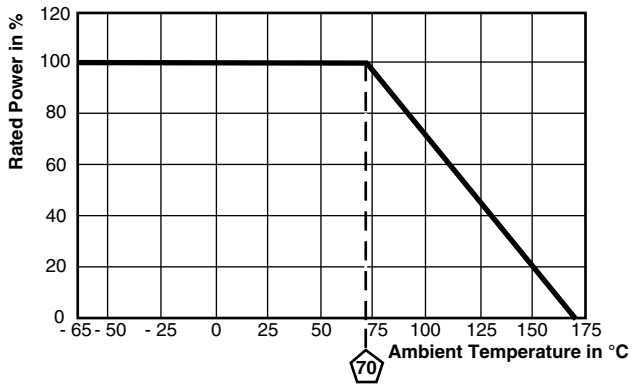

TOLERANCES ON DECIMALS
.xxx ± 0.005 [.x ± 0.1]

UNLESS OTHERWISE LISTED

RESISTANCE VALUE (µΩ)	ELEMENT MATERIAL	A REFERENCE	B ± 0.005 [± 0.13]
50	Mn-Cu	0.145 [3.68]	0.270 [8.71]
100	Mn-Cu	0.370 [9.40]	0.495 [12.57]
125	Mn-Cu	0.480 [12.19]	0.605 [15.37]
250	Mn-Cu	0.900 [22.86]	1.025 [26.04]

PERFORMANCE		
TEST	**CONDITIONS OF TEST**	**TEST LIMITS**
Thermal shock	-55 °C to +150 °C, 1000 cycles, 15 min at each extreme	± 0.5 % Δ*R*
Short time overload	5x rated power for 5 s	± 0.5 % Δ*R*
Low temperature storage	-65 °C for 24 h	± 0.5 % Δ*R*
High temperature exposure	1000 h at +170 °C	± 1.0 % Δ*R*
Bias humidity	+85 °C, 85 % RH, 10 % bias, 1000 h	± 0.5 % Δ*R*
Mechanical shock	100 *g*'s for 6 ms, 5 pulses	± 0.5 % Δ*R*
Vibration	Frequency varied 10 Hz to 2000 Hz in 1 min, 3 directions, 12 h	± 0.5 % Δ*R*
Load life	1000 h at +70 °C, 1.5 h "ON", 0.5 h "OFF"	± 1.0 % Δ*R*
Moisture resistance	MIL-STD-202, method 106, 0 % power, 7b not required	± 0.5 % Δ*R*

For technical questions, contact: ww2cresistors@vishay.com

THIS DOCUMENT IS SUBJECT TO CHANGE WITHOUT NOTICE. THE PRODUCTS DESCRIBED HEREIN AND THIS DOCUMENT ARE SUBJECT TO SPECIFIC DISCLAIMERS, SET FORTH AT www.vishay.com/doc?91000

Disclaimer

ALL PRODUCT, PRODUCT SPECIFICATIONS AND DATA ARE SUBJECT TO CHANGE WITHOUT NOTICE TO IMPROVE RELIABILITY, FUNCTION OR DESIGN OR OTHERWISE.

Vishay Intertechnology, Inc., its affiliates, agents, and employees, and all persons acting on its or their behalf (collectively, “Vishay”), disclaim any and all liability for any errors, inaccuracies or incompleteness contained in any datasheet or in any other disclosure relating to any product.

Vishay makes no warranty, representation or guarantee regarding the suitability of the products for any particular purpose or the continuing production of any product. To the maximum extent permitted by applicable law, Vishay disclaims (i) any and all liability arising out of the application or use of any product, (ii) any and all liability, including without limitation special, consequential or incidental damages, and (iii) any and all implied warranties, including warranties of fitness for particular purpose, non-infringement and merchantability.

Statements regarding the suitability of products for certain types of applications are based on Vishay's knowledge of typical requirements that are often placed on Vishay products in generic applications. Such statements are not binding statements about the suitability of products for a particular application. It is the customer's responsibility to validate that a particular product with the properties described in the product specification is suitable for use in a particular application. Parameters provided in datasheets and / or specifications may vary in different applications and performance may vary over time. All operating parameters, including typical parameters, must be validated for each customer application by the customer's technical experts. Product specifications do not expand or otherwise modify Vishay's terms and conditions of purchase, including but not limited to the warranty expressed therein.

Hyperlinks included in this datasheet may direct users to third-party websites. These links are provided as a convenience and for informational purposes only. Inclusion of these hyperlinks does not constitute an endorsement or an approval by Vishay of any of the products, services or opinions of the corporation, organization or individual associated with the third-party website. Vishay disclaims any and all liability and bears no responsibility for the accuracy, legality or content of the third-party website or for that of subsequent links.

Except as expressly indicated in writing, Vishay products are not designed for use in medical, life-saving, or life-sustaining applications or for any other application in which the failure of the Vishay product could result in personal injury or death. Customers using or selling Vishay products not expressly indicated for use in such applications do so at their own risk. Please contact authorized Vishay personnel to obtain written terms and conditions regarding products designed for such applications.

No license, express or implied, by estoppel or otherwise, to any intellectual property rights is granted by this document or by any conduct of Vishay. Product names and markings noted herein may be trademarks of their respective owners.

© 2022 VISHAY INTERTECHNOLOGY, INC. ALL RIGHTS RESERVED