Non-isolated BuckOffline LED Driver

Features

- Critical Conduction Mode Operation
- Internal 600V Power MOSFET
- Gate Drive and No Auxiliary Winding
- ±3% LED Current Accuracy
- Efficiency up to 93%
- LED Short Circuit Protection
- LED Open Circuit Protection
- Current Sense Resistor Short Protection
- Thermal Regulation Function
- External PWM Dimming

Applications

- LED Bulb Lights
- LED Panel Lights
- LED Strings

Description

The WS9445P is a high precision buck constant current LED driver and is applied to non-isolated buck LED power system with AC input voltage of 85VAC-265VAC. The WS9445P integrates a 600V power MOSFET, and can achieve excellent constant current performance with very few external components, so the system cost and size are minimized. The driver operates in critical conduction mode, and the output current does not change with the inductance and LED output voltage. The operating current of the IC is 200uA, so it doesn't need the auxiliary winding for supplying the chip, thus simplifying design and reducing cost.

The WS9445P adopts intelligent temperature control and thoroughly solves the problem of light flashing at high temperatures. It integrates an external dimming pin which inputs PWM signal and can dim by changing the duty cycle of the PWM signal. The WS9445P offers full protection functions to improve the system reliability, including LED open circuit protection, LED short circuit protection, CS resistor short circuit protection and thermal regulation function.

The WS9445P is available in DIP-7 Package.

Typical Application Circuit

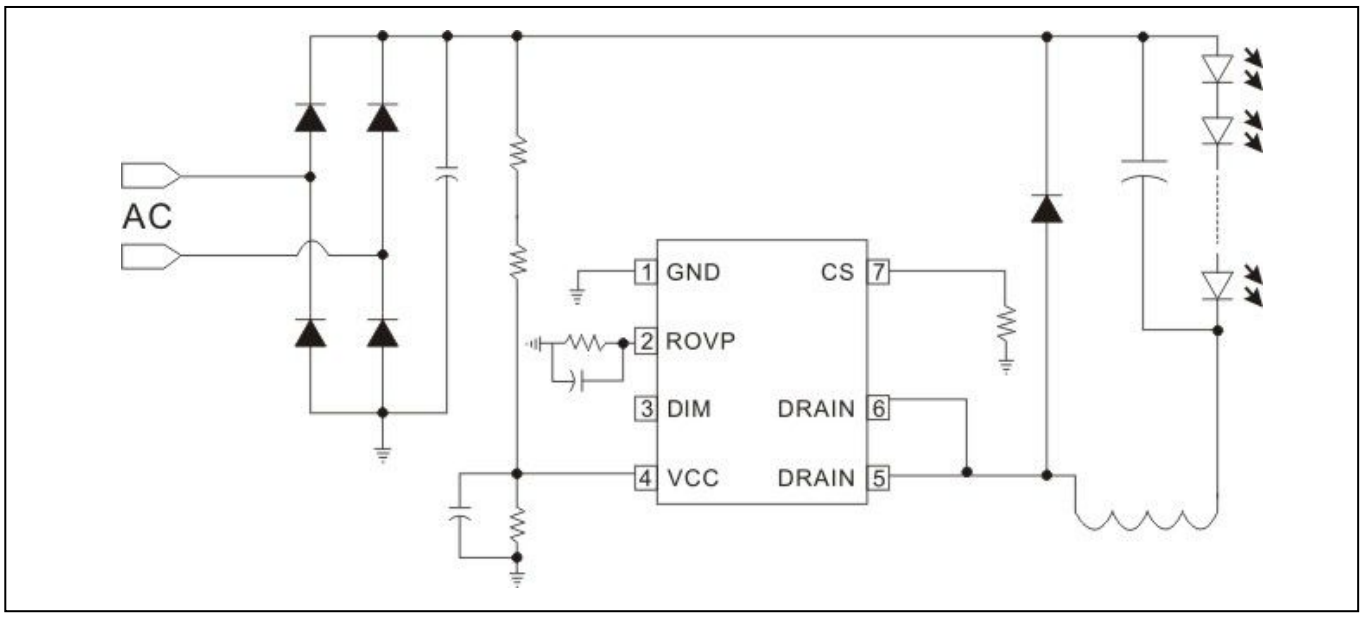

Copyright@Winsemi Microelectronics Co., Ltd., All right reserved.

Pin Configuration and Marking Information

The WS9445P is available in DIP-7 Package. The top marking is shown as below:

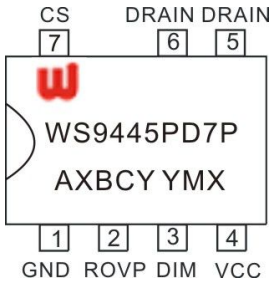

WS9445PD7P：Product Code
A：Product Code
X：Internal Code
BCY：Internal Code For QC
YMX：D/C

Pin Definition

Pin No.	Name	Description
1	GND	Ground
2	ROVP	Over Voltage Protection Setting Pin. Connect a resistor to GND
3	DIM	Dinmming Pin.Must be floated when not in use.
4	VCC	Power Supply Pin
5,6	DRAIN	Internal HV Power MOSFET Drain
7	CS	Current Sense Pin. Connect a sense resistor between this pin and the GND pin.

Block Diagram

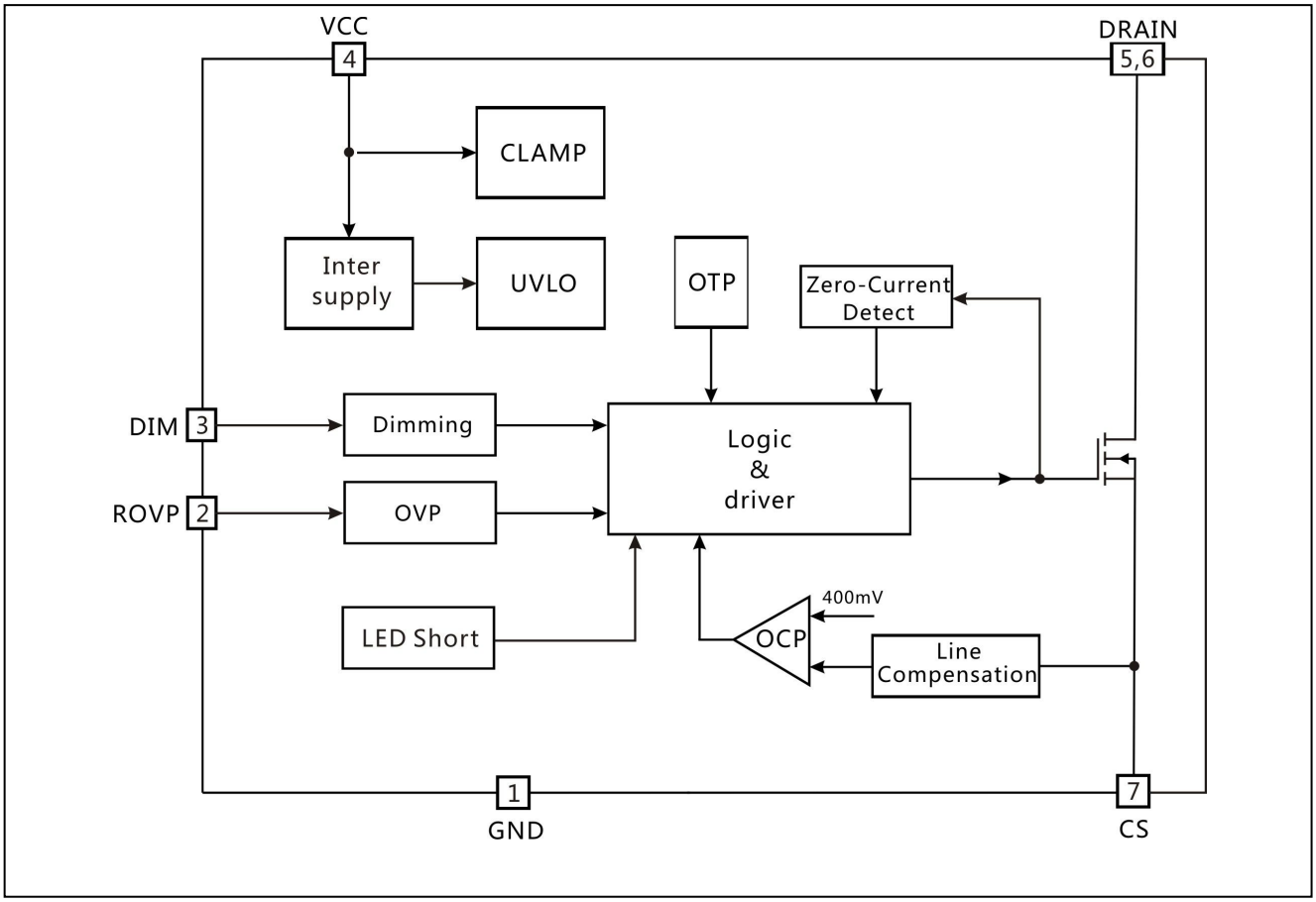

Ordering Information

Package	Marking	Part Number
7-Pin DIP-7, Pb-free	WS9445PD7P	WS9445PD7P

Recommended Operation Conditions

Part Number	Package	Input voltage	Maximum output power
WS9445PD7P	DIP7	175VAC-264VAC	120V/560mA

Absolute Maximum Ratings

Symbol	Parameter	Range	Unit
V_{DS}	Internal HV MOSFET drain voltage	-0.3~600	V
I_{CC_MAX}	VCC pin maximum sink current	2.5	mA
V_{ROVP}	LED open circuit protection voltage regulation	-0.3~7	V
V_{CS}	Current sense pin input voltage	-0.3~8	V
P_{DMAX}	Power dissipation DIP7	-0.3~7	V
T_J	Maximum operating junction temperature	0.9	W
T_{STG}	Minimum/Maximum Storage temperature	150	℃

Note： Stresses beyond those listed under "absolute maximum ratings" may cause permanent damage to the device

Electrical Characteristics (Unless otherwise specified, VCC=15V and TA =25 ℃)

Symbol	Parameter	Conditions	Min	Typ	Max	Units
Supply Voltage Section						
VCC_CLAMP	VCC Clamp Voltage	10mA	17.8	18.8	19.8	V
UVLO_on	Chip Startup Voltage		14	15	16.2	V
UVLO_off	VDD Under voltage protection		9	9.5	10	V
Ist	Startup Current	VCC= 13V	150	220	300	uA
Iop	Operating Current	Fop=70KHz	100	170	250	uA
Current Sense Section						
Vcs_th	Threshold Voltage for Peak Current Limit		390	400	410	mV
TLEB	Leading Edge Blanking Time for Current Sense			350		ns
TDELAY	Switch Off Delay Time			200		ns
Internal Time Control Section						
Toff_max	Minimum OFF Time			310		us
Toff_min	Maximum OFF Time	Rovp=70k		4.5		us
Ton_max	Maximum On Time			100		us
DIM Dimming Section						
V_{H_DIM}	DIM Square Wave High Level		1	3	5	V
V_{L_DIM}	DIM Square Wave Low Level		-300	0	400	mV
$f_{_DIM}$	DIM Square Signal Frequency		0.1	0.5	5	KHZ
MOSFET Section						
Rds_on	Static Drain-source On-State Resistance	Vgs=15V,Ids=0.5A			2	Ω
BVdss	Drain-Source Breakdown Voltage	Vgs=0V,Ids=250uA	600			V
Idss	Drain-Source Leakage Current	Vgs=0V,Vds=500V			10	uA
Thermal Regulation Section						
T_{REG}	Thermal Regulation Temperature			150		℃

Function Description

The WS9445P is a high performance non-isolated buck converter specially designed for LED lighting. The device integrates a 600V power MOSFET. With the help of advanced constant current control and gate drive technology, the converter achieves excellent constant current performance with very few external components. It does not need auxiliary winding for powering the IC or voltage sensing, hence the system size and cost is greatly reduced.

Start Up

After system powered on, the VCC pin capacitor is charged up by the start up resistor. When the VCC pin voltage reaches the turn on threshold, the internal circuits start operating. The WS9445P integrates a 17V ZENER diode to clamp the VCC voltage. Due to the ultra-low operating current, the auxiliary winding is not needed to supply the IC.

The typical value of the start-up current is 200uA (the maximum value is 300uA). For the application of 176VAC—264VAC, the start-up resistor can be calculated by the equation:

$$R_{ST} < \frac{V_{IN_MIN} \times 1.414}{I_{ST_MAX}} \approx \frac{176 \times 1.414}{270} = 910K\Omega$$

Two resistors in 1206 size SMD can be used in series.

VCC Capacitor Selection

The Vcc capacitor is used to bypass noise to IC, so that to assure its stable operation, and should be as close as possible to the chip.

A 4.7uF capacitor can be used in Vcc. If selecting MLCC, the material of X7R will be used to satisfy the stability of the capacity under high temperatures. Due to external damage resulted from small volume and brittle texture of MLCC, the Vcc is easy to leakage currents, which will make the WS9445P unable to start. Strict control measures are taken in its layout and productive process.

Constant Current Control

The WS9445P utilizes proprietary current control method. It can achieve precise LED output current with a few external components. Cycle by Cycle current sense is adopted in WS9445P, the CS pin is connected to the current sense comparator, and the voltage on CS pin is compared with the internal 400mV reference voltage. The MOSFET will be switched off when the voltage on CS pin reaches the threshold. The CS comparator includes a 350ns leading edge blanking time.

The peak inductor current is calculated by the equation:

$$I_{PK} = \frac{400}{R_{CS}}(mA)$$

Where, RCS is the current sense resistor value.

The current in LED can be calculated by the equation:

$$I_{LED} = \frac{I_{PK}}{2}(mA)$$

Where, IPK is the peak current of the inductor.

Freewheeling Diode

The diode will bear the reverse voltage equal to the input voltage when the MOSFET is on.A 600V diode was suggested to use. Besides, the operating frequency of freewheeling diode is from 20K to 120 KHz, such ultra fast recovery diodes as ES and ER whose Trr is less than 50ns are good choice.

Input Electrolytic Capacitor

Input voltage should be considered in to the capacitor pressure, and the common value is 400V.

In general, the capacity design can be calculated by the following empirical equations:

90Vac~264Vac: 1W output uses1uF buck electrolytic capacitor;

176Vac~264Vac: 1W output uses 0.5uF buck electrolytic capacitor.

Output Capacitor

Electrolytic capacitor is recommended to be used. Its stable capacitance can improve the efficiency of power supply, the LED ripple current and luminous efficiency.

Vovp voltage should be considered in output capacitor pressure.

External PWM Dimming

The WS9445P integrates an external dimming pin which inputs PWM signal and can dim by changing the duty cycle of the PWM signal. The testing dimmable curve of a 120V/260mA driver under 175~264Vac application is shown as below:

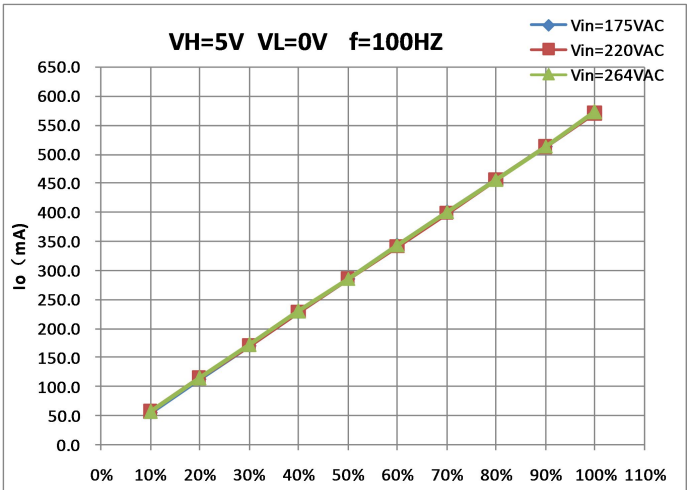

The duty cycle of the PWM signal

Inductor Selection

The WS9445P works in a inductor critical current conduction mode. When the power MOFET is switched on, the current in the inductor rises up from zero. The on time of the MOSFET can be calculated by the equation:

$$t_{on} = \frac{L \times I_{PK}}{V_{IN} - V_{LED}}$$

Where,

L is the inductance value,

IPK is the peak current of the inductor,

VIN is the DC bus voltage after the rectifier bridge,

VLED is the voltage on the LED.

After the power MOSFET is also switched off and the current in the inductor decreases. When the inductor current reaches zero, the power MOSFET is turned on again by IC internal logic. The off time of the MOSFET is given by the equation:

$$t_{off} = \frac{L \times I_{PK}}{V_{LED}}$$

The inductance can be calculated by the equation:

$$L = \frac{V_{LED} \times (V_{IN} - V_{LED})}{f \times I_{PK} \times V_{IN}}$$

Where, f is the maximum system switching frequency, which is proportional to the input voltage. So the minimum switching frequency is set at lowest input voltage, and the maximum switching frequency is set at highest input voltage.

The minimum and maximum off time of WS9445P is set at 4.5us and 310us, respectively. Referring to the equation of Toff calculation, if the inductance is too small, the Toff may be smaller than the minimum off time, the system will operate in discontinuous conduction mode and the output current will be smaller than the designed value. If the inductance is too large, the Toff may be larger than the maximum off time, the system will operate in continuous conduction mode and the output current will be higher than the designed value. So it is important to choose a proper inductance.

Thermal Regulation

The WS9445P integrates thermal regulation function. When the system is under higher temperature, the output current is gradually reduced; the output power and thermal dissipation are also reduced. The system temperature is regulated and the system reliability is improved. The thermal regulation temperature is set to 150℃ internally.

Over Voltage Protection

The over voltage protection of the WS9445P can be programmed by the ROVP pin resistor. The ROVP pin voltage is 0.5V.

When the LED is open circuit, the period of the output voltage increases gradually, the demagnetization time gets shorter. The demagnetization time at OVP---- Tovp can be calculated by the open circuit protection voltage by the equation:

$$Tovp = \frac{L \times V_{CS}}{R_{CS} \times V_{OVP}}$$

Where，

Vcs is the CS pin turn off threshold (0.4V);

Vovp is the open circuit protection voltage.

And then the Rovp resistor value can be calculated by the equation:

$$Rovp = 120 - 7.67 * Tovp * 10^{6} \text{ (K}\Omega\text{)}$$

It is suggested that the open circuit protection voltage is set at or above 1.5 times maximum load voltage.

Protection Function

The WS9445P offers rich protection functions to improve the system reliability, including LED open/short protection, CS resistor short protection, VCC under voltage protection, thermal regulation. When the LED is open circuit, the system will trigger the over voltage protection and stop switching. When the LED short circuit is detected, the system works at low frequency and the CS pin turnoff threshold is reduced. So the system power consumption is very low. At some abnormal fault condition, such as CS resistor shorted or inductor saturation, the internal fast fault detection circuit will be triggered, the system stops switching immediately.

After the system enters into faulty condition, the VCC voltage will decrease until it reaches the UVLO threshold, then the system will restart again. If the fault condition is removed, the system will recover to normal operation.

Line Voltage Compensation

The WS9445P integrates line voltage compensation function, which makes LED current remain unchanged in the range of full voltage with good line regulation and current accuracy.

PCB Layout

The following rules should be followed in WS9445P PCB layout:

VCC Capacitor: The VCC capacitor should be as close as possible to the VCC Pin and GND pin.

Ground Path: The power ground path for current sense resistor should be short, and the power ground path should be separated from small signal ground path before connecting to the negative node of the bulk capacitor.

The Area of Power Loop: The area of main current loop should be as small as possible to reduce EMI radiation. And it should be away from diodes and other heating components.

ROVP PIN: The ROVP resistor should be as close as possible to the ROVP Pin to increase its resistance to prevent from the interference.

DRAIN PIN: The copper area of DRAIN pin can be increased for better thermal dissipation. And it should be away from CS/VCC and ROVP Pin.

DIP7 Package Dimension

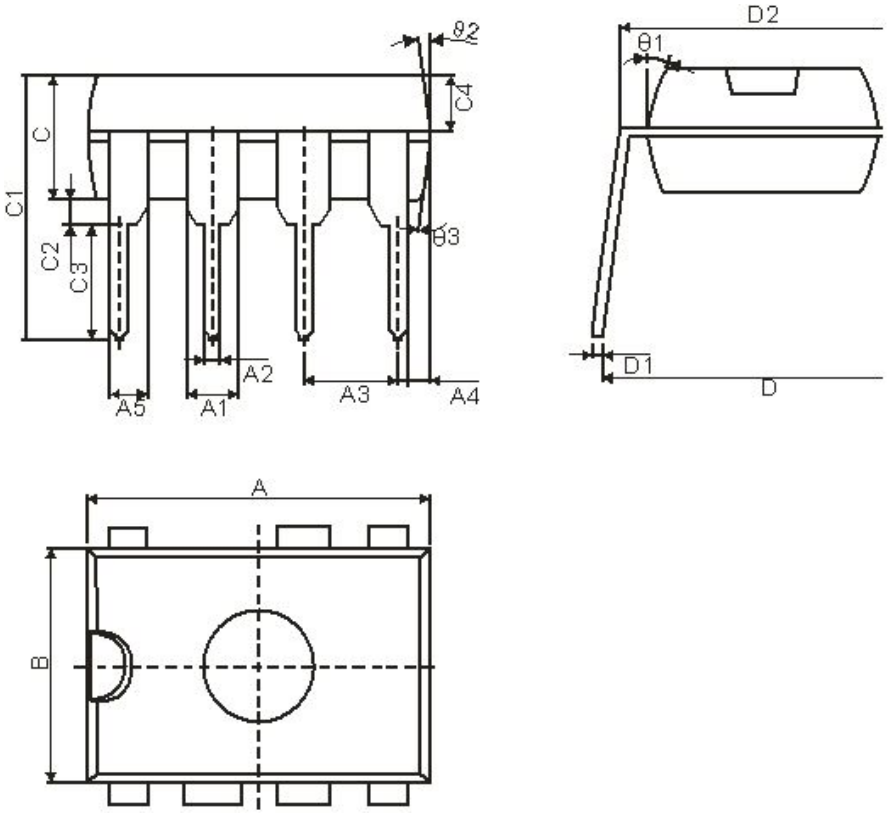

Winsemi				
Symbol	Dimensions in Millimeters		Dimensions in Inches	
	Min	Max	Min	Max
A	9.00	9.50	0.354	0.374
B	6.10	6.60	0.240	0.260
C	3.0	3.4	0.118	0.134
A1	1.474	1.574	0.058	0.062
A2	0.41	0.53	0.016	0.021
A3	2.44	2.64	0.096	0.104
A4	0.51TYP		0.02TYP	
A5	0.99TYP		0.04TYP	
C1	6.6	7.30	0.260	0.287
C2	0.50TYP		0.02TYP	
C3	3.00	3.40	0.118	0.134
C4	1.47	1.65	0.058	0.065
D	7.62	9.3	0.300	0.366
D1	0.24	0.32	0.009	0.013
D2	7.62TYP		0.3TYP	

NOTE:

1.We strongly recommend customers check carefully on the trademark when buying our product; if there is any question, please don't be hesitate to contact us.

2.Please do not exceed the absolute maximum ratings of the device when circuit designing.

3.Winsemi Microelectronics Co., Ltd reserved the right to make changes in this specification sheet and is subject to change without prior notice.

CONTACT:

Winsemi Microelectronics Co., Ltd.

ADD:Futian District, ShenZhen Tian An Cyber Tech Plaza two East Wing 1002
Post Code : 518040
Tel : +86-755-8250 6288
FAX : +86-755-8250 6299
Web Site : www.winsemi.com