WS3110 High Performance LED Driver

Features

- Fast start-up time
- Low operation current (0.6mA)
- PSR control with Single stage PFC topology
- CC±5%
- Programmable output current and output voltage
- Internal Line and Load compensation
- Internal soft-start
- Built in Leading edge blanking (LEB)
- Cycle-by-cycle Over-Current Protection
- VCC over-voltage protection (VCC-OVP)
- VCC under voltage lockout (UVLO）
- Over temperature protection (OTP)
- Transformer saturation protection
- Inter power-mos saturation protection
- Output LED open/short protection
- CS pin open/short protection

Applications

- LED lighting
- Down light
- Tube lamp
- PAR lamp
- Bulb

General Description

WS3110 is a power factor correction，primary-side-control LED lighting driver with advanced features to provide high efficiency control for lighting application.

WS3110 applies source driver technology，its internal fast start-up circuit greatly shorten the start-up time while keeping extremely low standby power consumption.

With internal line-compensation, the WS3110 provides accurate constant current (CC ± 5%) regulation at universal AC input.

WS3110 offers complete protection coverage with automatic self-recovery feature including cycle by cycle over current protection (OCP), VCC over-voltage protection (VCC-OVP) and under voltage lockout (UVLO), output LED short/open protection, CS pin short/open protection, and over-temperature protection (OTP). The gate-driven output ST is clamped to maximum 15V to protect the external MOSFET. Excellent EMI performance is achieved by using soft-driver technology.

WS3110 is offered in SOP-8 packages.

Typical Application Circuit

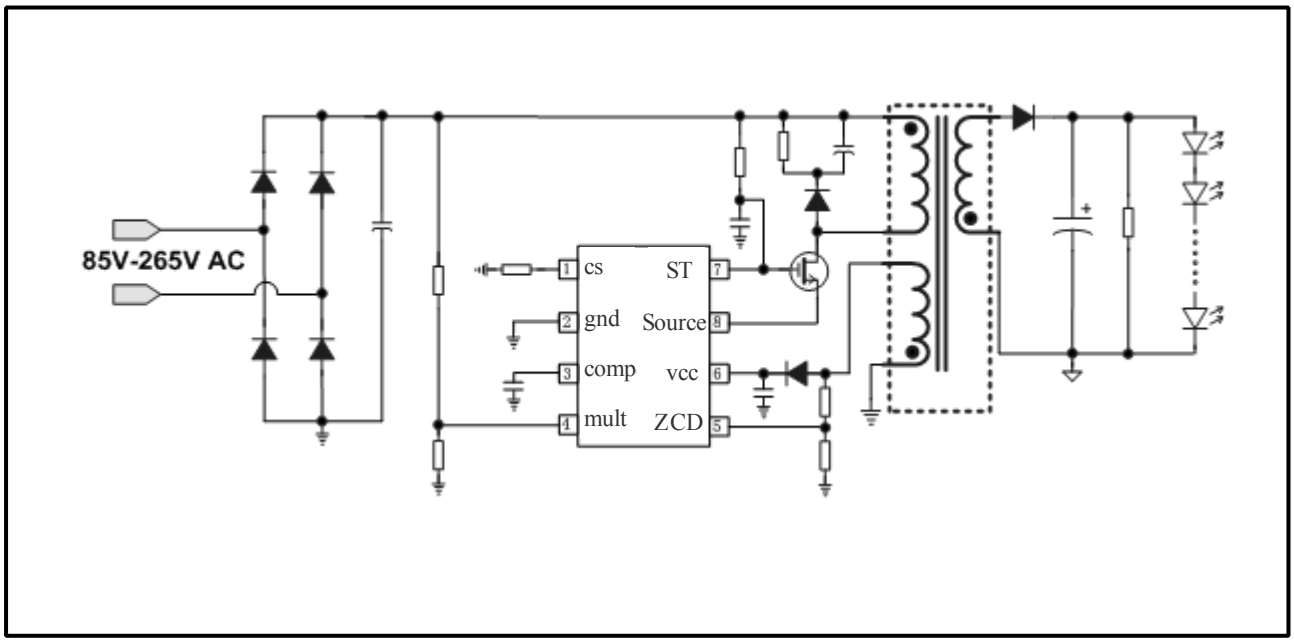

Copyright@Winsemi Microelectronics Co., Ltd., All right reserved.

Pin Definition and Device Marking

WS3110 is offered in SOP-8 packages，as shown below：

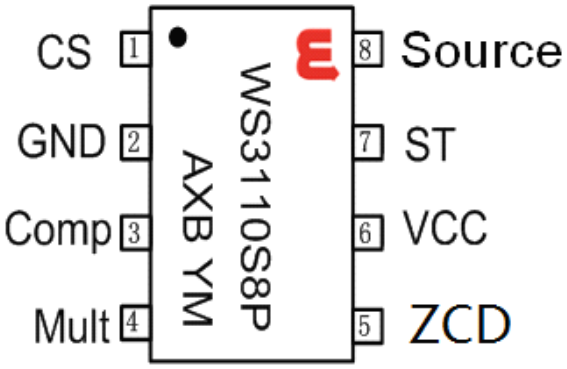

WS3110S8P:
A: Product Code
X: Internal Code
B：Area Code
YM：Year Month

Pin Function Description

Pin Name	Pin No. DIP8/SOP8	Pin Type	Function Description
CS	1	I	Current sense input pin
GND	2	P	Ground. pin of the IC
COMP	3	I/O	Output of the error amplifier, connect a capacitor to ground for loop compensation
MULT	4	I	Input of the multiplier, connect this pin to line voltage via a resistor divider to detect the sinusoidal line voltage
ZCD	5	I	Zero current detection and out voltage feedback pin, connect this pin through a resistor divider from the auxiliary winding to ground, It use for out voltage feedback
VCC	6	P	Supply voltage of the IC
ST	7	P	Start-up pin ,connect to the gate of power-mos
Source	8	O	Source driver output, connect to the source of power-mos

Block Diagram

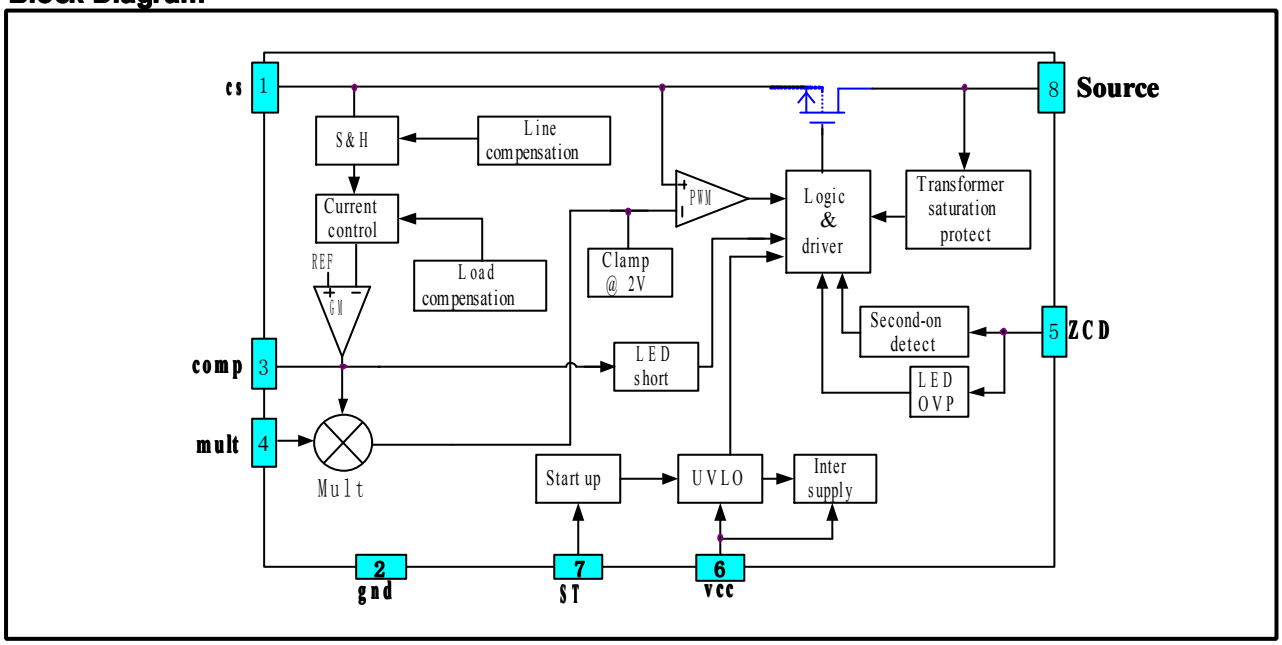

Steady, keep you advance

Ordering Information

Package	IC Marking Information	Purchasing Device Name
8-Pin SOP8, Pb-free	WS3110S8P	WS3110S8P

Recommended Operating Condition

Symbol	Parameter	Value	Unit
VCC	VCC Supply Voltage	10~25	V
T_A	Operating temperature	-20~85	℃

Absolute Maximum Ratings

Symbol	Parameter	Value	Unit
VCC	DC Power Supply	25	V
V_{ZCD}	ZCD input voltage	-0.3~7	V
V_{CS}	CS input voltage	-0.3~7	V
V_{COMP}	COMP input voltage	-0.3~7	V
V_{MULT}	MULT input voltage	-0.3~7	V
V_{ST}	ST input voltage	15	V
V_{Source}	Soruce input voltage	25	V
T_J	Operation Junction Temperature	-20~150	℃
T_{STG}	Storage Temperature	-40~150	℃
I_{ST}	ST Clamp Continuous Current	10	mA

Note 1: Stresses above those listed under Absolute Maximum Ratings may cause permanent damage to the device. These are stress ratings only, functional operation of the device at these or any other conditions beyond those indicated in the Recommended Operating Conditions section are not implied. Exposure to absolute maximum-rated conditions for extended periods may affect device reliability.

ESD Information

Symbol	Parameter	Value	Unit
$V_{ESD-HBM}$	Human body model on all pins	2	KV
V_{ESD-MM}	Machine model on all pins	200	V

Electrical Characteristics(Unless otherwise specified，T_A=25℃，V_{CC}=16V)

Supply Voltage (VCC)						
symbol	**parameter**	**Test condition**	**Min**	**Typ**	**Max**	**Unit**
I_VCC_ST	Start up current	VCC=(UVLO_OFF -1)V		40	70	uA
I_VCC_OP	Operation Current	Fsw=60KHz		0.6	1.2	mA
Iq	Static Current	VCC=14V, No switching		0.32	0.6	mA
UVLO_ON	Turn on threshold Voltage	VCC falling	5.2	5.8	6.5	V
UVLO_OFF	Turn-off threshold Voltage	VCC rising	10	11	12	V
VCC_hold	VCC hold voltage	VCC falling	7	7.5	8	V
OVP	Over voltage protection Threshold	Ramp VCC until no-switching		25.8		V
Start up section (ST)						
ST_clamp_be	ST clamp before UVLO	Ist=1mA，VCC=10V	16	17	18	V
ST_clamp_af	ST clamp after UVLO	VCC=14V	14	15	16	V
I_{ST}_be	I_{ST} before UVLO	ST=14V，VCC=10V		20	35	uA
I_{ST}_af	I_{ST} after UVLO	ST=14V，VCC=14V		35	60	uA
Error Amplifier Section						
V_{REF}	Reference voltage for EA		0.294	0.3	0.306	V
Comp_clamp	Comp low-clamp voltage			1.5		V
Vcomp	Linear operating range		1.5		3.5	V
Vth_short	Output short threshold			4.5		V
MULT Section						
V_{MULT}	Linear operating range		0		2.5	V
ZCD Section						
VZCD	Demagnetization threshold	ZCD falling		0.4		V
VZCD_hys	VZCD threshold hysteresis	ZCD risind		0.6		V
ZCD_ovp	LED open-protect threshold			5.5		V
Toff_min	Minimum OFF time			4		us
Toff_max	Maximum OFF time			150		us
CS Section						
Vth_ocp	Circle by circle OCP threshold			2.0		V
TLEB	LEB time			350		ns
Td	Delay to output			180		ns
S Section						
Rds_on		VCC=7.5V，Ids=1A		0.3		Ω

Vds_OVP	Inter power mos saturation protection	Vds =(Vsource-Vcs)		2.1		V
Vd_OVP	Transformer saturation protection			3.3		V
Temperature Section						
OTP	Over temperature protection			150		℃

Function Description

WS3110 is a primary-side control with single stage PFC controller targeting at LED lighting applications. The transition mode control greatly reduces the switch turn-on loss, improves the conversion efficiency and EMI performance. It provides very good power factor and low THD.

Startup Current and Startup Control

The line current charge up the ST capacitor via a start-up resistor (the internal start up circuit will consume 20 uA current), the VCC voltage will follow the ST voltage (ST is clamp to 16V at start-up stage), and quickly over UVLO threshold, then the startup circuit is shut down, VCC get power from auxiliary winding, and ST is clamp at 14V to driver the power MOS, and the VCC over voltage threshold is set to be 25.8V. At normal operation condition, when VCC is lower then 7.5V, the startup circuit will be wake up to hold the VCC voltage until VCC higher than 8V.

Operating Current

The operating current of WS3110 is low to 0.6mA .Good efficiency and low standby power is achieved with low operating current

Demagnetization， Line-compensation and output voltage detection

By using a auxiliary winding of the transformer, the WS3110 can perform zero current detection. When the stored energy is fully released to the output, the voltage at ZCD decrease. A negative-going edge triggers MOSFET’s turn-on

At the primary ON time, the ZCD pin can indirectly detect the line voltage, and be used to Line-compensation, the compensation rate can be programmable by adjust the upper resistor of the auxiliary winding divider

At the secondary ON time, the auxiliary voltage as follow :

$$V_{AUX} = \frac{N_{AUX}}{N_S} * (V_o + \Delta V)$$

Vo is output voltage , ΔV is the forward voltage of the rectifier diode. So that ZCD can sense the output voltage via the auxiliary winding divider. When ZCD is higher than 5.5V, the LED open protection is trigger; the system will enter automatic self-recovery station.

Programmable output Current

The output current can be programmable by adjust the resistor between CS and GND. The LED output current is as follow:

$$I_{out} = \frac{N_p}{N_S} \times \frac{V_{REF}}{2 \times R_{CS}}$$

While VREF is the reference voltage of the amplifier of the CC loop, and Rcs is the current sense resistor from CS pin to GND, Np/Ns is the The turns ratio of the primary and secondary of the transformer.

Transition mode and switching frequency

The WS3110 operates in transition mode, the frequency varies depending on the line voltage and the load condition, and the maximum switching frequency is internal limited by the minimum OFF time (4us) to 250KHz.

During start-up or output short circuit, the output voltage is too low, and the voltage of ZCD is lower than 0.4V threshold, the demagnetization cannot be detected, then the switching frequency is set by the maximum OFF time (150us) to be 7KHz,

Current Sensing and Leading Edge Blanking

The Cycle-by-Cycle current limiting is offered in WS3110.

The switch current is detected by a sense resistor into the SENSE pin. The internal Leading-edge blanking chops off the sense voltage spike at initial MOSFET on state due to snubber diode circuit reverse recovery and thus reduce the external RC filter circuit. The current limit comparator is disabled and cannot turn off the external MOSFET during the blanking period. PWM duty cycle is determined by voltage level at comp pin and mult pin.

Error Amplifier and soft-start

The comp pin is the error amplifier output of WS3110, and a 1 uF capacitor is connect from comp to GND to make the CC loop stable.

During the startup period, an internal 300uA current will quickly charge up comp to 1.5V, then the CC loop will adjust the comp voltage according to the load condition. Since the sink/source current of the error amplifier is very small, the voltage of comp will rise slowly after startup, and the PWM duty also increase slowly, so that the soft-start is realized. The soft-start time depends on the value of the compensation capacitor.

Saturation protection of transformer

The Source pin of WS3110 is used to detect the operating state of the transformer and the internal power MOS. When the Vds of the internal power mos (voltage between Source pin and CS pin) is over 2.1V, the internal power MOS saturation protection is triggered; and when the voltage of pin Source is over 3.3V, the transformer saturation protection will be triggered

Protection Controls

Good power supply system reliability is achieved with auto-recovery protection features including cycle by cycle over current protection (OCP), VCC over-voltage protection (VCC-OVP) and under voltage lockout (UVLO), output LED short/open protection, CS pin short/open protection, and over-temperature protection (OTP).

SOP-8 Package Information

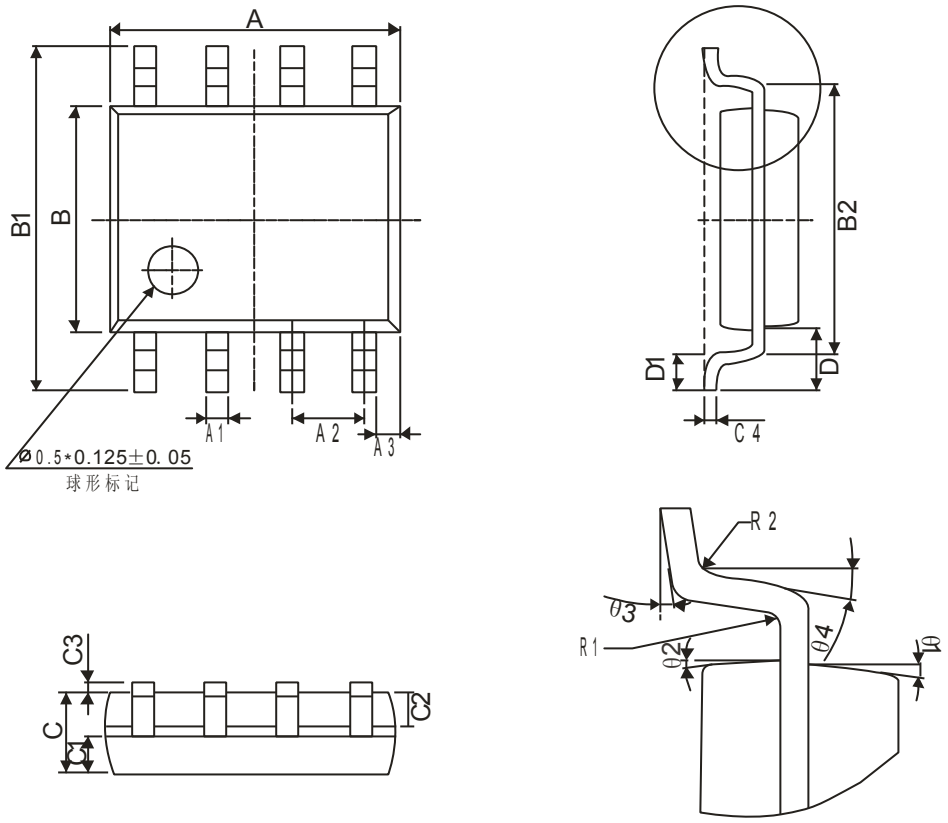

Symbol	Winsemi			
	Dimensions in Millimeters		Dimensions in Inches	
	Min	Max	Min	Max
A	4.70	5.10	0.185	0.201
B	3.70	4.10	0.146	0.161
C	1.30	1.50	0.051	0.059
A1	0.35	0.48	0.014	0.019
A2	1.27TYP		0.05TYP	
A3	0.345TYP		0.014TYP	
B1	5.80	6.20	0.228	0.244
B2	5.00TYP		0.197TYP	
C1	0.55	0.70	0.022	0.028
C2	0.55	0.70	0.022	0.028
C3	0.05	0.225	0.002	0.009
C4	0.203TYP		0.008TYP	
D	1.05TYP		0.041TYP	
D1	0.40	0.80	0.016	0.031