Model WS10SG
with analog or SSI output

Very compact sensor for industrial applications

- **Protection class IP54**
- **Measurement ranges:**
  0 ... 100 mm to 0 ... 1250 mm
- **Analog output 0 … 10 V, 4 … 20 mA, potentiometer or A/D converted synchronous serial output (SSI)**

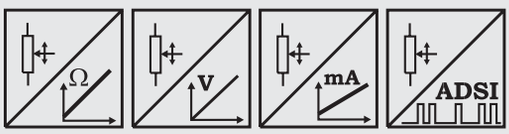

Specifications	Outputs	Potentiometer: 1 kΩ
		Voltage: 0...10 V
		Current: 4...20 mA, 2 or 3 wire
		Voltage and current output, adjustable
		A/D converted synchronous serial 16 bit max. (SSI)
	Resolution	Essentially infinite; ADSI16: max. 16 bit full scale
	Material	Aluminium, stainless steel and plastic; Cable: stainless steel
	Sensing Device	Precision potentiometer
	Connector	Male socket 8 pin (M12 or DIN 45326)
	Linearity	Up to ±0.05 % full scale
	Protection Class	IP54
	Weight	350 g approx.
	Environmental	
	EMC	Refer to output specification
	Temperature	Refer to output specification

Bestellcode WS10SG Analog or SSI

WS10SG – □ – □ – □ – □ – □

Model Name

Measurement Range (in mm)
100 / 125 / 375 / 500 / 750 / 1000 / 1250

Outputs (see pages 57 ff.)

R1K = Potentiometer 1 kΩ (other values on request)
10V = With 0 ... 10 V signal conditioner
420A = With 4 ... 20 mA signal conditioner (2 wire)
420T = With 4 ... 20 mA signal conditioner (3 wire)
PMU = With 0...10 V/4...20 mA signal conditioner, adjustable
ADSI16 = With A/D converted synchronous serial output 16 bit (option: 12, 14 bit)

Linearity
L10 = ±0.10 % option: L05 = ±0,05 % L25 = ±0.25 %
Other values on request

Cable fixing
M4 = M4 cable fixing
SB0 = Cable clip

Connection
M12 = 8 pin socket M12
D8 = 8 pin socket DIN 45326

Order Code Mating Connector (see accessories p. 82) **D8:** **CONN-DIN-8F-W** **M12:** **CONN-M12-8F-G**

Order Example: WS10SG - 1250 - 10V - L10

Model WS10SG
with analog or SSI output

Cable Forces typical at 20 °C	Range	Maximum pull-out force	Minimum pull-in force
	mm	[N]	[N]
	100	4.7	3.0
	125	4.6	2.4
	375	7.4	3.9
	500	5.5	2.8
	750	7.6	3.8
	1000	5.3	2.9
	1250	4.6	2.4

Outline drawing

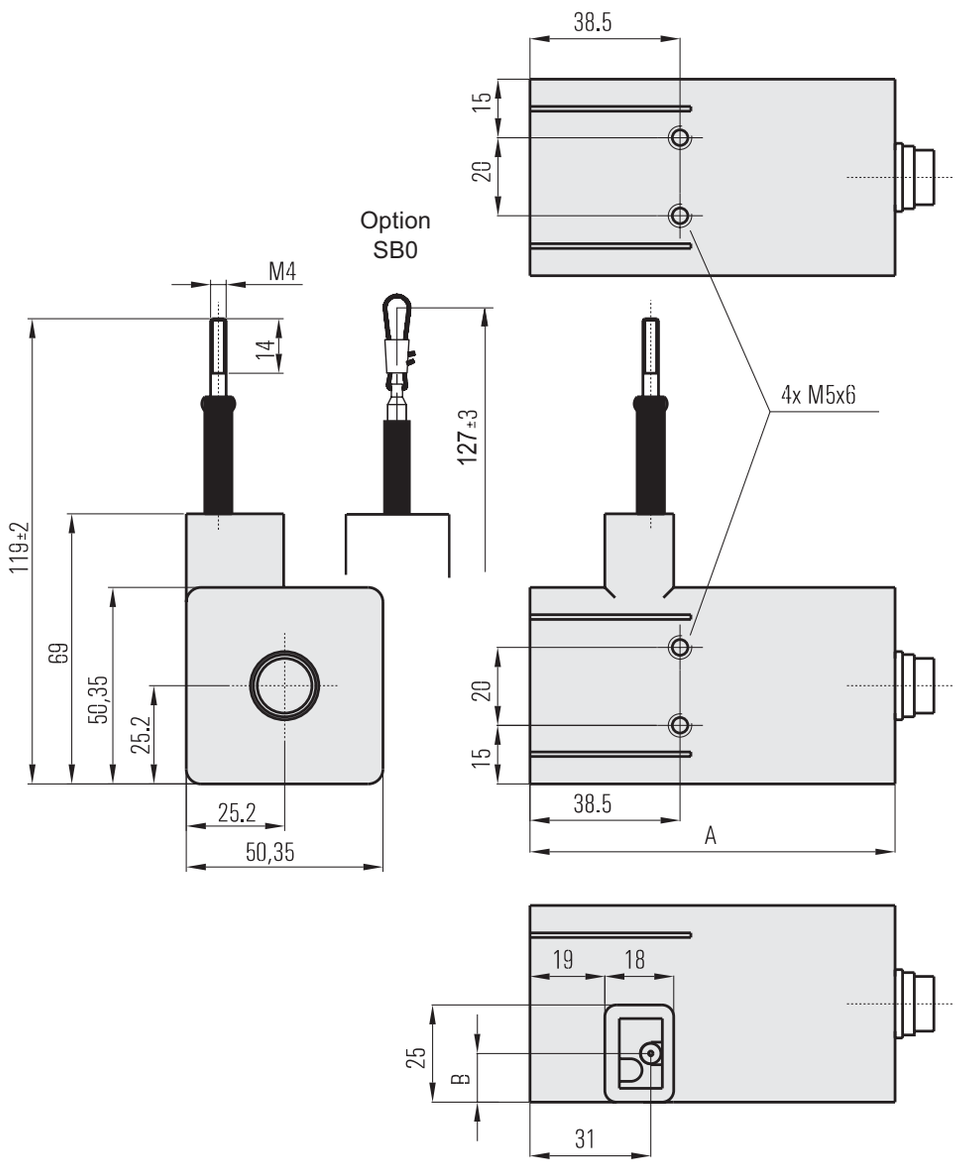

Dimensions informative only.
For guaranteed dimensions consult factory

Dimensions	Range	A [mm]	B [mm]
	[mm]		
	375, 750	95.5	12.5
	100, 125, 500, 1000, 1250		8.25

Model WS10SG
with incremental encoder output

Very compact sensor for industrial applications

- **Protection class IP54**
- **Measurement range:**
  0 ... 1250 mm
- **With incremental encoder output**

Specifications

Outputs	Incremental encoder output with differential push-pull circuit for reliable data transmission. The output is compatible with TTL or HTL.
Resolution	10 pulses per mm (1/40 mm with external edge counting mode)
Material	Aluminium, stainless steel and plastic. Cable: stainless steel
Sensing Device	Incremental encoder
Connector	Male socket 8 pin (M12 or DIN 45326)
Linearity	±0.05 % full scale; other values on request
Protection Class	IP54
Weight	400 g approx.
Environmental	
EMC	Refer to output specification
Temperature	Refer to output specification

Order Code WS10SG incremental

WS10SG – ☐ – ☐ – ☐ – ☐ – ☐

Model Name

Measurement Range (in mm)
1250 (all smaller measurement ranges included)

Pulses per mm
10 = 10 pulses per mm
25 = 25 pulses per mm
Other numbers of pulses on request

Output (see page 60)
IE24LI = Incremental output TTL compatible inverted
IE24HI = Incremental output HTL compatible inverted
PP530 = Do not use for further developments

Cable fixing
M4 = M4 cable fixing
SB0 = Cable clip

Connection
M12 = 8 pin socket M12
D8 = 8 pin socket DIN 45326

Order Code Mating Connector (see accessories p. 82) **D8: CONN-DIN-8F-W** **M12: CONN-M12-8F-G**

Order Example: WS10SG - 1250 - 10 - IE24HI - M4 - M12

Model WS10SG
with incremental encoder output

Cable Forces typical at 20 °C	Resolution Pulses per mm	Maximum pull-out force [N]	Minimum pull-in force [N]
	10	5.8	3.0

Outline Drawing

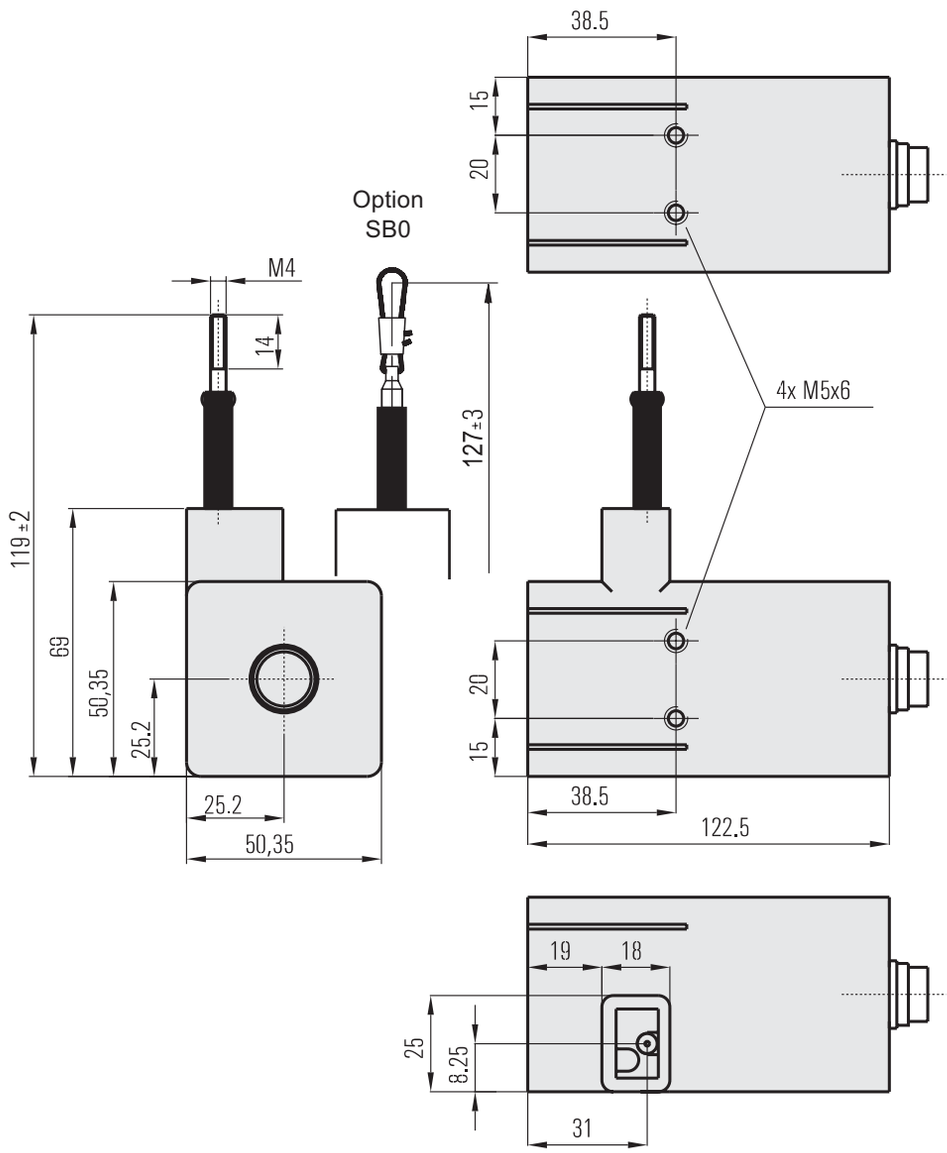

Dimensions informative only.
For guaranteed dimensions consult factory

Output Specifications
R1K and 10V for WS position sensors

Voltage divider R1K Potentiometer	Excitation Voltage	32 VDC max. at 1 kΩ (input power 1 W max.)
	Potentiometer Impedance	1 kΩ ±10%
	Thermal coefficient	±25 x 10^{-6}/ °C full scale
	Sensitivity	Depends on measurement range, individual sensitivity of sensor specified on label
	Voltage Divider Utilization Range	Approx. 3% ... 97% of full range
	Operating Temperature	-20 ... +85 °C

Signal diagram

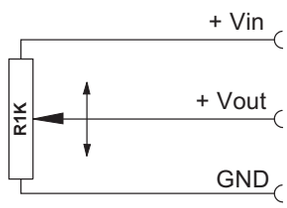

Note: The potentiometer must be connected as a voltage divider. The input impedance of the following processing circuit should be 10 MΩ min.

Signal conditioner 10V Voltage output	Excitation Voltage	+18 ... +27 V DC non stabilized
	Excitation Current	20 mA max.
	Output Voltage	0 ... +10 V DC
	Output Current	2 mA max.
	Output Load	> 5 kΩ
	Stability (Temperature)	±50 x 10^{-6} / °C full scale
	Protection	Reverse polarity, short circuit
	Output Noise	0,5 mV_{RMS}
	Operating Temperature	-20 ... +85 °C
	EMC	According to EN 61326:2004

Signal diagram

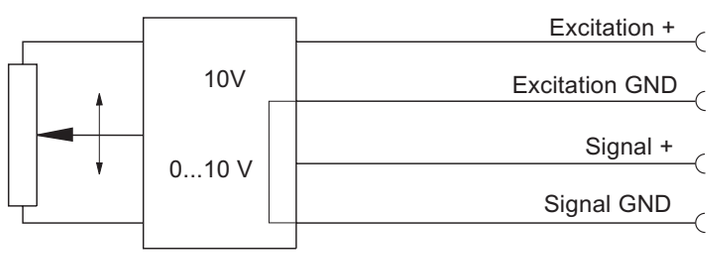

Signal Wiring	**Output signals R1K**	**10V**	**Cable color**	**Connector pin no.**
	+ Vin	Excitation +	White	1
	GND	Excitation GND	Brown	2
	+ Vout	Signal +	Green	3
		Signal GND	Yellow	4

Connection
Mating Connector

View to solder terminals

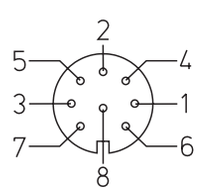

CONN-DIN-8F-W

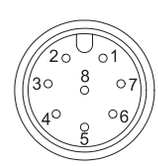

CONN-M12-8F-G

Output Specifications
420A and 420T for WS position sensors

Signal conditioner 420A Current output (2 wire) 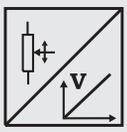	Excitation Voltage	+12 ... 27 VDC non stabilized, measured at the sensor terminals
	Excitation Current	35 mA max.
	Output Current	4 ... 20 mA equivalent to 0 ... 100% range
	Stability (Temperature)	±100 x 10^{-6} / °C full scale
	Protection	Reverse polarity, short circuit
	Output Noise	0.5 mV_{RMS}
	Operating Temperature	-20 ... +85 °C
	EMC	According to EN 61326:2004

Signal Diagram

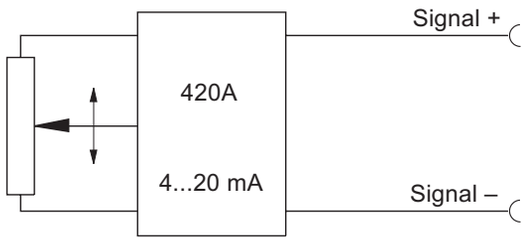

Signal Conditioner 420T Current output (3 wire) 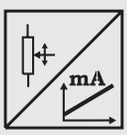	Excitation Voltage	+18...+27 V DC non stabilized
	Excitation Current	40 mA max.
	Load Resistor	350 Ω max.
	Output Current	4 ... 20 mA equivalent to 0 ... 100% range
	Stability (Temperature)	±50 x 10^{-6} / °C full scale
	Protection	Reverse polarity, short circuit
	Output Noise	0.5 mV_{RMS}
	Operating Temperature	-20 ... +85 °C
	EMC	According to EN 61326:2004

Signal diagram

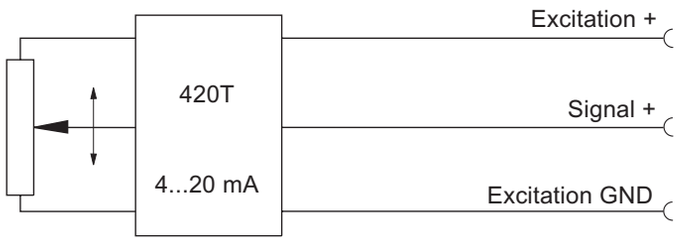

Signal Wiring

Output signals 420A	420T	Cable color	Connector pin no.
Signal +	Excitation +	White	1
Signal –	Excitation GND	Brown	2
	Signal +	Green	3

Connection
Mating Connector

View to solder terminals

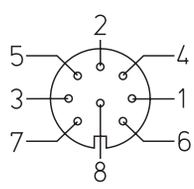

CONN-DIN-8F-W

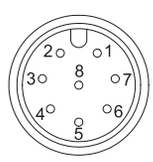

CONN-M12-8F-G

Output Specification
PMU for WS position sensors

Signal Conditioner PMU, adjustable Voltage output and current output (3 wire) 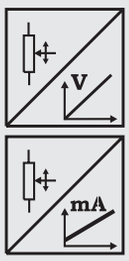	Excitation voltage	+18 ... 27 V DC
	Excitation current	50 mA max.
	Voltage output Output current Output load	0 ... 10 V 10 mA max. 1 kΩ min.
	Current output Load resistor	4 ... 20 mA (3 wire) 500 Ω max.
	Adjustment Activation of offset and gain adjust Scalable range	 Connect with excitation GND (0 V) 90 % max. full scale
	Stability (Temperature)	±50 x 10^{-6} / °C full scale
	Protection	Reverse polarity, short circuit
	Output noise	1 mV_{eff}
	Operating temperature	-20 ... +85 °C
	EMC	According to EN 61326:2004

Signal diagram

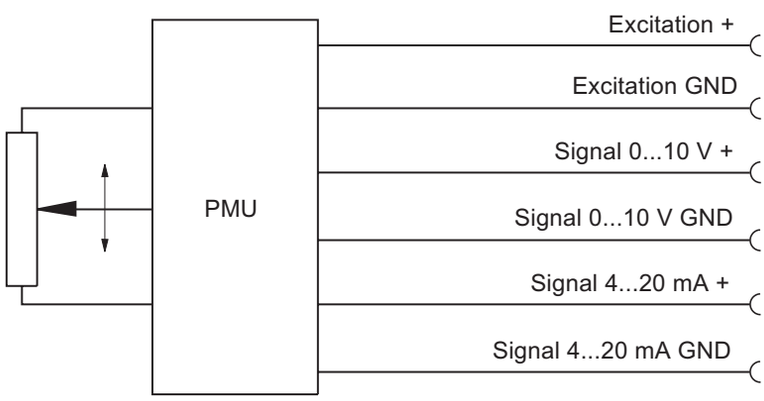

Signal wiring

Output signals	Connector pin no.
Excitation +	1
Excitation GND	2
Signal 0...10 V +	3
Signal 0...10 V GND	4
Signal 4...20 mA +	5
Signal 4...20 mA GND	6
Offset	7
Gain	8

Connection
Mating Connector

View to solder terminals

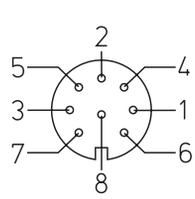

CONN-DIN-8F-W

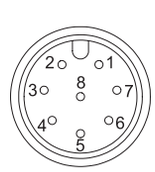

CONN-M12-8F-G

Output Specification
ADSI16 for WS position sensors

- **Resolution 16 bit, data transmission synchronous serial/SSI**
- **Optional available with 12 bit (ADSI) or 14 bit (ADSI14) resolution**
- **No loss of data at power-down**
- **Easy to connect to PLC's with SSI input circuit**

Description

The sensing device of the ADSI is a precision potentiometer. The position information is given by an analog/digital converter output serialized as a data word. Data transmission takes place by means of the signals CLOCK and DATA. The processing unit (PLC, Micro-computer) sends pulse sequences which clock the data transmission with the required transfer rate. With the first falling edge of a pulse sequence the position of the sensor is recorded and stored. The following rising edges control the bit-by-bit A/D conversion, encoding and output of the data word. After a delay time the next new position information will be transmitted.

Data Format
(Train of 26 Pulses)

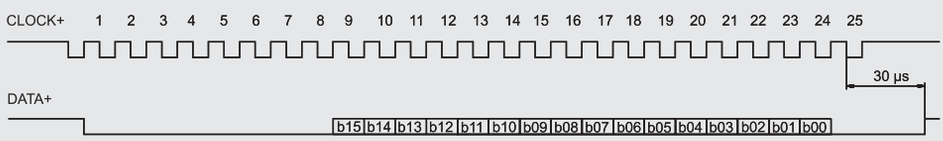

Signal Conditioner ADSI
A/D converted synchronous serial

Output	EIA RS-422, RS-485, short-circuit proof
Excitation voltage	11 ... 27 VDC
Excitation current	200 mA max.
Clock frequency	70 ... 500 kHz
Code	Gray code, continuous progression
Delay between pulse trains	T=30 µs min.
Resolution	16 bit (65536 counts) full scale; optional 12 bit or 14 bit
Stability (temperature)	±50 x 10^{-6} / °C full scale
Operation temperature	-20 ... +85 °C
EMC	According to EN 61326:2004

Recommended Processing Input Circuit

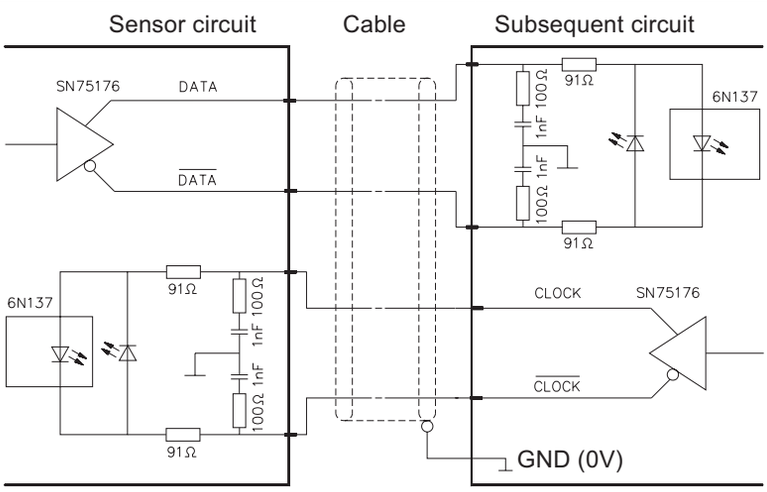

Transmission rate

Cable length	Baud rate
< 50 m	< 300 kHz
< 100 m	< 100 kHz

Note:
Extension of the cable length will reduce the maximum transmission rate. The signals CLOCK/CLOCK and DATA/DATA must be connected in a twisted pair cable, shielded per pair and common.

Signal Wiring

Signal names	Connector pin no.
Excitation +	1
Excitation GND (0V)	2
CLOCK	3
CLOCK	4
DATA	5
DATA	6
Screen	not connected

Mating connector: view to solder terminals

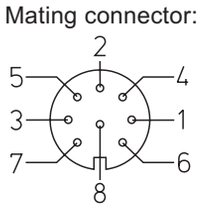

CONN-DIN-8F-W

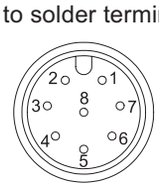

CONN-M12-8F-G

Output Specifications
IE24LI and IE24HI for WS position sensors

IE24LI and IE24HI incremental

	IE24LI	IE24HI
Excitation voltage	5 V DC ±10 %	10 … 30 V DC
Excitation current	100 mA max.	
Output frequency	200 kHz	
Output	Push-pull and inverted signals	
Output current	10 mA max.	
Output voltage	Depending on the excitation voltage	
Stability (temperature)	±20 x 10^{-6} / °C f.s. (sensor mechanism)	
Operation temperature	-20 … +85 °C	
Protection	Short circuit	
EMC	According to EN 61326:2004	

Output signals

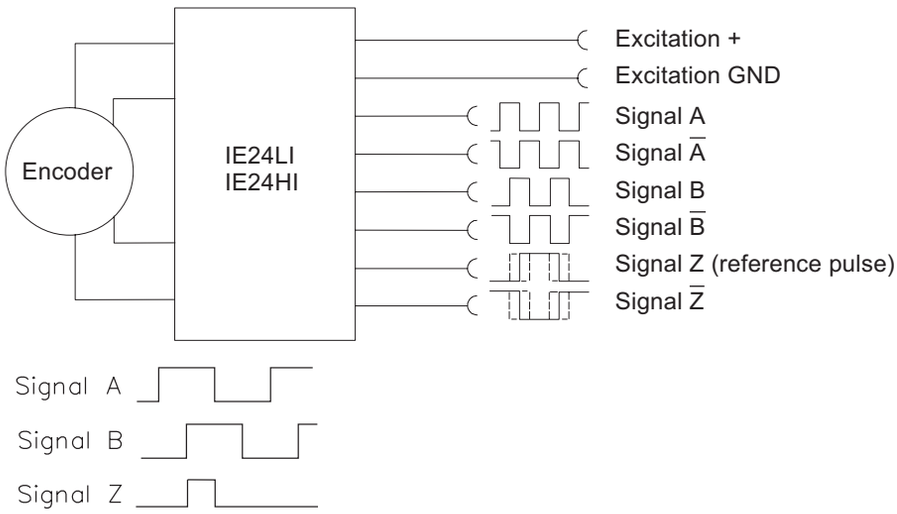

Output circuit and recommended processing input circuit

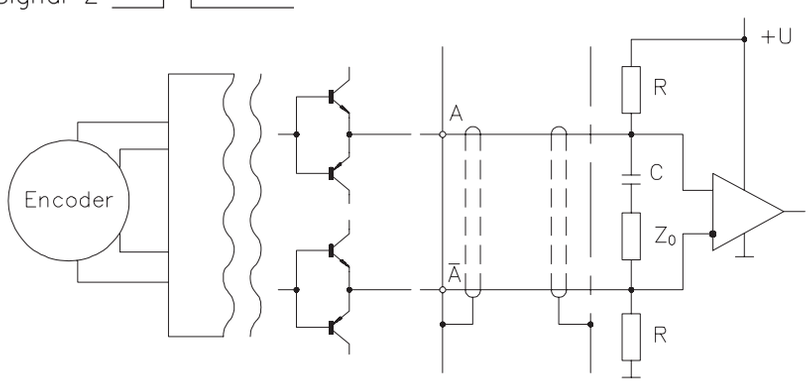

Signal wiring

Output signals	Cable color	Connector pin no.
Excitation +	Brown	1
Excitation GND	White	2
Signal B (A + 90°)	Grey	3
Signal A	Green	4
Signal $\overline{B}$	Pink	5
Signal $\overline{A}$	Yellow	6
Signal Z (reference pulse)	Blue	7
Signal $\overline{Z}$	Red	8

Connection
Mating connector

View to solder terminals

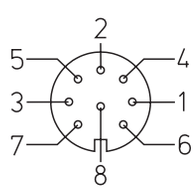

CONN-DIN-8F-W

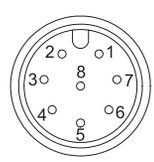

CONN-M12-8F-G

Output Specification
PP530 for WS position sensors

Signal Conditioner PP530 Incremental	Excitation Voltage	+5 ... +30 VDC
	Excitation Current	200 mA max.
	Output Frequency	200 kHz max.
	Output	Linedriver, Push-Pull, CMOS, TTL and HTL compatible
	Output Current	30 mA max., short circuit protection
	Output Voltage	Depends on the excitation voltage (e.g. to obtain TTL-signals the excitation must be 5 V.) Compatible to EIA RS-422/RS-485
	Stability (Temperature)	±20 x 10^{-6} / K full scale (sensor mechanism)
	Operation Temperature	-10 ... +70 °C
	Storage Temperature	-30 ... +80 °C
	Transition Time Positive Edge	250 ns
	Transition Time Negative Edge	250 ns
	Protection	Reverse polarity, short circuit
	EMC	According to EN61326:2004

Signal Diagram

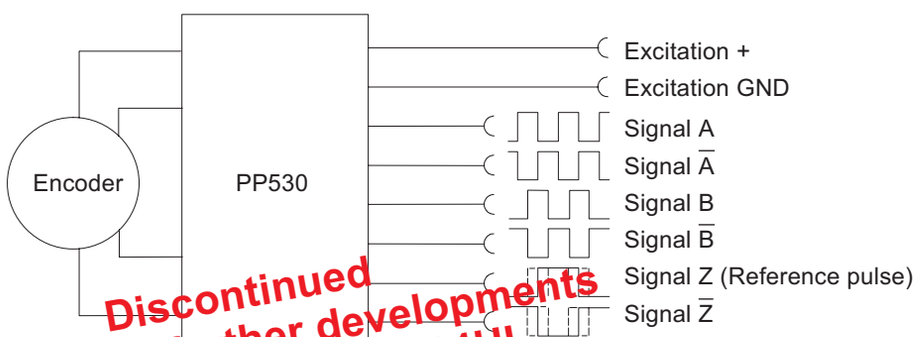

Discontinued
Don´t use for further developments
Replaced by IE24LI/IE24HI

Recommended Processing Circuit

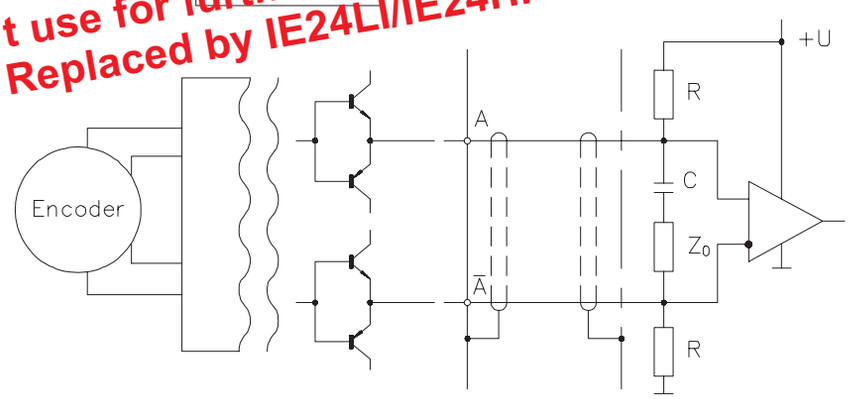

Signal Levels	Excitation	Level	Ia ≤ 5 mA	Ia ≤ 25 mA	-Ia ≤ 5 mA	-Ia ≤ 25 mA
	5 V	Ua_{High}	>4.2 V	>4.2 V	>4.1 V	>3.8 V
	5 V	Ua_{Low}	<0.5 V	<1.2 V	<0.4 V	<0.4 V
	24 V	Ua_{High}	>23.5 V	>23.5 V	>23.5 V	>22.5 V
	24 V	Ua_{Low}	<0.5 V	<1.2 V	<0.4 V	<0.4 V

Signal Wiring / Connection	**Output signals**	**Connector CONN-DIN-8F**
	Excitation +	1
	Excitation GND (0V)	2
	Signal B (A + 90°)	3
	Signal A	4
	Signal $\overline{B}$	5
	Signal $\overline{A}$	6
	Signal Z (reference pulse)	7
	Signal $\overline{Z}$	8

Mating connector
View to solder terminals

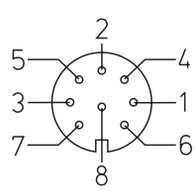

CONN-DIN-8F-W