Kingbright

T-1 (3mm) TRI-LEVEL LED INDICATOR

Part Number: WP937SA/3EGW

High Efficiency Red
Green

Features

- Pre-trimmed leads for pc mounting.
- Black case enhances contrast ratio.
- Wide viewing angle.
- High reliability life measured in years.
- Housing UL rating:94V-0.
- Housing material: type 66 nylon.
- RoHS compliant.

Descriptions

- The High Efficiency Red source color devices are made with Gallium Arsenide Phosphide on Gallium Phosphide Orange Light Emitting Diode.
- The Green source color devices are made with Gallium Phosphide Green Light Emitting Diode.

Package Dimensions

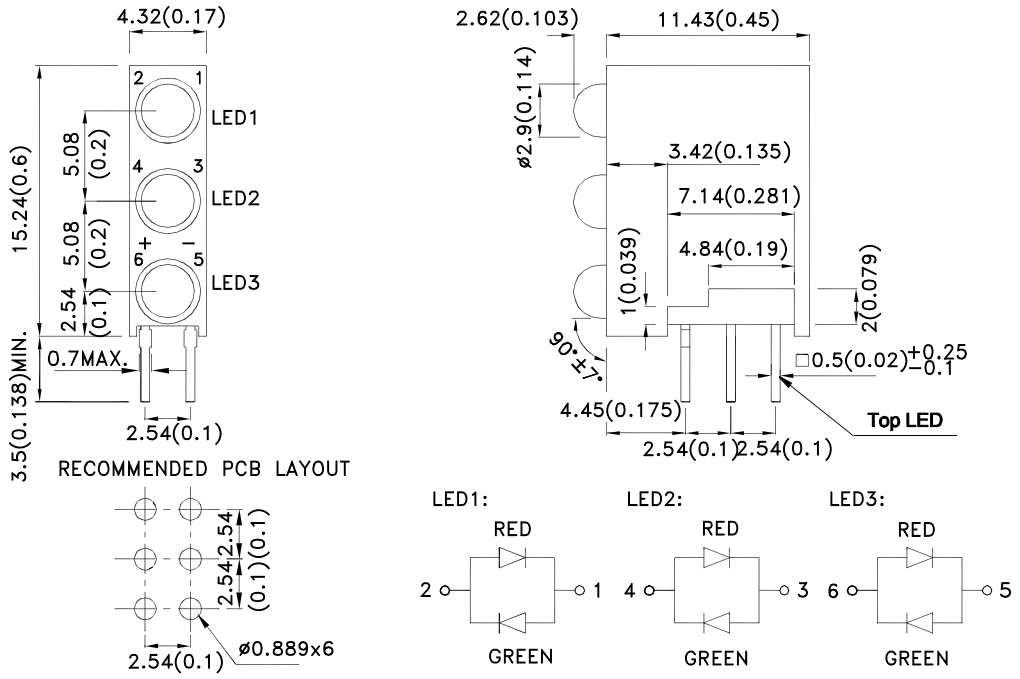

Notes:
1. All dimensions are in millimeters (inches).
2. Tolerance is ±0.25(0.01") unless otherwise noted.
3. Lead spacing is measured where the leads emerge from the package.
4. The specifications, characteristics and technical data described in the datasheet are subject to change without prior notice.

Selection Guide

Part No.	Emitting Color (Material)	Lens Type	Iv (mcd) [2] @ 20mA		Viewing Angle [1]
			Min.	Typ.	2θ1/2
WP937SA/3EGW	High Efficiency Red (GaAsP/GaP)	White Diffused	6	14	60°
			*4	*10	
	Green (GaP)		6	14	
			*6	*14	

Notes:
1. θ1/2 is the angle from optical centerline where the luminous intensity is 1/2 of the optical peak value.
2. Luminous intensity / luminous Flux: +/-15%.
 * Luminous intensity value is traceable to CIE127-2007 standards.

Electrical / Optical Characteristics at TA=25°C

Symbol	Parameter	Emitting Color	Typ.	Max.	Units	Test Conditions
λpeak	Peak Wavelength	High Efficiency Red Green	627 565		nm	I_F=20mA
λD [1]	Dominant Wavelength	High Efficiency Red Green	617 568		nm	I_F=20mA
Δλ1/2	Spectral Line Half-width	High Efficiency Red Green	45 30		nm	I_F=20mA
C	Capacitance	High Efficiency Red Green	15 15		pF	V_F=0V;f=1MHz
V_F [2]	Forward Voltage	High Efficiency Red Green	2 2.2	2.5 2.5	V	I_F=20mA

Notes:
1. Wavelength: +/-1nm.
2. Forward Voltage: +/-0.1V.
3. Wavelength value is traceable to CIE127-2007 standards.
4. Excess driving current and / or operating temperature higher than recommended conditions may result in severe light degradation or premature failure.

Absolute Maximum Ratings at TA=25°C

Parameter	High Efficiency Red	Green	Units
Power dissipation	75	62.5	mW
DC Forward Current	30	25	mA
Peak Forward Current [1]	160	140	mA
Operating / Storage Temperature	-40°C To +85°C		
Lead Solder Temperature [2]	260°C For 3 Seconds		
Lead Solder Temperature [3]	260°C For 5 Seconds		

Notes:
1. 1/10 Duty Cycle, 0.1ms Pulse Width.
2. 2mm below package base.
3. 5mm below package base.
4. Relative humidity levels maintained between 40% and 60% in production area are recommended to avoid the build-up of static electricity – Ref JEDEC/JESD625-A and JEDEC/J-STD-033.

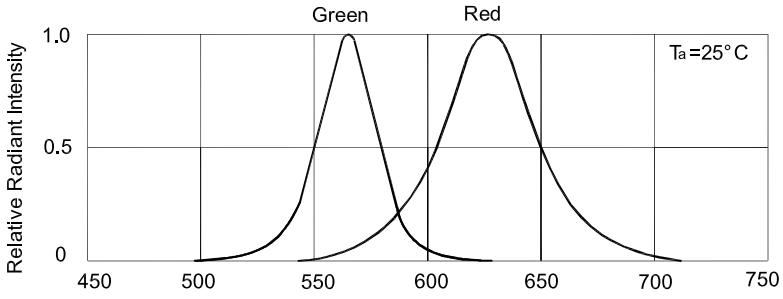

Relative Intensity Vs. Wavelength

WP937SA/3EGW
High Efficiency Red

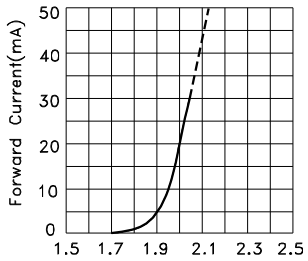

FORWARD CURRENT Vs.
FORWARD VOLTAGE

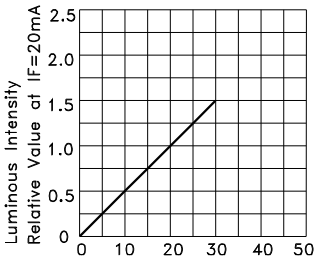

LUMINOUS INTENSITY Vs.
FORWARD CURRENT

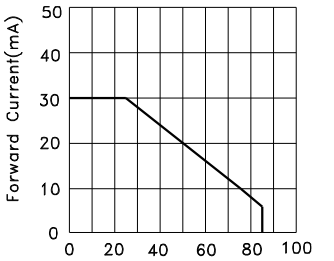

FORWARD CURRENT
DERATING CURVE

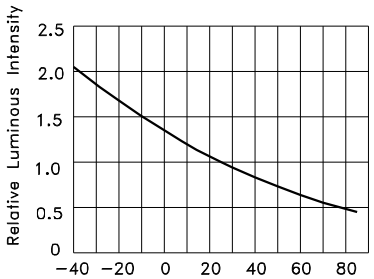

LUMINOUS INTENSITY Vs.
AMBIENT TEMPERATURE

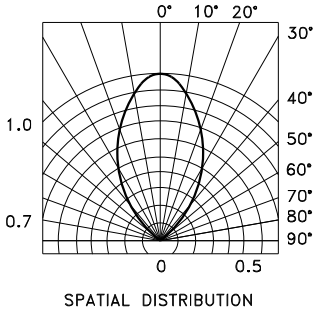

SPATIAL DISTRIBUTION

Green

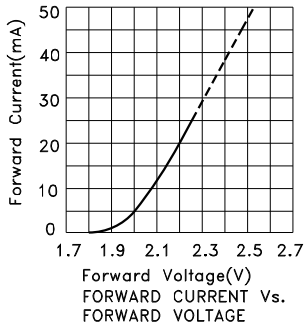

FORWARD CURRENT Vs.
FORWARD VOLTAGE

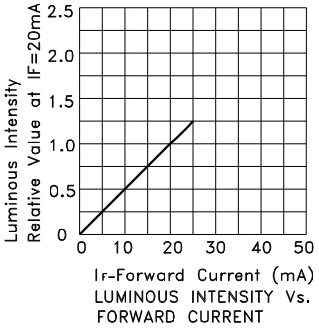

LUMINOUS INTENSITY Vs.
FORWARD CURRENT

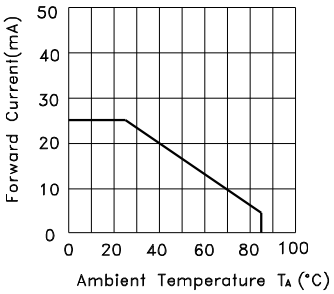

FORWARD CURRENT
DERATING CURVE

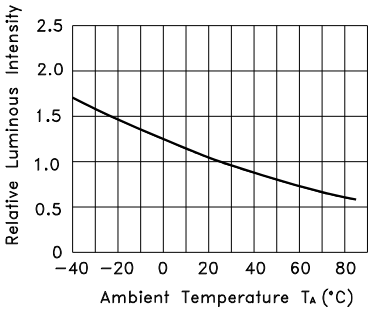

LUMINOUS INTENSITY Vs.
AMBIENT TEMPERATURE

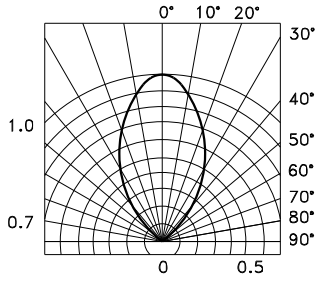

SPATIAL DISTRIBUTION

PACKING & LABEL SPECIFICATIONS **WP937SA/3EGW**

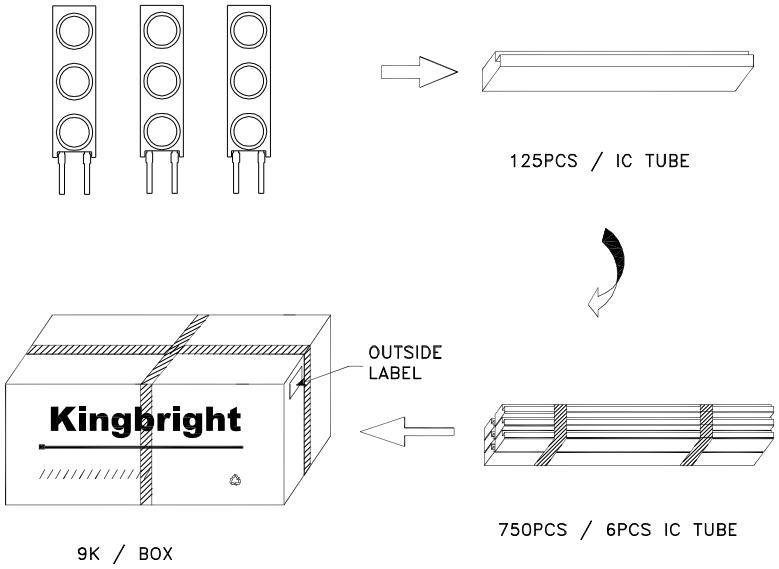

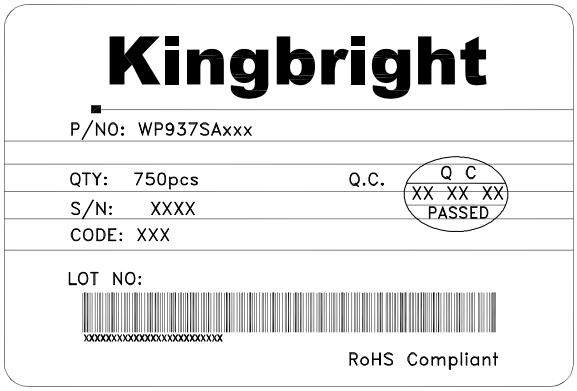

Terms and conditions for the usage of this document

1. The information included in this document reflects representative usage scenarios and is intended for technical reference only.
2. The part number, type, and specifications mentioned in this document are subject to future change and improvement without notice. Before production usage customer should refer to the latest datasheet for the updated specifications.
3. When using the products referenced in this document, please make sure the product is being operated within the environmental and electrical limits specified in the datasheet. If customer usage exceeds the specified limits, Kingbright will not be responsible for any subsequent issues.
4. The information in this document applies to typical usage in consumer electronics applications. If customer's application has special reliability requirements or have life-threatening liabilities, such as automotive or medical usage, please consult with Kingbright representative for further assistance.
5. The contents and information of this document may not be reproduced or re-transmitted without permission by Kingbright.
6. All design applications should refer to Kingbright application notes available at http://www.KingbrightUSA.com/ApplicationNotes

Kingbright

PRECAUTIONS

1. Storage conditions:
   a.Avoid continued exposure to the condensing moisture environment and keep the product away from rapid transitions in ambient temperature.
   b.LEDs should be stored with temperature ≤ 30° C and relative humidity < 60%.
   c.Product in the original sealed package is recommended to be assembled within 72 hours of opening. Product in opened package for more than a week should be baked for 30 (+10/-0) hours at 85 ~ 100° C.

2. The lead pitch of the LED must match the pitch of the mounting holes on the PCB during component placement. Lead-forming may be required to insure the lead pitch matches the hole pitch. Refer to the figure below for proper lead forming procedures.

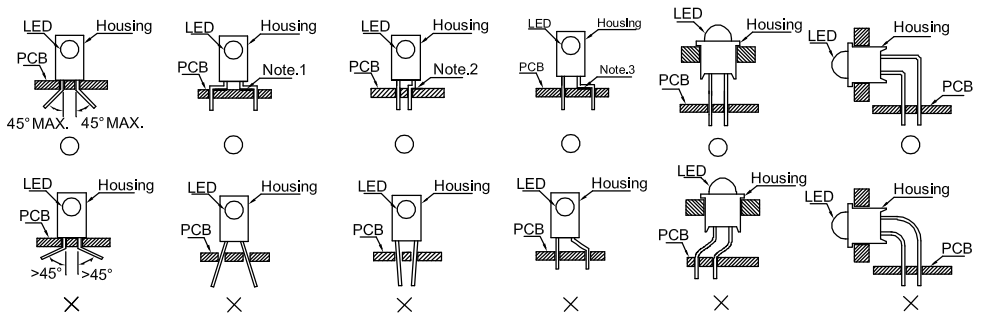

" ○ " Correct mounting method " × " Incorrect mounting method

Note 1-3: Do not route PCB trace in the contact area between the leadframe and the PCB to prevent short-circuits.

3. During soldering, component covers and holders should leave clearance to avoid placing damaging stress on the LED during soldering.

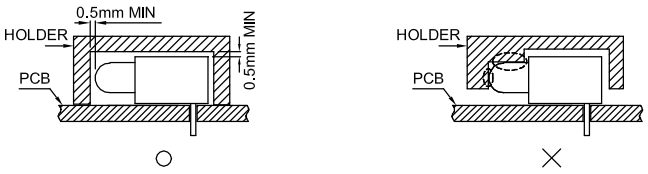

4. The tip of the soldering iron should never touch the lens epoxy.
5. Through-hole LEDs are incompatible with reflow soldering.
6. If the LED will undergo multiple soldering passes or face other processes where the part may be subjected to intense heat, please check with Kingbright for compatibility.
7. Recommended Wave Soldering Profiles:

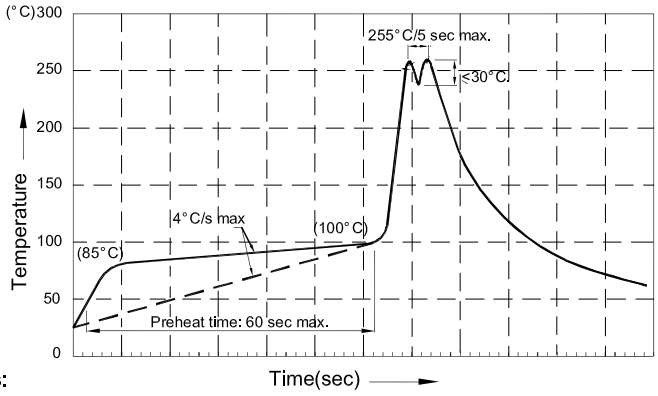

Notes:
1.Recommend pre-heat temperature of 105° C or less (as measured with a thermocouple attached to the LED pins) prior to immersion in the solder wave with a maximum solder bath temperature of 260° C
2.Peak wave soldering temperature between 245° C ~ 255° C for 3 sec (5 sec max).
3.Do not apply stress to the epoxy resin while the temperature is above 85° C.
4.Fixtures should not incur stress on the component when mounting and during soldering process.
5.SAC 305 solder alloy is recommended.
6.No more than one wave soldering pass.