C&D TECHNOLOGIES
Power Solutions

Corporate: www.cdtechno.com
Product: www.cdpowerelectronics.com

WP06R

5-6 Watt High Density, Wide Input Range DC/DC Converter



- 2:1 Input Voltage Range
- Operating Temperature Range: -40°C to +100°C
- Industrial Standard 24 Pin DIL
- Metal Case
- Low Profile 0.4 Inch
- Short Circuit Protection
- Temperature Shutdown
- Overvoltage Protection

The WP06R SERIES is a family of high performance DC/DC converters that offers regulated output power over three input voltage ranges of 9-18V, 18-36V, and 34-75V and over a wide operating temperature range of -40°C to +100°C without derating.

The 200kHz switching frequency and flyback converter topology provide optimum performance in a space-saving package. The design utilizes all surface mounted components, including magnetics, to provide enhanced reliability. All models will operate under no-load conditions, although a minimum load is specified for load regulation measurement purposes.

The converter is packaged in a metal case for improved EMI shielding and immunity, and for superior thermal performance.

Applications include: Telecommunications, Battery Powered Systems, Portable Instruments, Process Control Equipment, Transportation Equipment and Distributed Power Systems.

PRODUCT SELECTION CHART

Specifications are at T_A = +25°C nominal input voltage, rated output current unless otherwise specified.

MODEL*	NOMINAL INPUT VOLTAGE (VDC)	RATED OUTPUT VOLTAGE (VDC)	OUTPUT CURRENT (mA)		INPUT CURRENT (mA)		EFFICIENCY (%)
			MIN LOAD	RATED LOAD	MIN LOAD	RATED LOAD	
WP06R12S05	12	5.0	100	1,000	75	540	75
WP06R12S12	12	12.0	42	416	75	520	77
WP06R12S15	12	15.0	33	333	75	520	77
WP06R12D05	12	+/-5.0	+/-50	+/-500	75	540	75
WP06R12D12	12	+/-12.0	+/-21	+/-208	75	520	77
WP06R12D15	12	+/-15.0	+/-17	+/-167	75	520	77
WP06R24S05	24	5.0	100	1,000	35	265	79
WP06R24S12	24	12.0	50	500	40	305	80
WP06R24S15	24	15.0	40	400	40	305	80
WP06R24D05	24	+/-5.0	+/-50	+/-500	35	265	79
WP06R24D12	24	+/-12.0	+/-25	+/-250	40	310	80
WP06R24D15	24	+/-15.0	+/-20	+/-200	40	310	80
WP06R48S05	48	5.0	100	1,000	18	130	80
WP06R48S12	48	12.0	50	500	22	150	81
WP06R48S15	48	15.0	40	400	22	150	81
WP06R48D05	48	+/-5.0	+/-50	+/-500	18	133	78
WP06R48D12	48	+/-12.0	+/-25	+/-250	22	151	81
WP06R48D15	48	+/-15.0	+/-20	+/-200	22	151	81

NOTES: Other input to output voltages may be available. Please consult factory.

*A "P" at the end of the part number indicates positive ground option. "N" indicates negative ground option — this designator is mandatory.

SPECIFICATIONS, ALL MODELS

Specifications are at T_A = +25°C nominal input voltage, rated output current unless otherwise specified.

	PARAMETER	CONDITIONS	MIN	TYP	MAX	UNITS
INPUT	**INPUT**					
	Voltage Range		9	12	18	V_{DC}
			18	24	36	V_{DC}
			34	48	75	V_{DC}
	Reflected Ripple Current			20		mAp-p
OUTPUT	**OUTPUT**					
	Rated Power	12V Input Models			5.0	W
		5V Output Models			5.0	W
		All Other Models			6.0	W
	Voltage Setpoint Accuracy				±1.5	%
	Temperature Coefficient			±0.02		%/°C
	Line Regulation - Singles	Low Line to High Line			±0.25	%
	Line Regulation - Duals				±1.0	%
	Load Regulation - Singles	Min. Load to Rated Load			±0.5	%
	Load Regulation - Duals				±2.0	%
	Ripple & Noise	BW = 5Hz to 20MHz		30	50	mVp-p
GENERAL	**GENERAL**					
	ISOLATION					
	Rated Voltage		1500			V_{DC}
	Test Voltage	60 Hz, 10 Seconds	1500			VPK
	Resistance			10		GΩ
	Capacitance			200		pF
	Leakage Current	V_{ISO} = 240VAC, 60Hz		15		µArms
	Switching Frequency			200		KHz
	MTTF per MIL-HDBK-217, Rev. F	Circuit Stress Method				
	Ground Benign	T_A = +25°C		1200		KHr
	Package Weight			15		g
	TEMPERATURE					
	Specification (Ambient)		-40		+71	°C
	Operation (Case)	Derate linearly from 71°C	-40		+100	°C
	Storage		-55		+125	°C

REMOTE ON/OFF CONTROL

Logic Compatibility ..... CMOS or Open Collector TTL
EC On ..... Open Circuit or > 3VDC
EC Off ..... < 1VDC
Shutdown Idle Current 1mA
Control Common ..... -Vin

ABSOLUTE MAXIMUM RATINGS

Output Short-Circuit Protection
(At T_A+25°C, nominal input voltage) ..... Continuous
Internal Power Dissipation 1.5W
Lead Temperature (Soldering, 10s Max) ..... +300°C
Max Case Temperature ..... +100°C

ORDERING INFORMATION

WP06R XXYZZ P/N R

Device Family
5-6W regulated DC/DC

Model Number
xx = Input Voltage
y = Number of Outputs (S=single; D=dual)
zz = Output Voltage

Ground Connection (Specify N=Neg. or P=Pos.)

Remote On/Off (Optional)

MECHANICAL

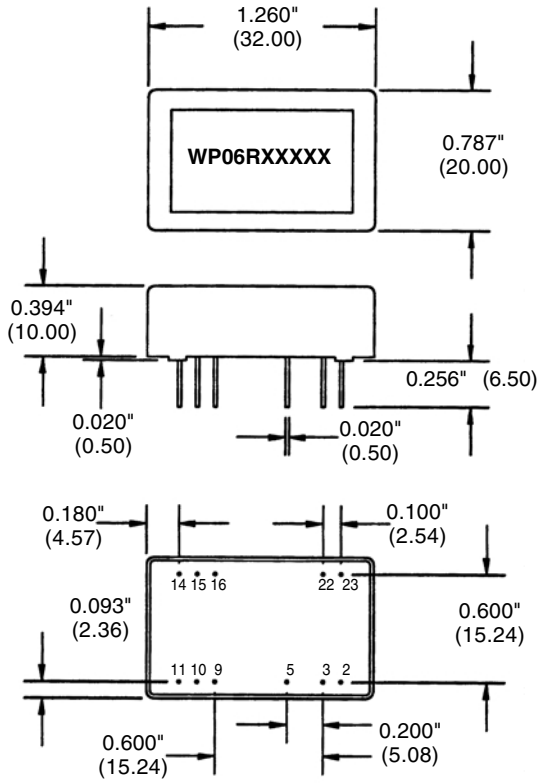

PIN CONNECTIONS		
	Pin Function	
Number	Singles	Duals
2	-Vin	-Vin
3	-Vin	-Vin
5	On/Off (Optional)	On/Off (Optional)
9	No Connection	Com
10	No Connection	No Connection
11	No Connection	-Vout
14	+Vout	+Vout
15	No Connection	No Connection
16	-Vout	Com
22	+Vin	+Vin
23	+Vin	+Vin

NOTES:
1) All dimensions in inches (mm)
2) Case is metal and lead material is brass with a solder plated surface to allow ease of solderability.

SIMPLIFIED CIRCUIT SCHEMATIC

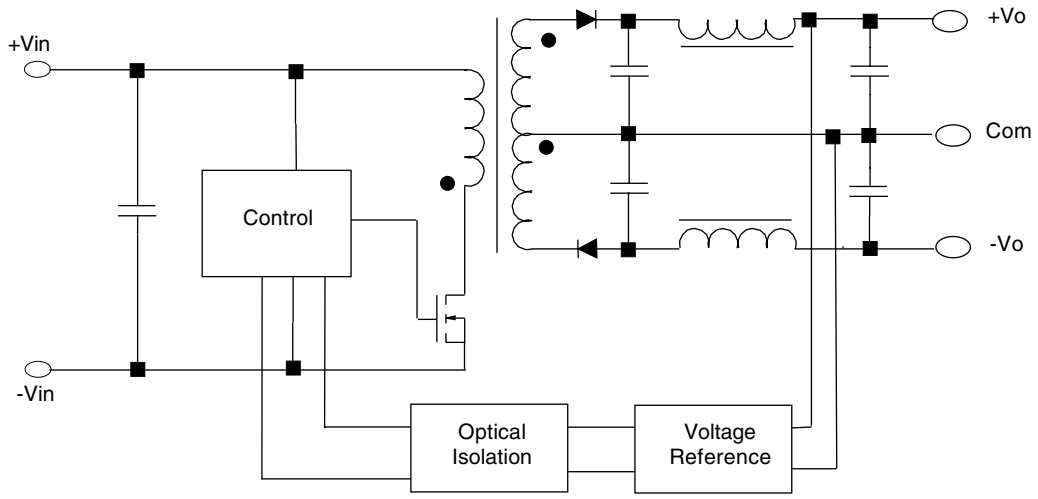

THERMAL DERATING CURVE

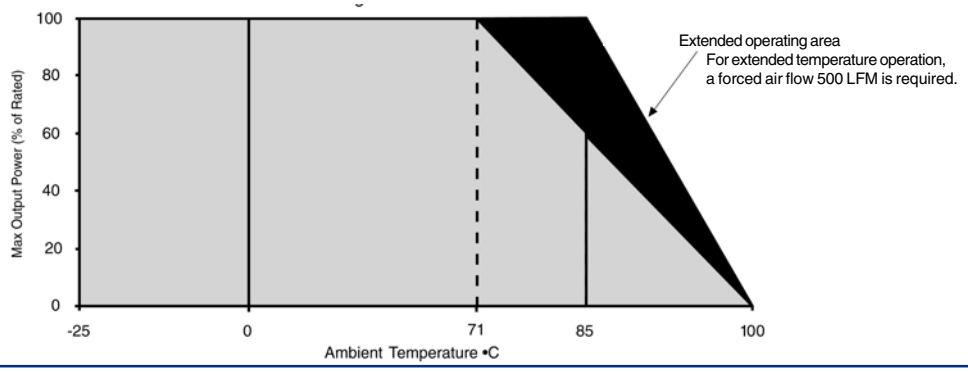

ENGINEERING NOTES

Power Electronics Division, United States
3400 E Britannia Drive, Tucson, Arizona 85706
Tel: 800.547.2537 Fax: 520.770.9369

C&D Technologies, (NCL)
Milton Keynes MK14 5BU UK
Tel: +44 (0)1908 615232 Fax: +44 (0)1908 617545

Any data, prices, descriptions or specifications presented herein are subject to revision by C&D Technologies, Inc. without notice. While such information is believed to be accurate as indicated herein, C&D Technologies, Inc. makes no warranty and hereby disclaims all warranties, express or implied, with regard to the accuracy or completeness of such information. Further, because the product(s) featured herein may be used under conditions beyond its control, C&D Technologies, Inc. hereby disclaims all warranties, either express or implied, concerning the fitness or suitability of such product(s) for any particular use or in any specific application or arising from any course of dealing or usage of trade. The user is solely responsible for determining the suitability of the product(s) featured herein for user's intended purpose and in user's specific application. C&D Technologies, Inc. does not warrant or recommend that any of its products be used in any life support or aviation or aerospace applications.