WNMD2166

Dual N-Channel, 20V, 4.0A, Power MOSFET

Http//:www.willsemi.com

V_{DS} (V)	Rds(on) (Ω)
20	0.022@ V_{GS}=4.5V
	0.023@ V_{GS}=3.7V
	0.024@ V_{GS}=3.1V
	0.027@ V_{GS}=2.5V

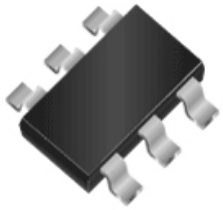

Package

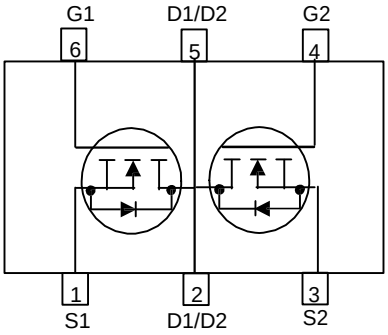

Pin configuration (Top view)

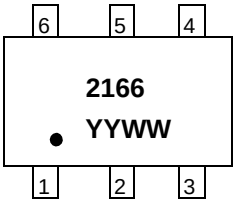

2166 = Device Code
YY = Year
WW = Week

Marking

Descriptions

The WNMD2166 is N-Channel enhancement MOS Field Effect Transistor. Uses advanced trench technology and design to provide excellent $R_{DS\ (ON)}$ with low gate charge. This device is suitable for use in DC-DC conversion, power switch and charging circuit. Standard Product WNMD2166 is Pb-free.

Features

- Trench Technology
- Supper high density cell design
- Excellent ON resistance for higher DC current
- Extremely Low Threshold Voltage
- Small package SOT-23-6L

Applications

- Driver for Relay, Solenoid, Motor, LED etc.
- DC-DC converter circuit
- Power Switch
- Load Switch
- Charging

Order information

Device	Package	Shipping
WNMD2166-6/TR	SOT-23-6L	3000/Reel&Tape

Absolute Maximum ratings

Parameter		Symbol	10 S	Steady State	Unit
Drain-Source Voltage		V_{DS}	+20		V
Gate-Source Voltage		V_{GS}	±10		
Continuous Drain Current [a]	T_A=25°C	I_D	5.0	4.0	A
	T_A=70°C		3.8	3.5	
Maximum Power Dissipation [a]	T_A=25°C	P_D	1.1	0.9	W
	T_A=70°C		0.7	0.6	
Continuous Drain Current [b]	T_A=25°C	I_D	4.0	3.5	A
	T_A=70°C		3.5	3.0	
Maximum Power Dissipation [b]	T_A=25°C	P_D	0.9	0.7	W
	T_A=70°C		0.55	0.45	
Pulsed Drain Current [c]		I_{DM}	25		A
Operating Junction Temperature		T_J	-55~+150		°C
Lead Temperature		T_L	260		°C
Storage Temperature Range		T_{stg}	-55~+150		°C

Thermal resistance ratings

Parameter		Symbol	Typical	Maximum	Unit
Junction-to-Ambient Thermal Resistance [a]	t ≤ 10 s	$R_{\theta JA}$	90	112	°C/W
	Steady State		115	132	
Junction-to-Ambient Thermal Resistance [b]	t ≤ 10 s	$R_{\theta JA}$	105	135	
	Steady State		138	162	
Junction-to-Case Thermal Resistance	Steady State	$R_{\theta JC}$	63	78	

a Surface mounted on FR-4 Board using 1 square inch pad size, 1oz copper

b Surface mounted on FR-4 board using minimum pad size, 1oz copper

c Pulse width<380μs, Duty Cycle<2%

d Maximum junction temperature T_J=150°C.

Electronics Characteristics (Ta=25°C, unless otherwise noted)

Parameter	Symbol	Test Conditions	Min	Typ	Max	Unit
OFF CHARACTERISTICS						
Drain-to-Source Breakdown Voltage	BV_{DSS}	V_{GS} = 0 V, I_D = 250uA	20			V
Zero Gate Voltage Drain Current	I_{DSS}	V_{DS} = 16V, V_{GS} = 0V			1	uA
Gate-to-source Leakage Current	I_{GSS}	V_{DS} = 0 V, V_{GS} = ±10 V			±100	nA
ON CHARACTERISTICS						
Gate Threshold Voltage	$V_{GS(TH)}$	V_{GS} = V_{DS}, I_D = 250uA	0.45	0.75	1.0	V
Drain-to-source On-resistance [b, c]	$R_{DS(on)}$	V_{GS} = 4.5V, I_D = 4.0A	15	22	27	mΩ
		V_{GS} = 3.7V, I_D = 4.0A	17	23	30	
		V_{GS} = 3.1V, I_D = 2.5A	18	24	35	
		V_{GS} = 2.5V, I_D = 2.0A	20	27	37	
Forward Trans conductance	g_{fs}	V_{DS} = 5.0V, I_D = 4.0 A		11		S
CAPACITANCES, CHARGES						
Input Capacitance	C_{ISS}	V_{GS} = 0 V,		680		pF
Output Capacitance	C_{OSS}	f = 1.0 MHz,		95		
Reverse Transfer Capacitance	C_{RSS}	V_{DS} = 10 V		89		
Total Gate Charge	$Q_{G(TOT)}$	V_{GS} = 4.5 V, V_{DS} = 10 V, I_D = 4.0A		10.8		nC
Threshold Gate Charge	$Q_{G(TH)}$			0.8		
Gate-to-Source Charge	Q_{GS}			2.3		
Gate-to-Drain Charge	Q_{GD}			2.5		
SWITCHING CHARACTERISTICS						
Turn-On Delay Time	td(ON)	V_{GS} = 4.5 V, V_{DS} = 10 V, I_D = 4.0 A, R_G=6 Ω		22		ns
Rise Time	tr			32		
Turn-Off Delay Time	td(OFF)			60		
Fall Time	tf			23		
BODY DIODE CHARACTERISTICS						
Forward Voltage	V_{SD}	V_{GS} = 0 V, I_S = 1.0A		0.78	1.50	V

Typical Characteristics (Ta=25°C, unless otherwise noted)

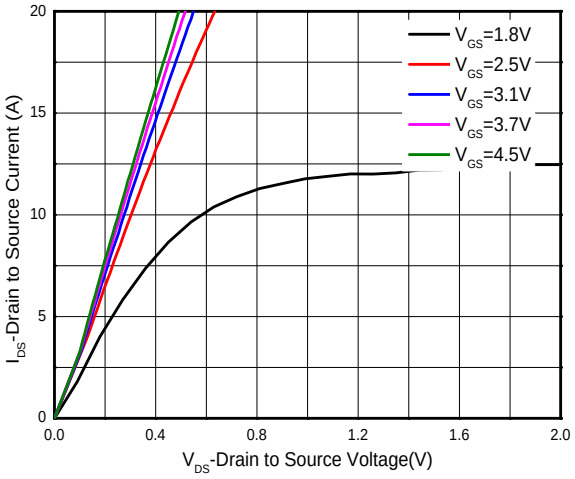

Output characteristics

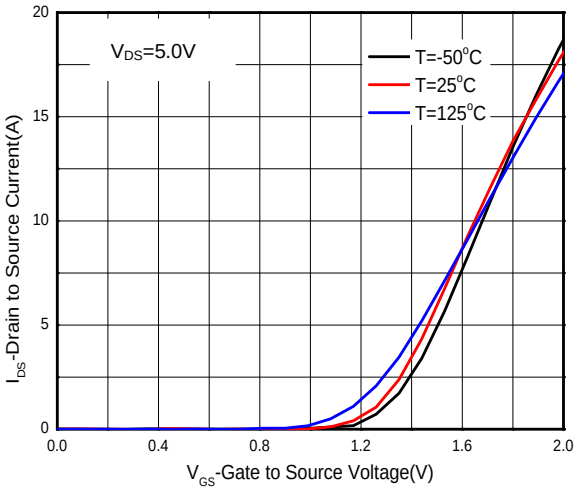

Transfer characteristics

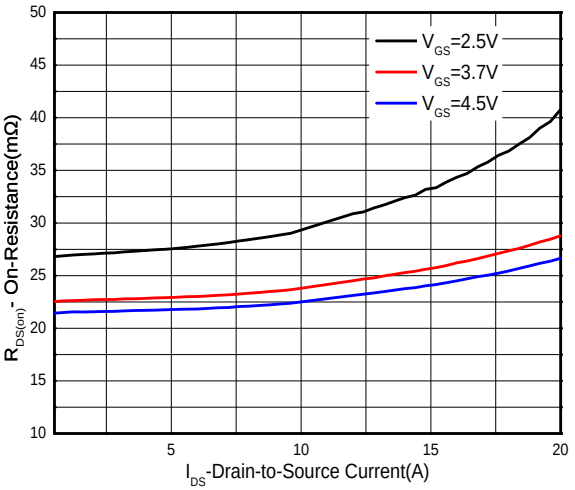

On-Resistance vs. Drain current

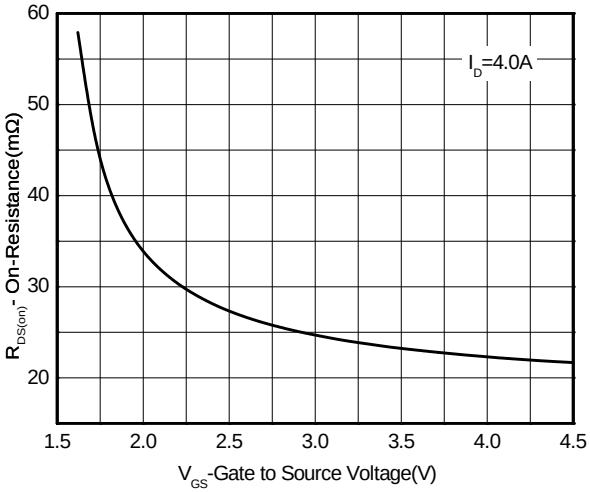

On-Resistance vs. Gate-to-Source voltage

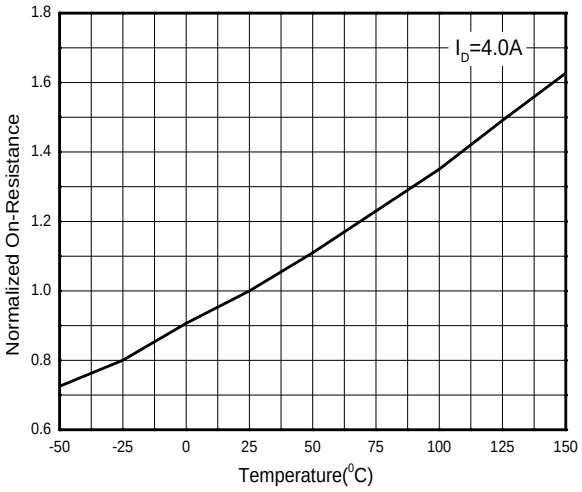

On-Resistance vs. Junction temperature

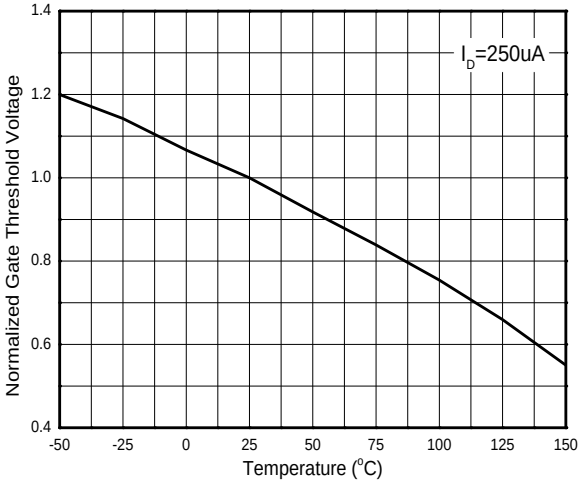

Threshold voltage vs. Temperature

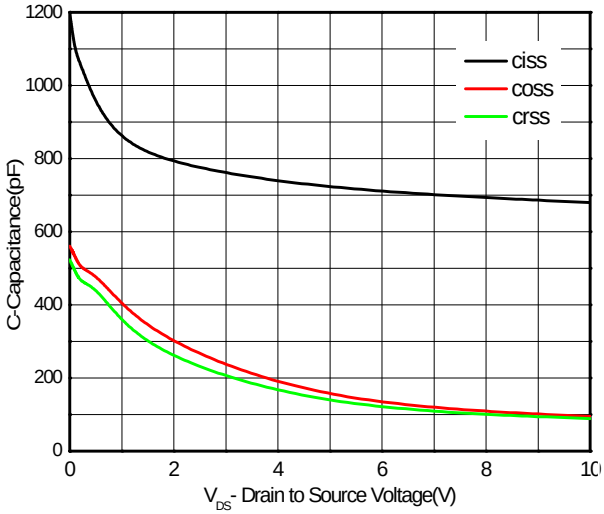

Capacitance

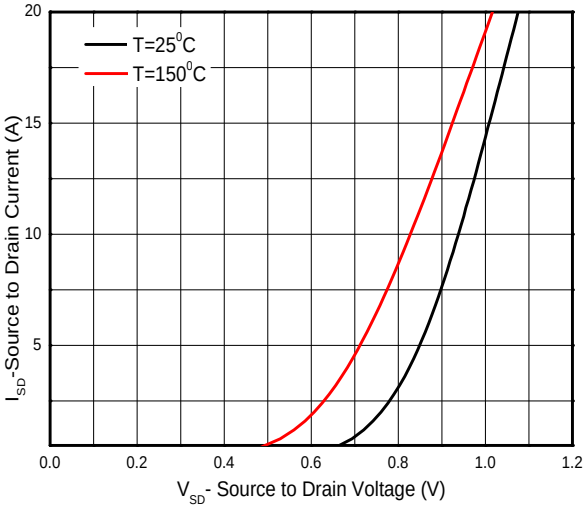

Body diode forward voltage

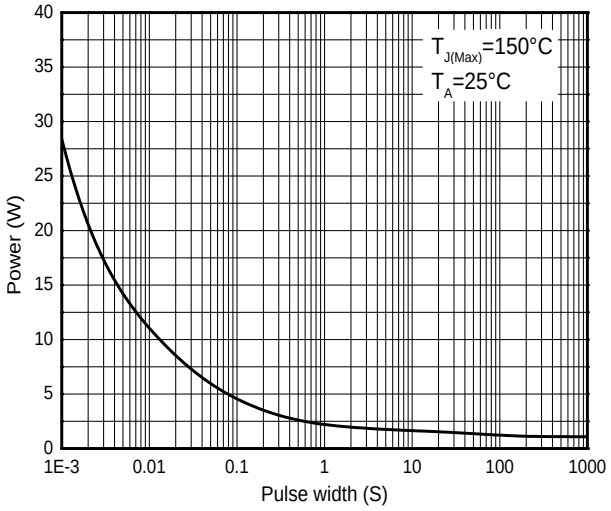

Single pulse power

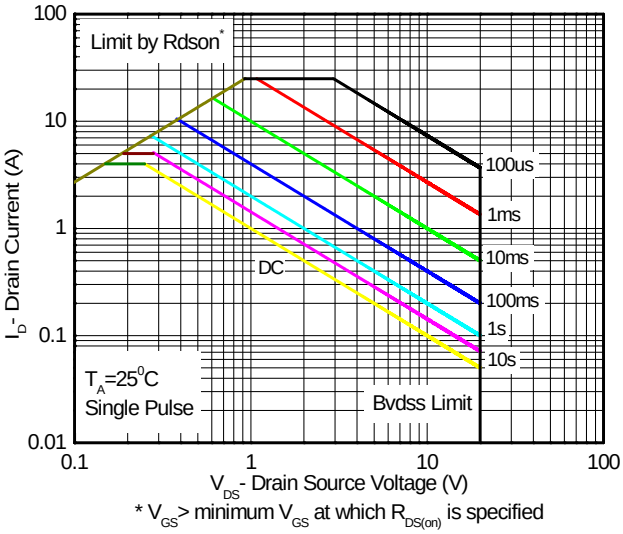

Safe operating power

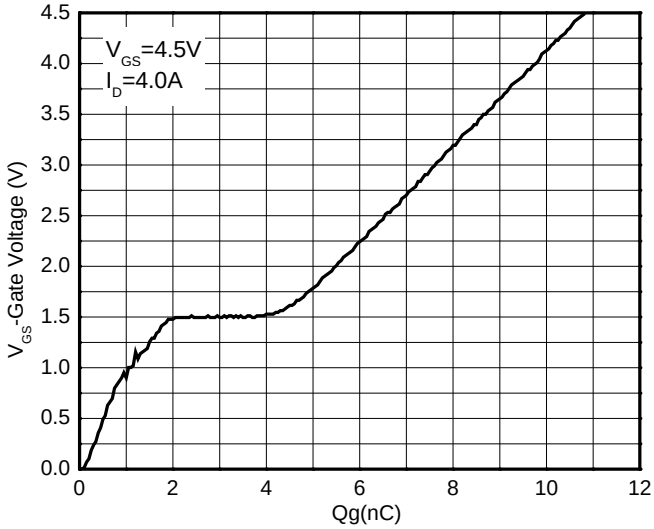

Gate charge Characteristics

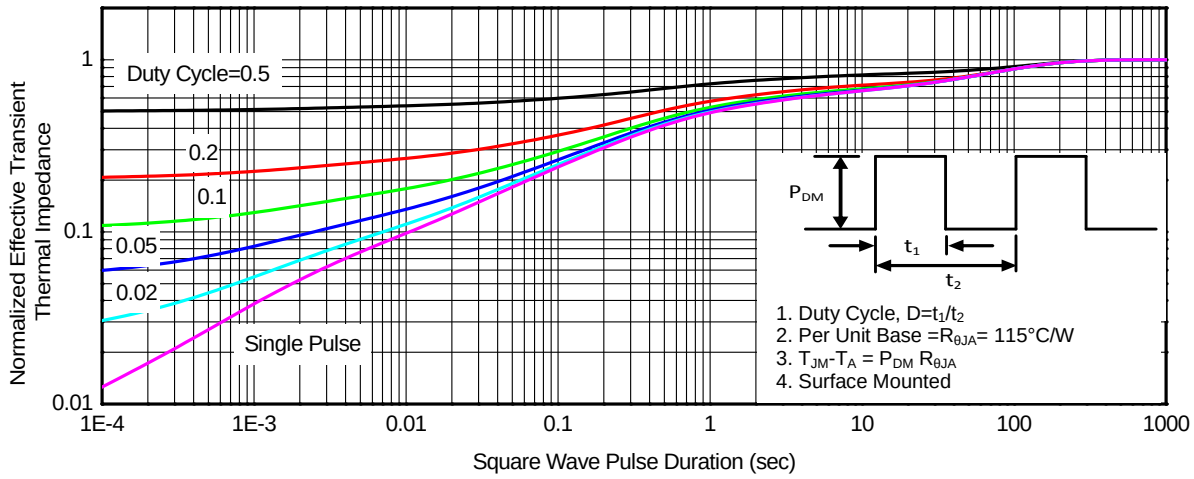

Transient thermal response (Junction-to-Ambient)

Package outline dimensions

SOT-23-6L

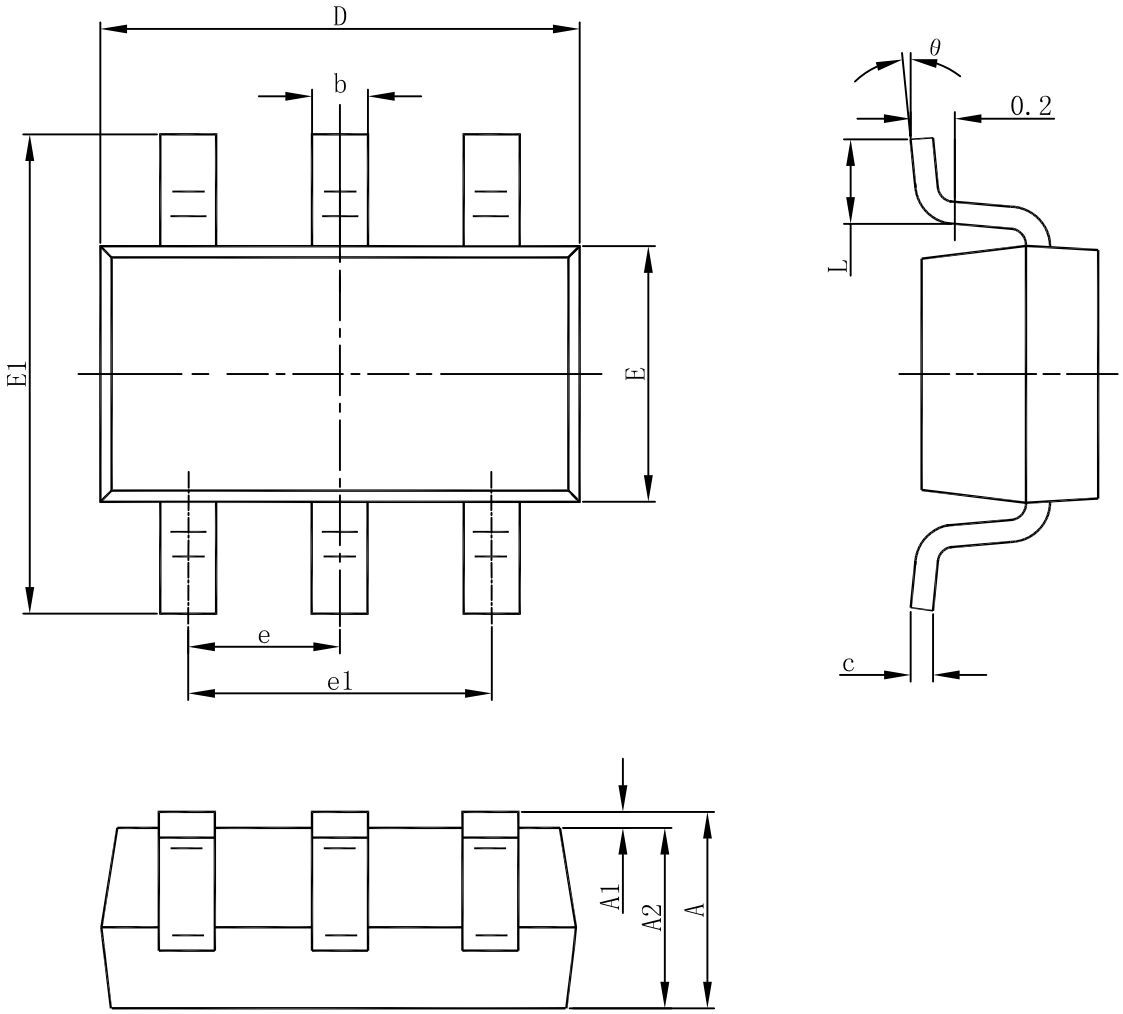

Symbol	Dimensions in Millimeters		
	Min.	Typ.	Max.
A	1.05	-	1.45
A1	0	-	0.15
A2	1.00	1.15	1.30
b	0.30	0.40	0.50
c	0.10	-	0.21
D	2.72	2.92	3.12
E1	2.60	2.80	3.00
E	1.40	1.60	1.80
e	0.85	0.95	1.05
e1	1.80	1.90	2.00
L	0.30	-	0.60
L1	0.25 BSC		
θ	0 °	-	8 °

TAPE AND REEL INFORMATION

Reel Dimensions

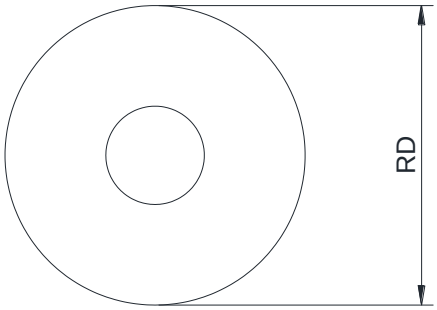

Tape Dimensions

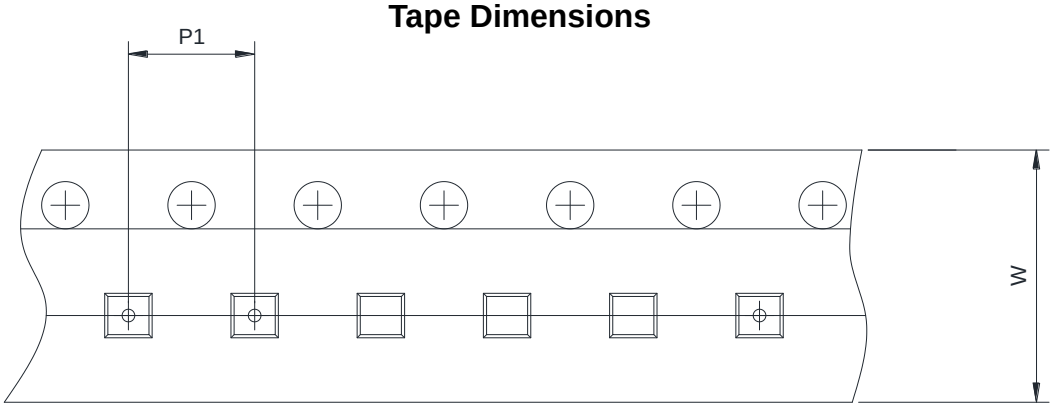

Quadrant Assignments For PIN1 Orientation In Tape

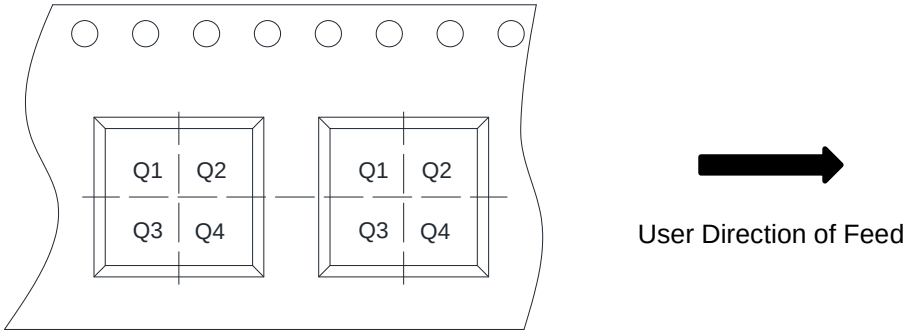

RD	Reel Dimension	☑ 7inch ☐ 13inch
W	Overall width of the carrier tape	☑ 8mm ☐ 12mm ☐ 16mm
P1	Pitch between successive cavity centers	☐ 2mm ☑ 4mm ☐ 8mm
Pin1	Pin1 Quadrant	☐ Q1 ☐ Q2 ☑ Q3 ☐ Q4