Power Systems

AC-DC WALL / DESKTOP

WN 05B (5 Watt Wall Mount AC Adapter) (PRELIMINARY INFORMATION)

Features

Two pin wall mount type input plug
Wide range AC input
Level B EMI filter
Fully enclosed plastic case
Fully regulated output
High efficiency
High Quality
Different outputs plugs available



Electrical specifications

Input

Voltage ..... 90 - 264 VAC
Current ..... 0.4 Arms Max.
Frequency ..... 47 - 63 Hz

Out put

Voltage (Vo) ..... (see table)
Tolerance 5%
Power (Po) ..... 5 Watt Max.
Hold up time ..... 8ms min. at full load, 115 VAC
Overvoltage protection ... Build-in
Overcurrent protection ... 150% of full load
Short circuit protection ... Pulsing mode, auto recovery
Efficiency ..... 70% typ. at full load and 115 VAC
Ripple/Noise(Vp-p) ..... 1% (20MHz bandwidth)

Environmental

Operating temperature

0 deg. C to +40 deg. C ambient

Storage temperature

-20 deg. C to +80 deg. C ambient

EMI

Meet FCC class B, VCCI class B,
CISPR 22 class B

Safety

CE
TUV

Output Electronic Specifications

Model No.	Po	Vo	Io max
WN05-050B	5W	5.0V	1.0A
WN05-090B	5W	9.0V	0.56A
WN05-120B	5W	12.0V	0.42A

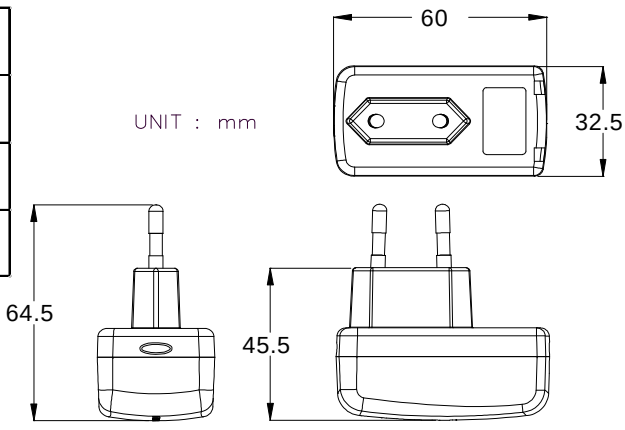

Power Systems – The Power Solution

Web: www.Power-Systems.de
Email: Info@Power-Systems.de

Address: Dörnet 8 ; 74360 Ilsfeld-Auenstein / Germany
Tel. : + 49 / 70 62 / 67 59 - 6
Fax: + 49 / 70 62 / 67 59 - 80