Receptacles

Features:

- DIN Rail, Panel Mount or Wall Mount
- Rating: 15A/125V AC
- Finger Protection: IP54
- Available in 3 colors.

	PANEL MOUNT	WALL MOUNT	DIN RAIL MOUNT
			
External Dimension (HxWxL mm)	36.5 x 61.5 x 50	50 x 71 x 53.5	58.5 x 84 x 53.5
Stripping Length	10 mm	10 mm	10 mm
Insulation Material	Thermoplastic	Thermoplastic	Thermoplastic
Type of Connection	3 screw clamps	3 screw clamps	3 screw clamps
Approvals*	c UL us E154664	c UL us E154664	c UL us E154664
Voltage Rating	125 V	125 V	125 V
Current Rating	15 A	15 A	15 A

	Cat. No.	Std. Pk.	Cat. No.	Std. Pk.	Cat. No.	Std. Pk.
Complete Kit:						
Blue	PMRBU	1	WMRBU	1	DMRBU	1
Gray	PMRGR	1	WMRGR	1	DMRGR	1
Black	PMRBA	1	WMRBA	1	DMRBA	1
Optional Accessory Sealing Gasket for Panel Mount Receptacles	SEALGASK	1	Includes Sealing Gasket		Includes Sealing Gasket	

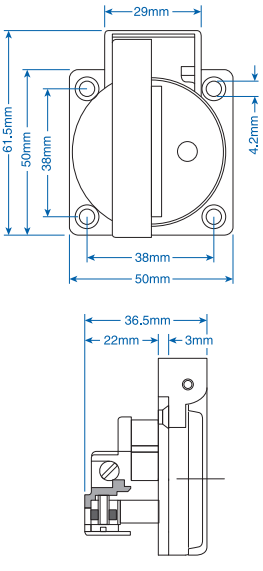

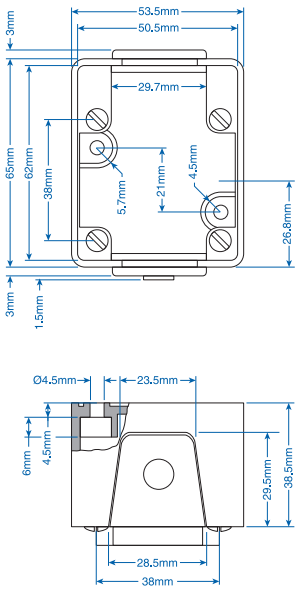

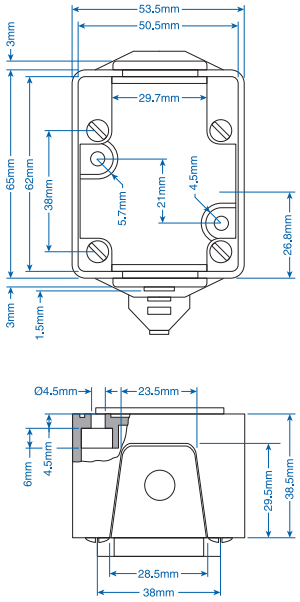

*UL approval applies to outlet only, not enclosure or DIN rail clip.

PANEL MOUNT

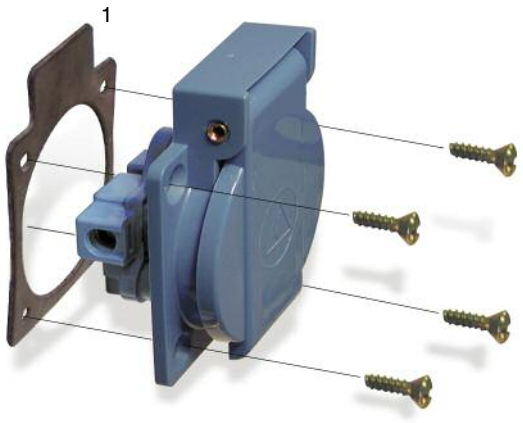

Wiring of Receptacles

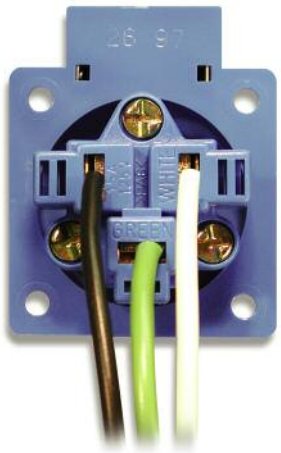

WALL MOUNT

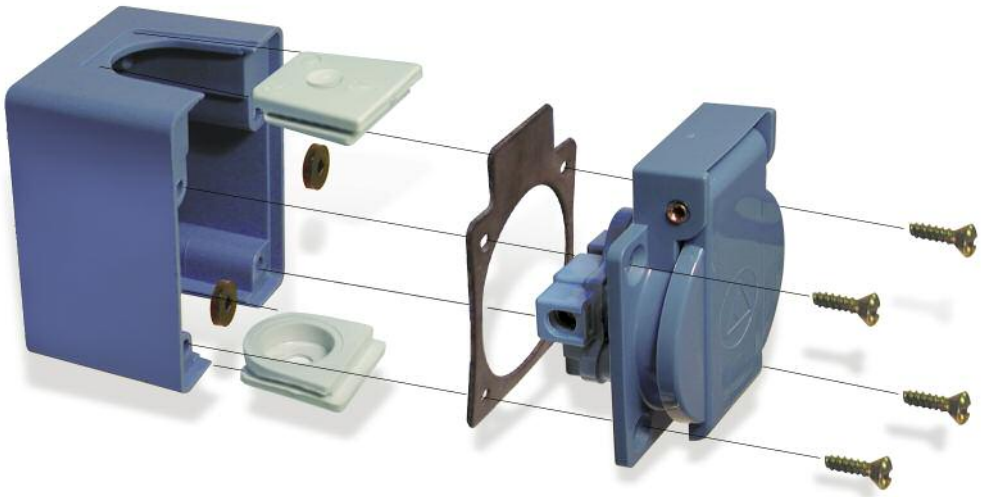

DIN RAIL MOUNT

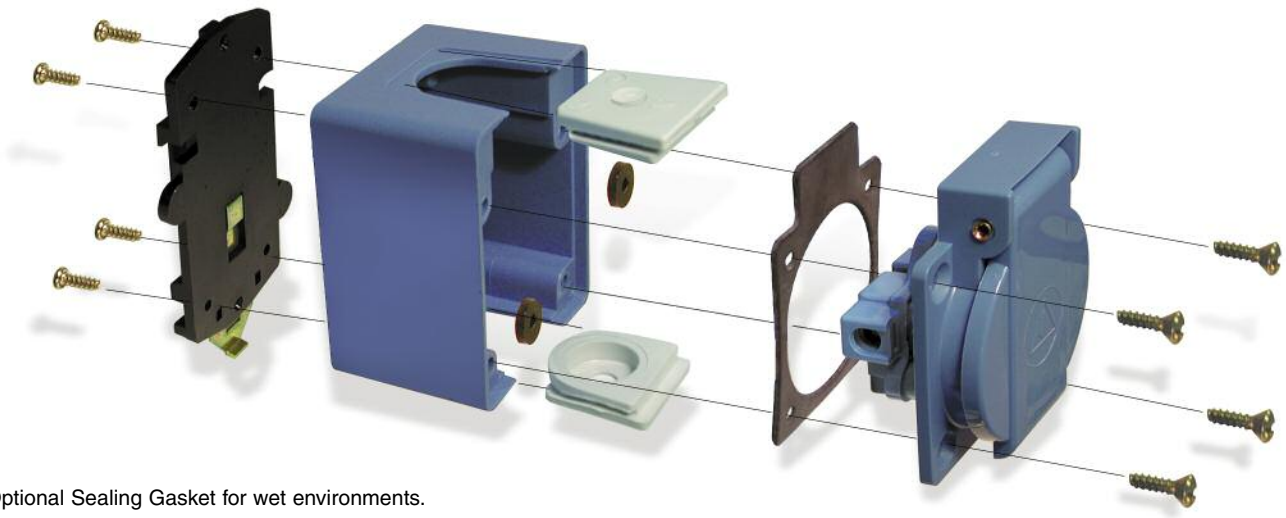

[1] Optional Sealing Gasket for wet environments.