WM8785

24-Bit, 192kHz Stereo ADC

DESCRIPTION

The WM8785 is a stereo audio ADC with differential inputs designed for high performance recordable media applications. Data is provided as a PCM output.

Stereo 24-bit multi-bit sigma-delta ADCs are used with digital audio output word lengths of 16 to 32 bits, and sampling rates from 8kHz to 192kHz. The device has a selectable high pass filter to remove residual DC offsets. The device also supports a TDM bus for data out.

The device is controlled via a 2 or 3 wire serial interface. The interface provides access to all features including oversampling rate, audio format, powerdown, master/slave control and digital signal manipulation. The device is supplied in a 20-lead SSOP package.

FEATURES

- SNR 111dB ('A' weighted @ 48kHz)
- THD -102dB (at -0.1dB)
- Sampling Frequency: 8 – 192kHz
- 2 or 3 Wire Microprocessor Control Interface
- Master or Slave Clocking Mode
- Programmable Audio Data Interface Modes
  - I^2S, Left, Right Justified or DSP
  - 16/20/24/32 bit Word Lengths
- A TDM bus is supported for data out
- Supply Voltages
  - Analogue 4.5 to 5.5V
  - Digital core: 2.7V to 3.6V
- 20-lead SSOP package

APPLICATIONS

- Recordable DVD Players
- Personal Video Recorders
- High End Sound Cards
- Studio Audio Processing Equipment

BLOCK DIAGRAM

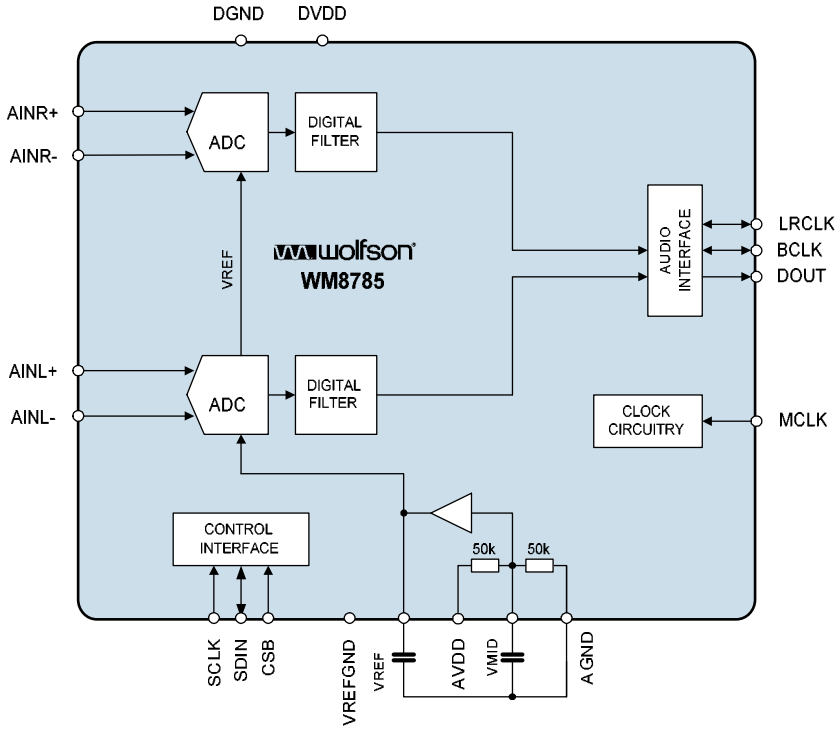

To receive regular email updates, sign up at http://www.wolfsonmicro.com/enews/

Copyright ©2005 Wolfson Microelectronics plc

TABLE OF CONTENTS

DESCRIPTION 1
FEATURES 1
APPLICATIONS 1
BLOCK DIAGRAM 1
TABLE OF CONTENTS 2
PIN CONFIGURATION 3
ORDERING INFORMATION 3
PIN DESCRIPTION 4
ABSOLUTE MAXIMUM RATINGS 5
RECOMMENDED OPERATING CONDITIONS 5
ELECTRICAL CHARACTERISTICS 6
TERMINOLOGY 7
SIGNAL TIMING REQUIREMENTS 8
SYSTEM CLOCK TIMING 8
AUDIO INTERFACE TIMING – MASTER MODE, PCM DATA 8
AUDIO INTERFACE TIMING – SLAVE MODE, PCM DATA 9
CONTROL INTERFACE TIMING – 3-WIRE MODE 9
CONTROL INTERFACE TIMING – 2-WIRE MODE 10
POWER-ON RESET 11
DIGITAL FILTER CHARACTERISTICS 12
TERMINOLOGY 12
FILTER RESPONSES 13
DEVICE DESCRIPTION 16
INTRODUCTION 16
DIGITAL AUDIO INTERFACE 16
DIGITAL HIGH PASS 20
DATA OUT PIN DISABLE 21
CONTROL INTERFACE 21
TIME DIVISION MULTIPLEXED DATA OUT 22
TDM SELECTION 23
OVERSAMPLING RATIOS AND SIGMA-DELTA MODULATOR FREQUENCY 26
MASTER CLOCK AND AUDIO SAMPLE RATES 26
MLCK AND LRCLK PHASE RELATIONSHIP 27
POWER DOWN CONTROL 27
REGISTER MAP 28
APPLICATIONS INFORMATION 29
RECOMMENDED EXTERNAL COMPONENTS 29
PACKAGE DIMENSIONS 30
IMPORTANT NOTICE 31
ADDRESS: 31

PIN CONFIGURATION

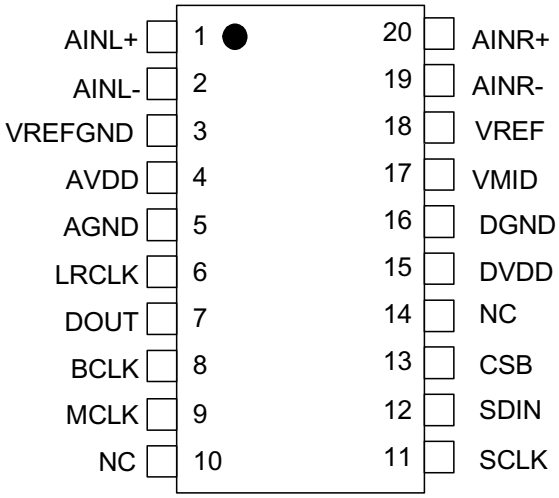

ORDERING INFORMATION

ORDER CODE	TEMPERATURE RANGE	PACKAGE	MOISTURE SENSITIVITY LEVEL	PEAK SOLDERING TEMPERATURE
WM8785GEDS/V	-25°C to +85°C	20-lead SSOP (Pb-free)	MSL3	260°C
WM8785GEDS/RV	-25°C to +85°C	20-lead SSOP (Pb-free, tape and reel)	MSL3	260°C

Note:

Reel quantity = 2,000

PIN DESCRIPTION

PIN	NAME	TYPE	DESCRIPTION
1	AINL+	Analogue Input	Left Channel Positive Input
2	AINL-	Analogue Input	Left Channel Negative Input
3	VREFGND	Analogue Reference	Negative Reference Connection
4	AVDD	Supply	Analogue Supply
5	AGND	Supply	Analogue Ground (return path for AVDD)
6	LRCLK	Digital Input / Output	Audio Interface Left / Right Clock
7	DOUT	Digital Output	ADC Digital Audio Data
8	BCLK	Digital Input / Output	Audio Interface Bit Clock
9	MCLK	Digital Input	Master Clock
10	NC	NC	No Connection
11	SCLK	Digital Input	Control Interface Clock Input / 2 wire output
12	SDIN	Digital Input / Output	Control Interface Data Input
13	CSB	Digital Input	Chip Select / Control Interface Format Selection / 3 wire address select
14	NC	NC	No connection
15	DVDD	Supply	Digital Supply
16	DGND	Supply	Digital Ground (return path for DVDD)
17	VMID	Analogue Output	Midrail Voltage Decoupling Capacitor
18	VREF	Analogue Reference	Reference Voltage Decoupling Capacitor
19	AINR-	Analogue Input	Right Channel Negative Input
20	AINR+	Analogue Input	Right Channel Positive Input

ABSOLUTE MAXIMUM RATINGS

Absolute Maximum Ratings are stress ratings only. Permanent damage to the device may be caused by continuously operating at or beyond these limits. Device functional operating limits and guaranteed performance specifications are given under Electrical Characteristics at the test conditions specified.



ESD Sensitive Device. This device is manufactured on a CMOS process. It is therefore generically susceptible to damage from excessive static voltages. Proper ESD precautions must be taken during handling and storage of this device.

Wolfson tests its package types according to IPC/JEDEC J-STD-020B for Moisture Sensitivity to determine acceptable storage conditions prior to surface mount assembly. These levels are:

MSL1 = unlimited floor life at <30°C / 85% Relative Humidity. Not normally stored in moisture barrier bag.
MSL2 = out of bag storage for 1 year at <30°C / 60% Relative Humidity. Supplied in moisture barrier bag.
MSL3 = out of bag storage for 168 hours at <30°C / 60% Relative Humidity. Supplied in moisture barrier bag.

The Moisture Sensitivity Level for each package type is specified in Ordering Information.

CONDITION	MIN	MAX
Digital supply voltage	-0.3V	+3.63V
Analogue supply voltage	-0.3V	+7V
Voltage range digital inputs	DGND -0.3V	DVDD + 0.3V
Voltage range analogue inputs	AGND -0.3V	AVDD +0.3V
Master Clock Frequency		40MHz
Operating temperature range, T_A	-25°C	+85°C
Storage temperature after soldering	-65°C	+150°C

Note: Analogue and digital grounds must always be within 0.3V of each other.

RECOMMENDED OPERATING CONDITIONS

PARAMETER	SYMBOL	TEST CONDITIONS	MIN	TYP	MAX	UNIT
Digital supply range	DVDD		2.7		3.6	V
Analogue supply range	AVDD		4.5		5.5	V
Ground	DGND,AGND			0		V

ELECTRICAL CHARACTERISTICS

Test Conditions

DVDD = 3.3V, AVDD = 5.0V, T_A = +25°C, 1kHz signal, A-weighted, fs = 48kHz, MCLK = 256fs, 24-bit audio data, Slave Mode unless otherwise stated.

PARAMETER	SYMBOL	TEST CONDITIONS	MIN	TYP	MAX	UNIT
ADC Performance						
Full Scale Input Signal Level (for ADC 0dB Input)				2.0		V_{rms}
Input resistance				10		kΩ
Input capacitance				10		pF
Signal to Noise Ratio (Note 1,2,4)	SNR	A-weighted, @ fs = 48kHz	104	111		dB
		Unweighted, @ fs = 48kHz		108		dB
Signal to Noise Ratio (Note 1,2,4)	SNR	A-weighted, @ fs = 96kHz		111		dB
		Unweighted, @ fs = 96kHz		108		dB
Signal to Noise Ratio (Note 1,2,4)	SNR	A-weighted, @ fs = 192kHz		111		dB
		Unweighted, @ fs = 192kHz		108		dB
Total Harmonic Distortion	THD	1kHz, -0.1dB Full Scale @ fs = 48kHz		-102		dB
		1kHz, -0.1dB Full Scale @ fs = 96kHz		-102		dB
		1kHz, -0.1dB Full Scale @ fs = 192kHz		-102		dB
Total Harmonic Distortion	THD	1kHz, -0.1dB Full Scale @ fs = 48kHz		0.0008		%
		1kHz, -0.1dB Full Scale @ fs = 96kHz		0.0008		%
		1kHz, -0.1dB Full Scale @ fs = 192kHz		0.0008		%
Dynamic Range	DNR	-60dBFS	104	111		dB
Channel Level Matching		20kHz signal		0.1		dB
Power Supply Rejection Ratio	PSRR	1kHz 100mVpp, applied to AVDD, DVDD		50		dB
		20Hz to 20kHz 100mVpp		45		dB
Digital Logic Levels (CMOS Levels)						
Input LOW level	V_{IL}				0.3 x DVDD	V
Input HIGH level	V_{IH}		0.7 x DVDD			V
Input leakage current			-1	±0.2	+1	µA
Input capacitance				5		pF
Output LOW	V_{OL}	I_{OL}=1mA			0.1 x DVDD	V
Output HIGH	V_{OH}	I_{OH}= -1mA	0.9 x DVDD			V
Analogue Reference Levels						
Midrail Reference Voltage	VMID	AVDD to VMID and VMID to VREFGND	–3%	AVDD/2	+3%	V
Potential Divider Resistance	R_{VMID}	AVDD to VMID and VMID to GND		50		kΩ
Buffered Reference Voltage	VREF		–3%	0.8 x AVDD	+3%	V

Test Conditions

DVDD = 3.3V, AVDD = 5.0V, T_A = +25°C, 1kHz signal, A-weighted, fs = 48kHz, MCLK = 256fs, 24-bit audio data, Slave Mode unless otherwise stated.

PARAMETER	SYMBOL	TEST CONDITIONS	MIN	TYP	MAX	UNIT
Supply Current						
Analogue supply current				27		mA
Digital supply current				5		mA
Power Down				22		uA

Note:

1. VMID is decoupled with 10uF and 0.1uF capacitors close to the device package. Smaller capacitors may reduce performance.

TERMINOLOGY

1. Signal-to-noise ratio (dB) – Ratio of output level with 1kHz full scale input, to the output level with all zeros into the digital input, over a 20Hz to 20kHz bandwidth. (No Auto-zero or Automute function is employed in achieving these results).
2. Dynamic range (dB) - DR is a measure of the difference between the highest and lowest portions of a signal. Normally a THD+N measurement at 60dB below full scale. The measured signal is then corrected by adding the 60dB to it. (e.g. THD+N @ -60dB= -32dB, DR= 92dB).
3. THD+N (dB) - THD+N is a ratio, of the rms values, of (Noise + Distortion)/Signal.
4. Channel Separation (dB) - Also known as Cross-Talk. This is a measure of the amount one channel is isolated from the other. Normally measured by sending a full scale signal down one channel and measuring the other.
5. All performance measurements are done with a 20kHz low pass filter, and where noted an A-weight filter, except where noted. Failure to use such a filter will result in higher THD+N and lower SNR and Dynamic Range readings than are found in the Electrical Characteristics. The low pass filter removes out of band noise; although this is not audible, it may affect dynamic specification values

SIGNAL TIMING REQUIREMENTS

SYSTEM CLOCK TIMING

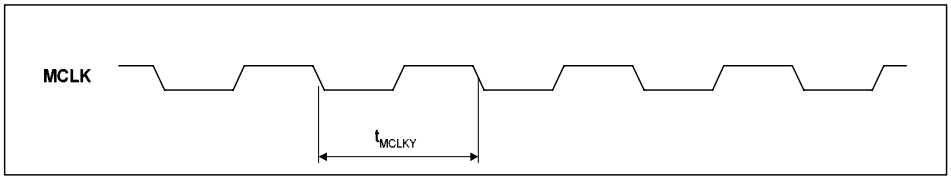

Figure 1 System Clock Timing Requirements

Test Conditions

DVDD = 3.3V, DGND = 0V, T_A = +25°C, Slave Mode, fs = 48kHz, MCLK = 256fs, 24-bit data, unless otherwise stated.

PARAMETER	SYMBOL	MIN	TYP	MAX	UNIT
System Clock Timing Information					
MCLK System clock cycle time	T_{MCLKY}	25			ns
MCLK duty cycle	T_{MCLKDS}	60:40		40:60	

AUDIO INTERFACE TIMING – MASTER MODE, PCM DATA

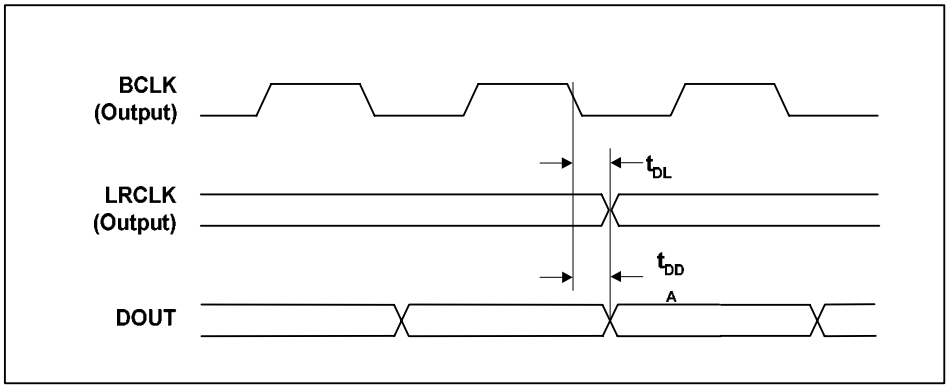

Figure 2 Digital Audio Data Timing – Master Mode (see Control Interface)

Test Conditions

DVDD = 3.3V, DGND = 0V, T_A = +25°C, Master Mode, fs = 48kHz, MCLK = 256fs, 24-bit data, unless otherwise stated.

PARAMETER	SYMBOL	MIN	TYP	MAX	UNIT
Audio Data Input Timing Information					
LRCLK propagation delay from BCLK falling edge	t_{DL}	0		10	ns
DOUT propagation delay from BCLK falling edge	t_{DDA}	0		11	ns

AUDIO INTERFACE TIMING – SLAVE MODE, PCM DATA

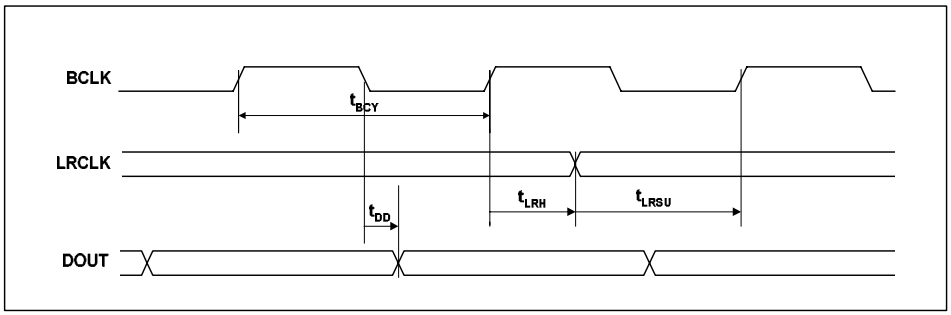

Figure 3 Digital Audio Data Timing – Slave Mode

Test Conditions

DVDD = 3.3V, DGND = 0V, T_A = +25°C, Slave Mode, fs = 48kHz, MCLK = 256fs, 24-bit data, unless otherwise stated.

PARAMETER	SYMBOL	MIN	TYP	MAX	UNIT
Audio Data Input Timing Information					
BCLK cycle time	t_{BCY}	25			ns
LRCLK set-up time to BCLK rising edge	t_{LRSU}	10			ns
LRCLK hold time from BCLK rising edge	t_{LRH}	10			ns
DOUT propagation delay from BCLK falling edge	t_{DD}	0		11	ns

CONTROL INTERFACE TIMING – 3-WIRE MODE

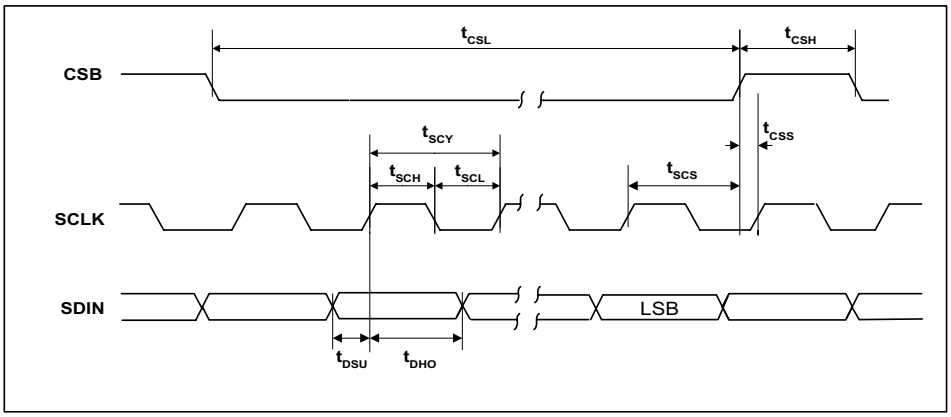

Figure 4 Control Interface Timing – 3-Wire Serial Control Mode

Test Conditions

DVDD = 3.3V, DVDD = 3.3V, DGND = 0V, T_A = +25°C, Slave Mode, fs = 48kHz, MCLK = 256fs, 24-bit data, unless otherwise stated.

PARAMETER	SYMBOL	MIN	TYP	MAX	UNIT
Program Register Input Information					
SCLK rising edge to CSB rising edge	t_{SCS}	80			ns
SCLK pulse cycle time	t_{SCY}	200			ns
SCLK pulse width low	t_{SCL}	80			ns
SCLK pulse width high	t_{SCH}	80			ns
SDIN to SCLK set-up time	t_{DSU}	40			ns
SCLK to SDIN hold time	t_{DHO}	40			ns
CSB pulse width low	t_{CSL}	40			ns
CSB pulse width high	t_{CSH}	40			ns
CSB rising to SCLK rising	t_{CSS}	40			ns
Pulse width of spikes that will be suppressed	t_{ps}	4		6	ns

CONTROL INTERFACE TIMING – 2-WIRE MODE

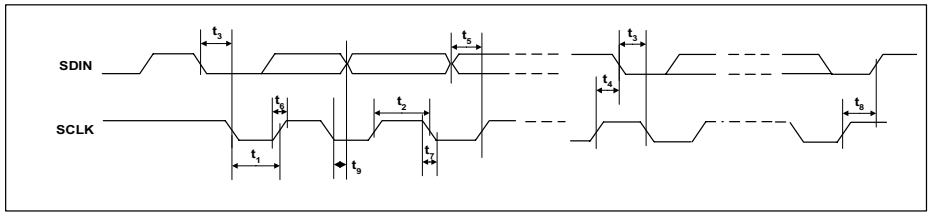

Figure 5 Control Interface Timing – 2-Wire Serial Control Mode

Test Conditions

DVDD = 3.3V, DVDD = 3.3V, DGND = 0V, T_A = +25°C, Slave Mode, fs = 48kHz, MCLK = 256fs, 24-bit data, unless otherwise stated.

PARAMETER	SYMBOL	MIN	TYP	MAX	UNIT
Program Register Input Information					
SCLK Frequency		0		5	MHz
SCLK Low Pulse-Width	t_1	80			ns
SCLK High Pulse-Width	t_2	80			us
Hold Time (Start Condition)	t_3	600			ns
Setup Time (Start Condition)	t_4	600			ns
Data Setup Time	t_5	100			ns
SDIN, SCLK Rise Time	t_6			300	ns
SDIN, SCLK Fall Time	t_7			300	ns
Setup Time (Stop Condition)	t_8	600			ns
Data Hold Time	t_9			900	ns
Pulse width of spikes that will be suppressed	t_{ps}	4		6	ns

POWER-ON RESET

The WM8785 has an internal power-on reset circuit. The reset sequence is entered at power-on or power-up (DVDD). Until the internal reset is removed, DOUT is forced to zero. DOUT remains zero for a count equal to 32 sample clocks, after power up. (This count is driven by MCLK and is independent of any external LRCLK).

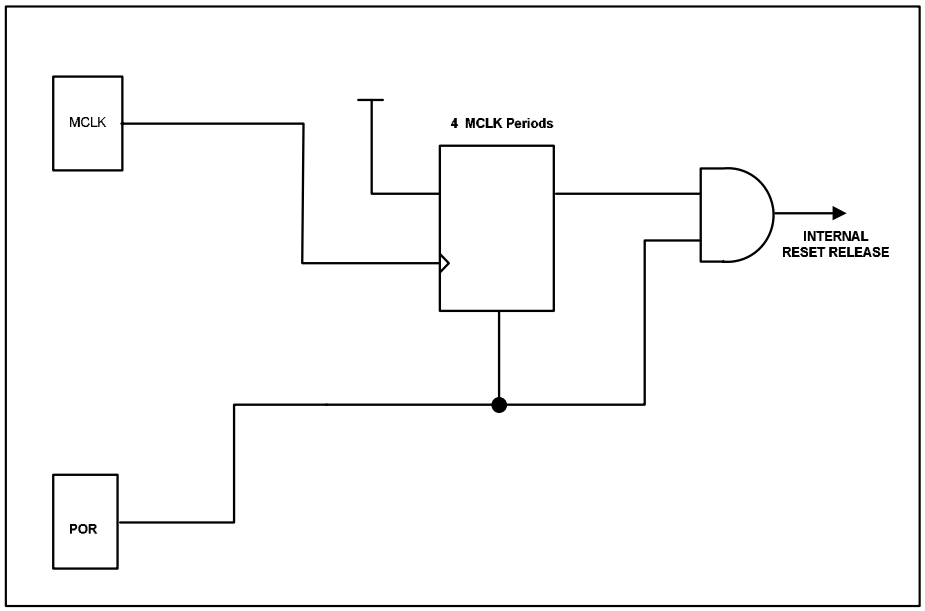

Figure 6 POR Circuit

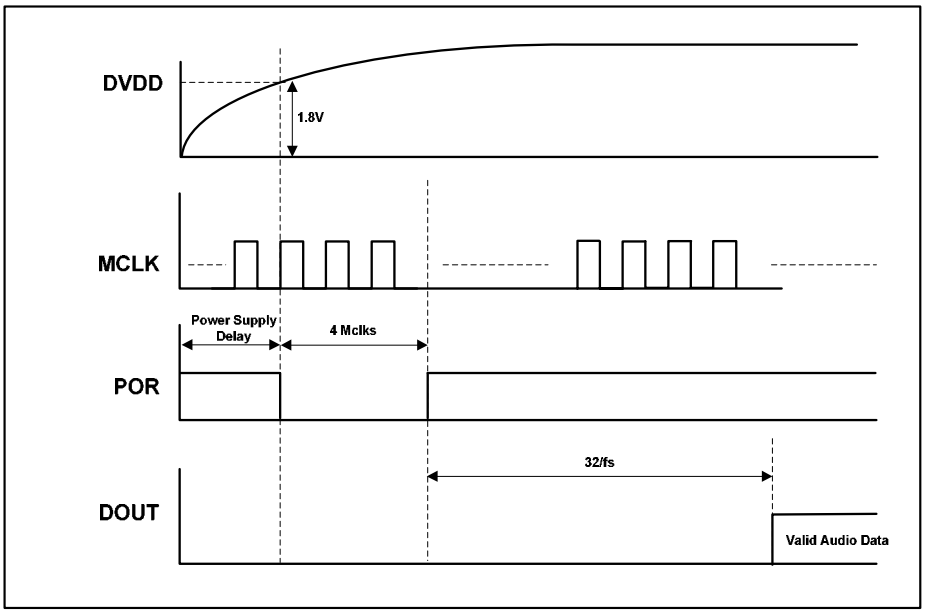

Figure 7 POR Timing

DIGITAL FILTER CHARACTERISTICS

The WM8785 digital filter characteristics scale with sample rate.

PARAMETER	TEST CONDITIONS	MIN	TYP	MAX	UNIT
ADC Sample Rate (Single Rate – 48KHz typically)					
Passband	+/- 0.005dB	0		0.454fs	
	-6dB		0.5fs		
Passband Ripple				+/- 0.005	dB
Stopband		0.546fs			
Stopband Attenuation	f > 0.546fs	-85			dB
Group Delay			32/fs		s
ADC Sample Rate (Dual Rate - 96kHz typically)					
Passband	+/- 0.005dB	0		0.454fs	
	-6dB		0.5fs		
Passband Ripple				+/- 0.005	dB
Stopband		0.546fs			
Stopband Attenuation	f > 0.546fs	-85			dB
Group Delay			32/fs		s
ADC Sample Rate (Quad Rate - 192kHz typically)					
Passband	+/- 0.005dB	0		0.25fs	
	-3dB		0.45fs		
	-6dB		0.5fs		
Passband Ripple				+/- 0.005	dB
Stopband		0.75fs			
Stopband Attenuation	f > 0.75fs	-85			dB
Group Delay			10/fs		s
High Pass Filter Corner Frequency	-3dB		3.7		Hz
	-0.5dB		10.4		
	-0.1dB		21.6		

TERMINOLOGY

1. Stop Band Attenuation (dB) - the degree to which the frequency spectrum is attenuated (outside audio band)
2. Pass-band Ripple – any variation of the frequency response in the pass-band region

FILTER RESPONSES

SINGLE RATE 48k

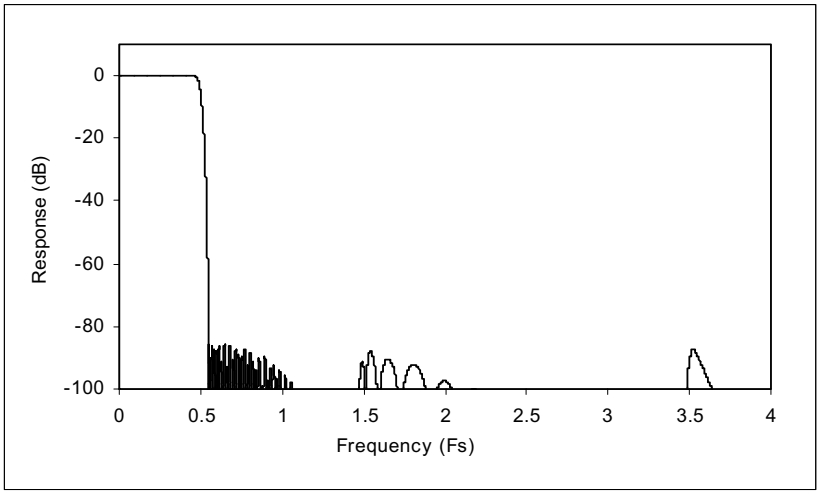

Figure 8 Single Rate 48k Filter Response

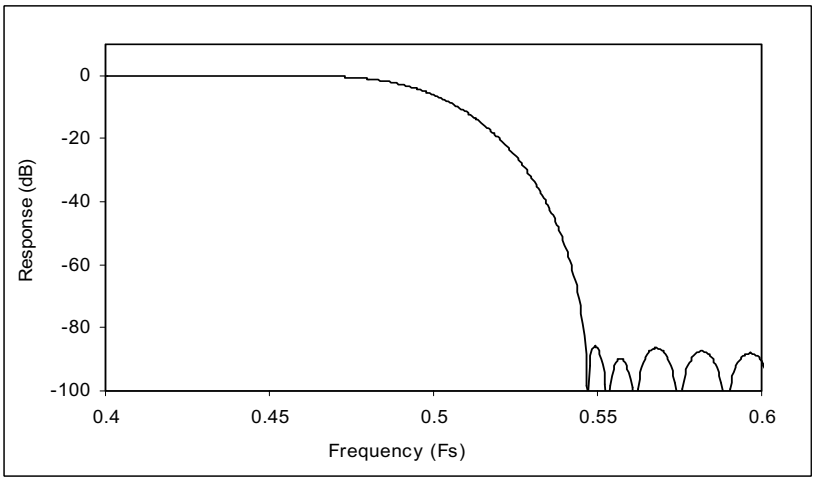

Figure 9 Single Rate 48k Filter Response

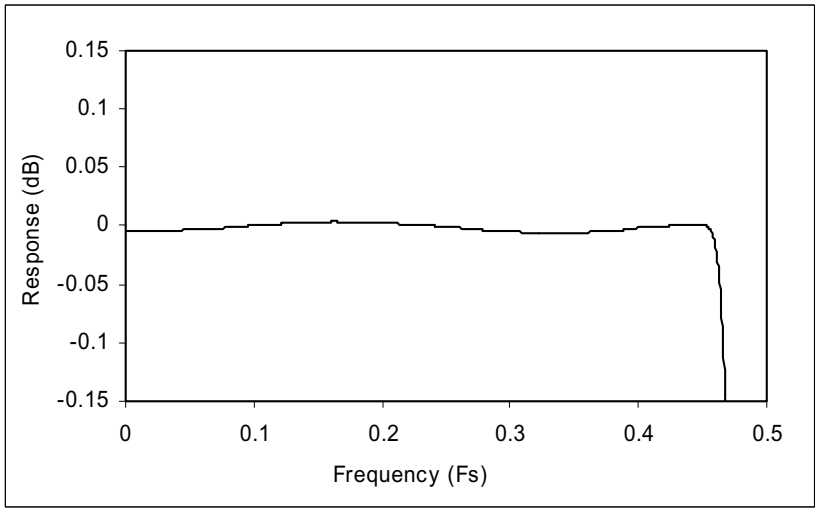

Figure 10 Single Rate 48k Filter Response

DUAL RATE 96k

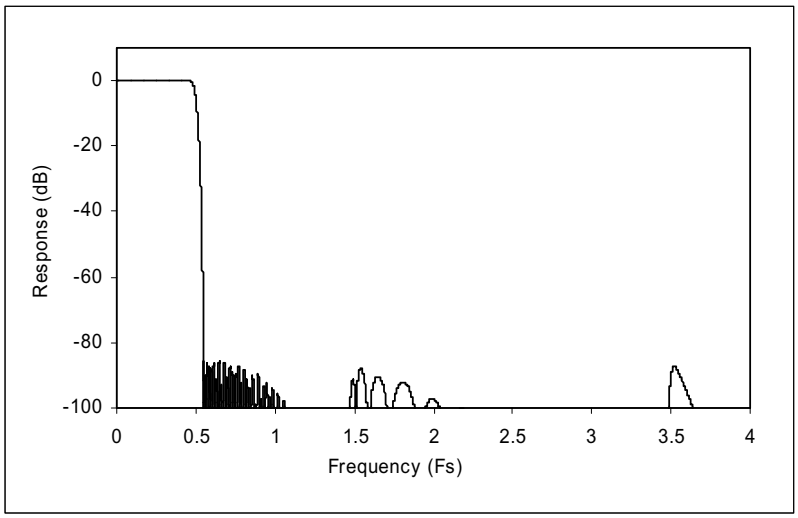

Figure 11 Dual Rate 96k Filter Response

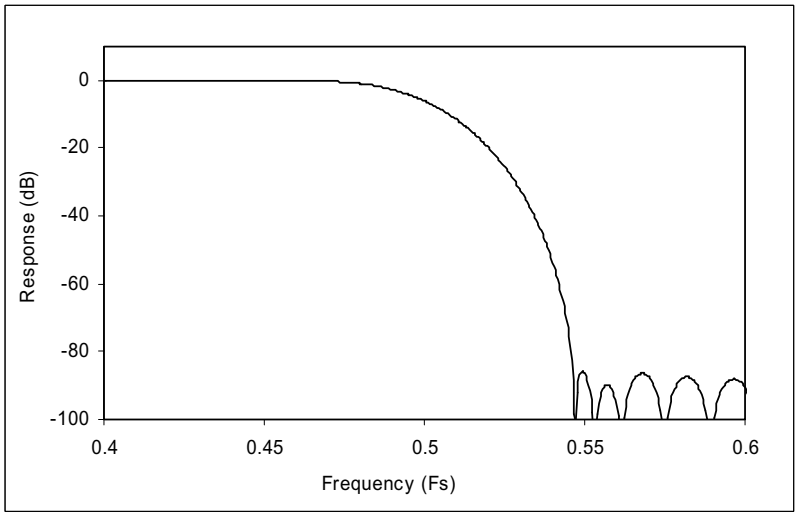

Figure 12 Dual Rate 96k Filter Response

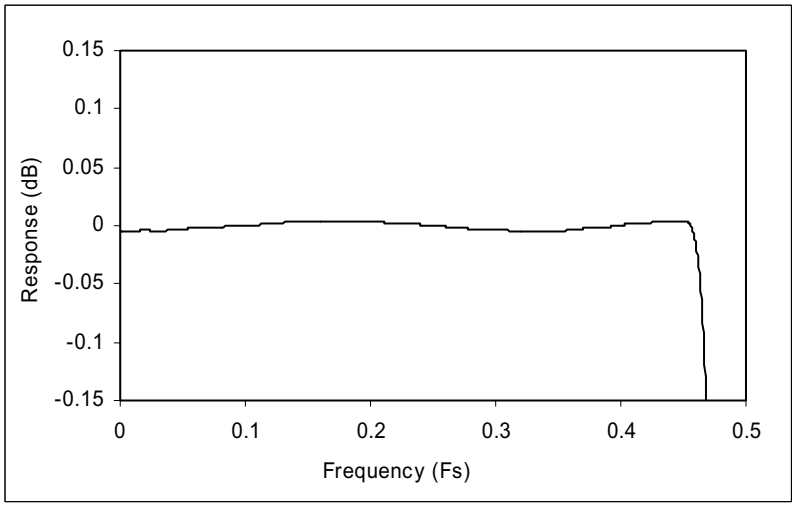

Figure 13 Dual Rate 96k Filter Response

QUAD RATE 192k

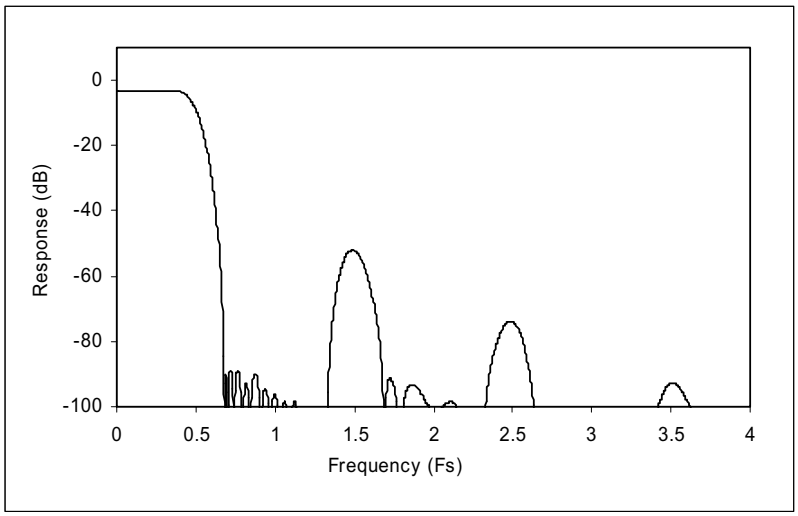

Figure 14 Quad Rate 192k Filter Response

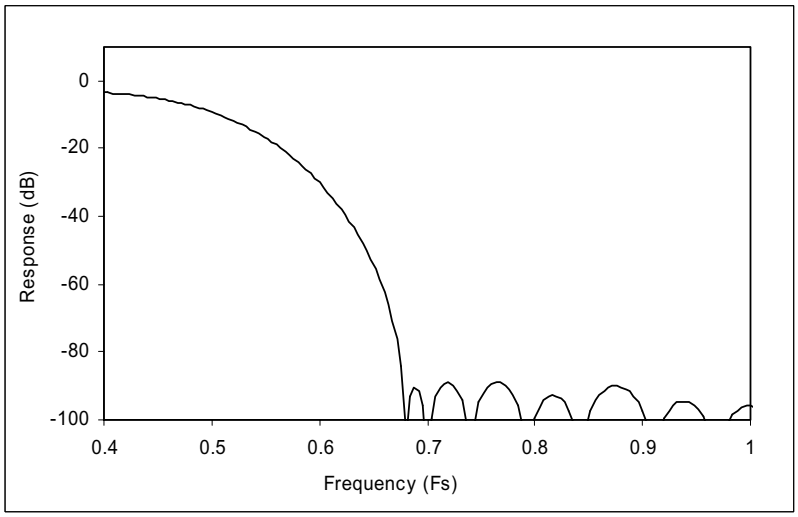

Figure 15 Quad Rate 192k Filter Response

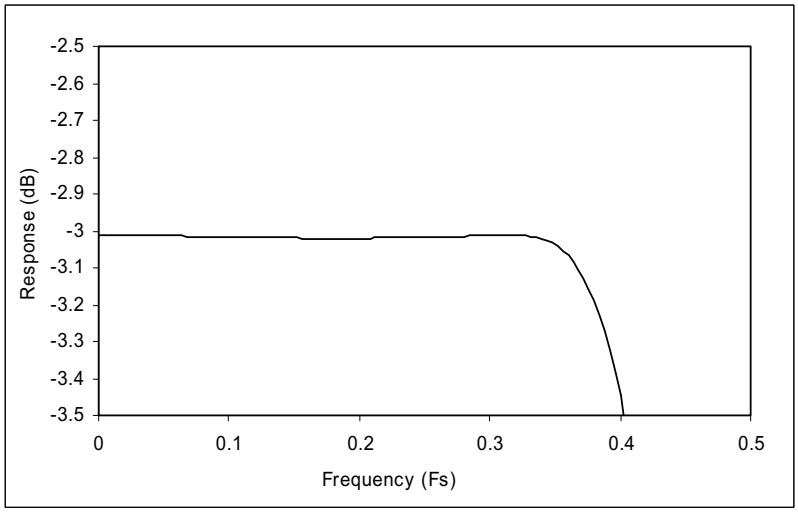

Figure 16 Quad Rate 192k Filter Response

DEVICE DESCRIPTION

INTRODUCTION

The WM8785 is a high performance stereo audio ADC designed for demanding recording applications such as DVD recorders, studio mixers, PVRs, and AV amplifiers. The WM8785 consists of stereo line level inputs, followed by a sigma-delta modulator and digital filtering.

The WM8785 uses a multi-bit high-order oversampling architecture delivering high SNR operating at oversampling ratios from 128fs to 32fs according to the sample rate. Sample rates from 8kHz to 192kHz are supported. The WM8785 supports master clock rates from 128fs to 768fs.

The digital filter is a high performance linear phase FIR filter. The digital filters are optimised for each sample rate. Also included is a selectable high pass filter to remove residual DC offsets from the input signal.

The output from the ADC is available on a configurable digital audio interface. It supports a number of audio data formats including I^2S, Left justified and Right justified or DSP, and can operate in master or slave modes.

The WM8785 can be controlled through a 2 wire or 3 wire MPU control interface. It is fully compatible and an ideal partner for a range of industry standard microprocessors, controllers and DSPs. A TDM bus is supported for multiplexing data output.

The WM8785 can be powered down under software control to reduce system power consumption.

DIGITAL AUDIO INTERFACE

The digital audio interface uses three pins:

- DOUT: ADC data output
- LRCLK: ADC data alignment clock
- BCLK: Bit clock, for synchronisation

The digital audio interface takes the data from the internal ADC digital filters and places it on DOUT and LRCLK. DOUT is the formatted digital audio data stream output from the ADC digital filters with left and right channels multiplexed together. LRCLK is an alignment clock that controls whether Left or Right channel data is present on the DOUT line. DOUT and LRCLK are synchronous with the BCLK signal with each data bit transition signified by a BCLK high to low transition. DOUT is always an output. BCLK and LRCLK maybe inputs or outputs depending whether the device is in Master or Slave mode, (see Master and Slave Mode Operation, below).

Four different audio data formats are supported:

- Left justified
- Right justified
- I^2S
- DSP

They are described in Audio Data Formats, below. Refer to the Electrical Characteristic section for timing information.

MASTER AND SLAVE MODE OPERATION

The WM8785 can be configured as either a master or slave mode device. As a master device the WM8785 generates BCLK and LRCLK and thus controls sequencing of the data transfer on DOUT. In slave mode, the WM8785 responds with data to clocks it receives over the digital audio interface. The mode can be selected by setting MCR=000 (see Table below). Master and slave modes are illustrated below.

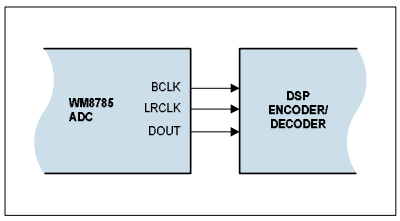

Figure 17a Master Mode

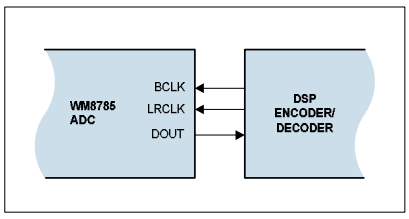

Figure 17b Slave Mode

AUDIO DATA FORMATS

In Left Justified mode, the MSB is available on the first rising edge of BCLK following an LRCLK transition. The other bits up to the LSB are then transmitted in order. Depending on word length, BCLK frequency and sample rate, there may be unused BCLK cycles before each LRCLK transition.

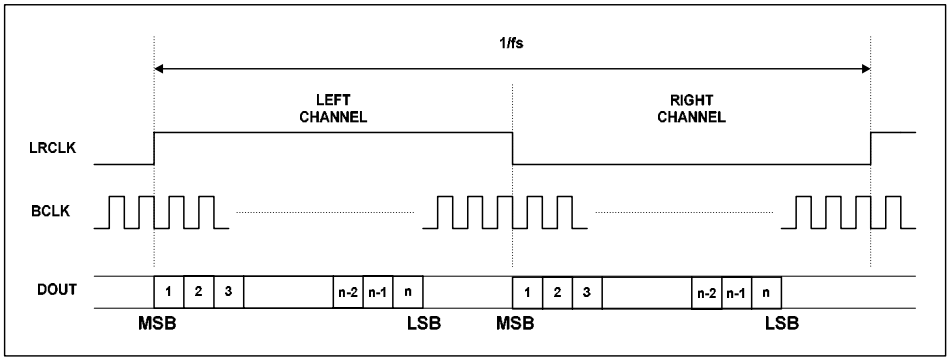

Figure 18 Left Justified Audio Interface (assuming n-bit word length)

In Right Justified mode, the LSB is available on the last rising edge of BCLK before an LRCLK transition. All other bits are transmitted before (MSB first). Depending on word length, BCLK frequency and sample rate, there may be unused BCLK cycles after each LRCLK transition.

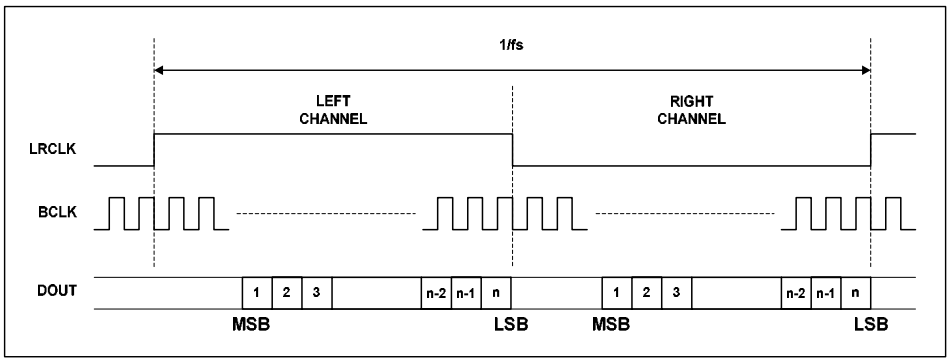

Figure 19 Right Justified Audio Interface (assuming n-bit word length)

In I^2S mode, the MSB is available on the second rising edge of BCLK following an LRCLK transition. The other bits up to the LSB are then transmitted in order. Depending on word length, BCLK frequency and sample rate, there may be unused BCLK cycles between the LSB of one sample and the MSB of the next.

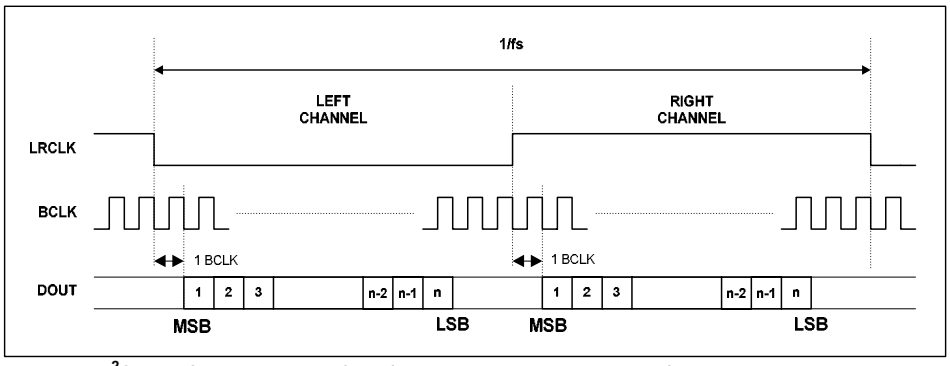

Figure 20 I^2S Justified Audio Interface (assuming n-bit word length)

In DSP/PCM mode, the left channel MSB is available on either the 1st (mode B) or 2nd (mode A) rising edge of BCLK (selectable by LRP) following a rising edge of LRC. Right channel data immediately follows left channel data. Depending on word length, BCLK frequency and sample rate, there may be unused BCLK cycles between the LSB of the right channel data and the next sample.

In device master mode, the LRC output will resemble the frame pulse shown in Figure 21 and Figure 22. In device slave mode, Figure 23 and Figure 24, it is possible to use any length of frame pulse less than 1/fs, providing the falling edge of the frame pulse occurs greater than one BCLK period before the rising edge of the next frame pulse.

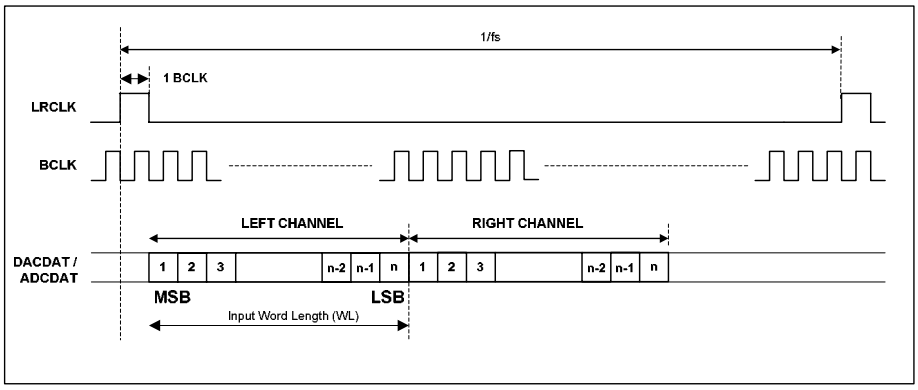

Figure 21 DSP/PCM Mode Audio Interface (mode A, LRP=0, Master)

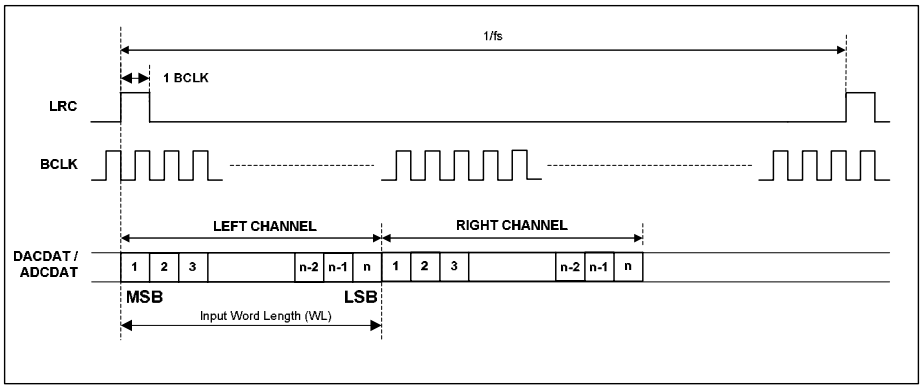

Figure 22 DSP/PCM Mode Audio Interface (mode B, LRP=1, Master)

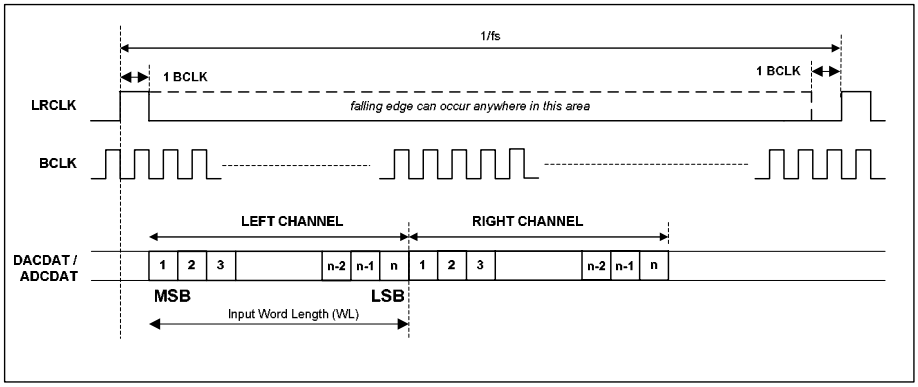

Figure 23 DSP/PCM Mode Audio Interface (mode A, LRP=0, Slave)

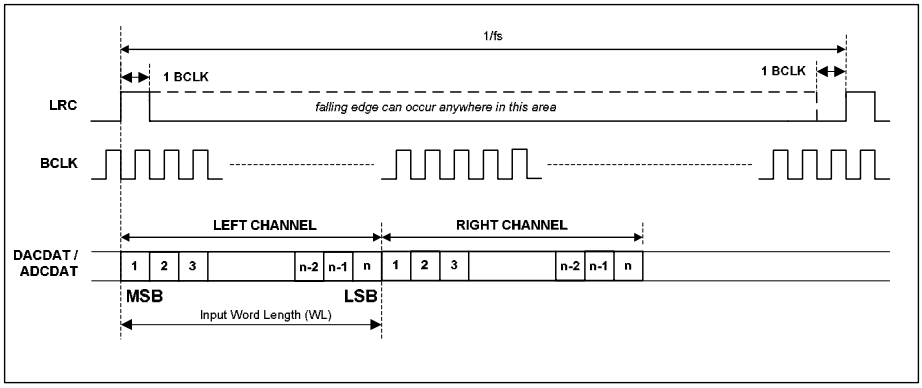

Figure 24 DSP/PCM Mode Audio Interface (mode B, LRP=1, Slave)

AUDIO INTERFACE CONTROL

The register bits controlling the audio interface are summarised below. Note that dynamically changing the software format may cause erroneous operation of the interfaces and is therefore not recommended.

All ADC data is 2's complement. The length of the digital audio data is programmable at 16/20/24 or 32 bits, as shown below. The ADC digital filters process data using 24 bits. If the WM8785 is programmed to output 16 or 20 bit data then it strips the LSBs from the 24 bit data. If the device is programmed to output 32 bits then it packs the LSBs with zeros.

In master mode LRCLK and BCLK are generated on chip. In slave mode they are received from an external source.

REGISTER ADDRESS	BIT	LABEL	DEFAULT	DESCRIPTION
R0 (00h) Sample Rate and Digital Audio Interface Format	6:5	FORMAT	10	Audio Data Format Select 11: DSP Format 10: I^2S Format 01: Left justified 00: Right justified
R1 (01h) Digital Audio Interface Format and TDM	1:0	WL	10	Audio Data Word Length 11: 32 bits (see Note) 10: 24 bits 01: 20 bits 00: 16 bits
	2	LRP	0	right, left and I^2S modes – LRCLK polarity 1 = invert LRCLK polarity 0 = normal LRCLK polarity
				DSP Mode – A/B select 1 = MSB is available on 1st BCLK rising edge after LRC rising edge (mode B) 0 = MSB is available on 2nd BCLK rising edge after LRC rising edge (mode A)
	3	BCLKINV	0	BCLK invert bit (for master and slave modes) 0 = BCLK not inverted 1 = BCLK inverted
	4	LRSWAP	0	Left/Right channel swap 1 = swap left and right DAC data in audio interface 0 = output left and right data as normal

Table 1 Audio Data Format Control

Note: Right Justified mode does not support 32-bit data. If WL=11 in Right justified mode, the actual word length is 24 bits.

DIGITAL HIGH PASS

The high pass filter can be enabled using the HPFL and HPFR bits (see digital filter characteristics)

REGISTER ADDRESS	BIT	LABEL	DEFAULT	DESCRIPTION
R2(02h) HPfilter , Output disable, Power down, Mono mode	0	HPFR	1	Digital High Pass Filter, Right Channel 0 = HPF Off 1 = HPF On
	1	HPFL	1	Digital High Pass Filter, Left Channel 0 = HPF Off 1 = HPF On

Table 2 Oversampling Ratio Selection

DATA OUT PIN DISABLE

To prevent any communication problems on the Audio Interface, the interface can be disabled (DOUT tristated and floating) using the SDODIS bit.

REGISTER ADDRESS	BIT	LABEL	DEFAULT	DESCRIPTION
R2(02h) HP Filter , Output disable, Power down, Mono mode	2	SDODIS	0	DOUT serial data pin disable 0 = DOUT pin enabled 1 = DOUT pin off (high impedance)

Table 3 Oversampling Ratio Selection

CONTROL INTERFACE

SELECTION OF CONTROL MODE

The WM8785 is controlled by writing to registers through a serial control interface. A control word consists of 16 bits. The first 7 bits (B15 to B9) are address bits that select which control register is accessed. The remaining 9 bits (B8 to B0) are register bits, corresponding to the 9 bits in each control register. The control interface can operate as either a 3-wire or 2-wire MPU interface. The CSB pin is sampled at power-up and selects the interface format. After power-up the pin is available to latch in control data in 3-wire interface mode.

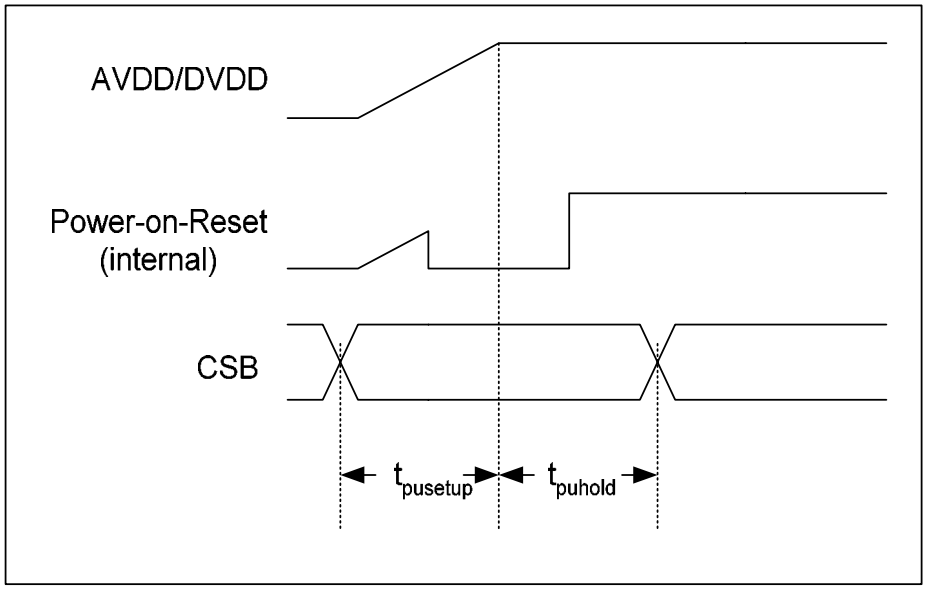

Figure 25 Control Interface Mode Selection

CSB PIN STATUS	INTERFACE FORMAT
Low	2 wire
High	3 wire

Table 4 Control Interface Mode Selection

SETUP/HOLD	TIME
tpusetup	250us
tpuhold	250us

Table 5 Control Interface Mode Selection

3-WIRE SERIAL CONTROL MODE

In 3-wire mode, every rising edge of SCLK clocks in one data bit from the SDIN pin. A rising edge on CSB latches in a complete control word consisting of the last 16 bits.

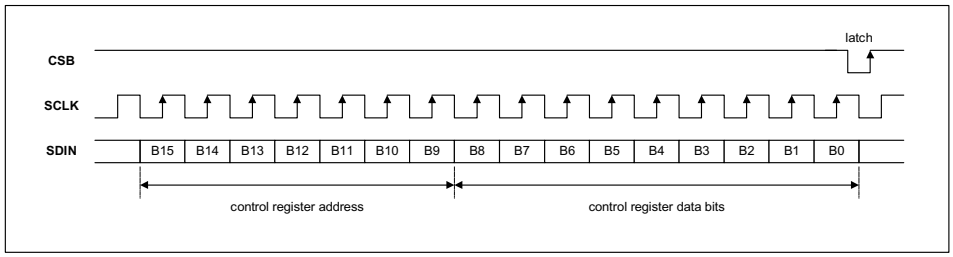

Figure 26 3-Wire Serial Control Interface

2-WIRE SERIAL CONTROL MODE

The WM8785 supports software control via a 2-wire serial bus. Many devices can be controlled by the same bus, and each device has a unique 7-bit address (this is not the same as the 7-bit address of each register in the WM8785).

The WM8785 operates as a slave device only. The controller indicates the start of data transfer with a high to low transition on SDIN while SCLK remains high. This indicates that a device address and data will follow. All devices on the 2-wire bus respond to the start condition and shift in the next eight bits on SDIN (7-bit address + Read/Write bit, MSB first). If the device address received matches the address of the WM8785 and the R/W bit is '0', indicating a write, then the WM8785 responds by pulling SDIN low on the next clock pulse (ACK). If the address is not recognised or the R/W bit is '1', the WM8785 returns to the idle condition and wait for a new start condition and valid address.

Once the WM8785 has acknowledged a correct address, the controller sends the first byte of control data (B15 to B8, i.e. the WM8785 register address plus the first bit of register data). The WM8785 then acknowledges the first data byte by pulling SDIN low for one clock pulse. The controller then sends the second byte of control data (B7 to B0, i.e. the remaining 8 bits of register data), and the WM8785 acknowledges again by pulling SDIN low.

The transfer of data is complete when there is a low to high transition on SDIN while SCLK is high. After receiving a complete address and data sequence the WM8785 returns to the idle state and waits for another start condition. If a start or stop condition is detected out of sequence at any point during data transfer (i.e. SDIN changes while SCLK is high), the device jumps to the idle condition.

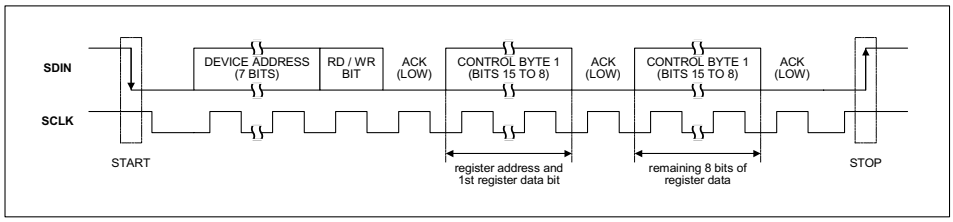

Figure 27 2-Wire Serial Control Interface

The WM8785 device address is 0011010.

TIME DIVISION MULTIPLEXED DATA OUT

The WM8785 can be used to time division multiplex several data channels at once. For example, the diagram below illustrates 4 devices connected to the same TDM bus. While one DOUT pin is driving data, the others will be tri-stated.

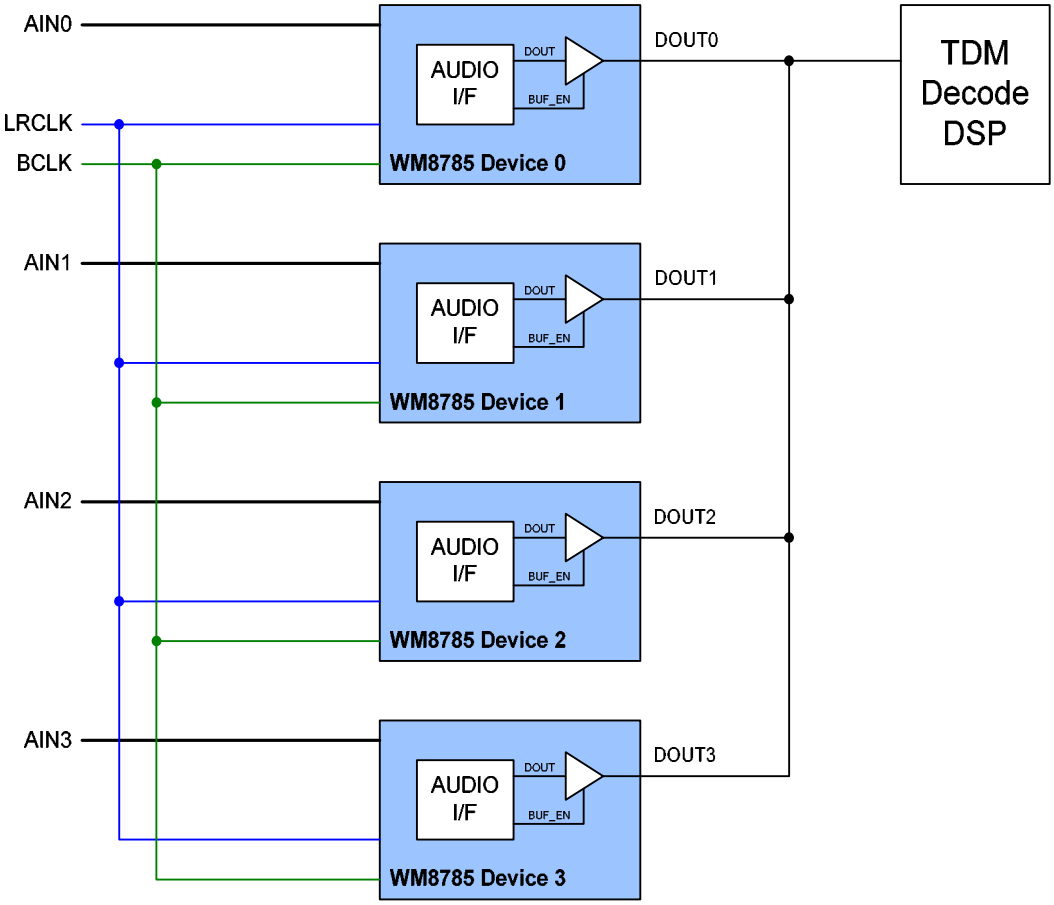

Figure 28 WM8785 in Time Division Multiplexing Setup

Note:

1. TDM is only available in slave mode.
2. Right justified mode is not supported

TDM SELECTION

The figure below indicates how data is multiplexed onto the TDM bus, in left justified mode. This assumes we have 4 devices, and each device has 2 data channels:

- LCHAN = left channel
- RCHAN = right channel

Each channel is allocated 32 BCLKs

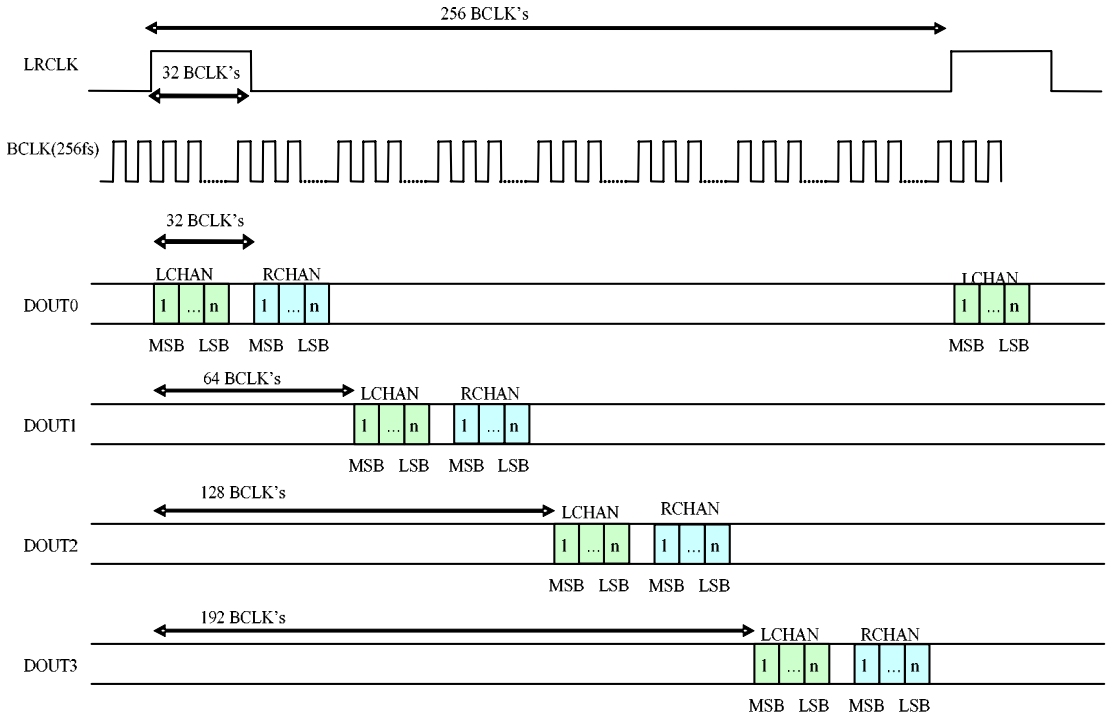

Figure 29 WM8785 in Time Division Multiplexing Left Justified Mode

Up to 4 devices (8 channels) can be supported, which would require 256 BCLKs per sample. (whereas 128 BCLKs will allow only 2 devices, or 4 channels). The table below shows the range of BCLK frequencies required.

BCLK RATE	DEVICES THAT CAN BE SUPPORTED	OVER-SAMPLE RATIOS SUPPORTED (SET BY OSR)
64 fs 128 fs 192 fs	1 1, 2 1, 2	Single/dual/quad rates all supported
256 fs	1, 2, 3, 4	Single rate only supported

Table 6 Range of BCLK Frequencies Required

Note: MCLK frequency must always be greater or equal to BCLK frequency

To avoid bus contention all chips on the TDM should be programmed before DOUT is released after power up (DOUT is held at vss for 32 samples after power-up). Alternatively SDODIS should be set while devices are programmed (to tri-state DOUT).

Two registers must be set to enter TDM mode:

- DEVNO[2:0] sets the number of devices which are on the bus
- TDM[2:0] allocates a TDM slot to the device

REGISTER ADDRESS	BIT	LABEL	DEFAULT	DESCRIPTION
R1(h01) Clocking, Sample Rates, Oversampling and Signal Control	7:5	DEVNO[2:0]	000	Number of TDM Devices 000 = 1 Device 001 = 2 Devices 010 = 3 Devices 011 = 4 Devices

Table 7 DEVNO

REGISTER ADDRESS	BIT	LABEL	DEFAULT	DESCRIPTION
R2(h02) Clocking, Sample Rates, Oversampling and Signal Control	8:6	TDM[2:0]	000	Time Division Multiplexing Device Select 000 = Device 0 (no delay) 001 = Device 1 (64 BCLK delay) 010 = Device 2 (128 BCLK delay) 011 = Device 3 (192 BCLK delay)

Table 8 TDM

Note: When TDM is not required, the register will default to 000 (normal operation)

The figures below indicate TDM mode for I2S and DSP mode A.

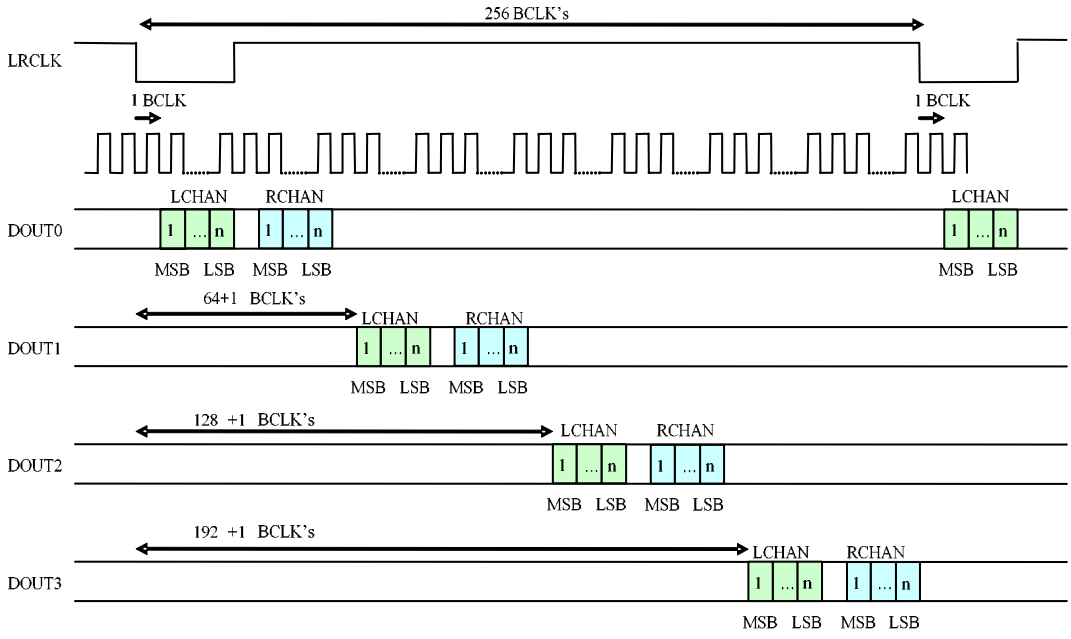

Figure 30 TDM Bus I²S Mode

OVERSAMPLING RATIOS AND SIGMA-DELTA MODULATOR FREQUENCY

For correct operation of the device and optimal performance, the user must select the appropriate ADC modulator oversampling ratio. The oversampling ratio is selected using the OSR[1:0] bits.

REGISTER ADDRESS	BIT	LABEL	DEFAULT	DESCRIPTION
R0(h00) Signal Control	4:3	OSR[1:0]	00	Oversampling Ratio Control 00: Single Rate (128fs) 01: Dual Rate (64fs) 10: Quad Rate (32fs) 11: Not Valid

Table 9 Oversampling Ratio Selection

The WM8785 can operate at sample rates from 8kHz to 192kHz. The WM8785 uses a sigma-delta modulator that operates at frequencies between 1.024MHz and 6.144MHz

SAMPLING RATE (LRCLK)	OVERSAMPLING RATIO	SIGMA-DELTA MODULATOR FREQUENCY (MHZ)
8kHz	Single Rate (128fs)	1.024
32kHz	Single Rate (128fs)	4.096
44.1kHz	Single Rate (128fs)	5.6448
48kHz	Single Rate (128fs)	6.144
96kHz	Dual Rate (64fs)	6.144
192kHz	Quad Rate (32fs)	6.144

Table 10 Sigma-delta Modulator Frequency

MASTER CLOCK AND AUDIO SAMPLE RATES

Master clock frequencies of $128f_s$, $192f_s$, $256f_s$, $384f_s$, $512f_s$ and $768f_s$ are supported. In slave mode the WM8785 automatically detects the audio sample rate. In Master mode the master clock frequency is selected using MCR[2:0] bits. This is described in table below.

REGISTER ADDRESS	BIT	LABEL	DEFAULT	DESCRIPTION
R0(h00) Clocking, Sample Rates,	2:0	MCR[2:0]	000	Master/Slave Selection 000: Slave Mode 001: Master Mode, 128fs 010: Master Mode, 192fs 011: Master Mode, 256fs 100: Master Mode, 384fs 101: Master Mode, 512fs 110: Master Mode, 768fs

Table 11 Master Clock Frequency

The master clock (MCLK) is used to operate the digital filters and the noise shaping circuits. The WM8785 supports a wide range of master clock frequencies, and can generate many commonly used audio sample rates directly from the master clock. Table 1 shows the recommended master clock frequencies for different sample rates

SAMPLING RATE (LRCLK)	OVERSAMPLING RATIO	MASTER CLOCK FREQUENCY (MHZ)					
		128fs	192fs	256fs	384fs	512fs	768fs
32kHz	Single Rate	-	-	8.192	12.288	16.384	24.576
44.1kHz	Single Rate	-	-	11.2896	16.9344	22.5792	33.8688
48kHz	Single Rate	-	-	12.288	18.432	24.576	36.864
96kHz	Dual Rate	-	-	24.576	36.864	-	-
192kHz	Quad Rate	24.576	36.864	-	-	-	-

Table 12 Slave Mode: Recommended Master Clock Frequency Selection

MLCK AND LRCLK PHASE RELATIONSHIP

The WM8785 does not require a specific phase relationship between MLCK and LRCLK. If the relationship between MCLK and LRCLK changes by more than +/-8 BCLKs in a 64 BLCK frame, the WM8785 will attempt to re-synchronise. During re-synchronisation, data samples may be dropped or duplicated.

POWER DOWN CONTROL

The WM8785 can be powered down by setting the PWRDNL and PWRDNR bits. This is described in the table below.

REGISTER ADDRESS	BIT	LABEL	DEFAULT	DESCRIPTION
R2(02h) Signal control	3	PWRDNR	0	Power Down Right Channel 0 = Power On 1 = Power Off
	4	PWRDNL	0	Power Down Left Channel 0 = Power On 1 = Power Off

Table 13 Power Down Control

REGISTER MAP

REGISTER	ADDRESS	REMARK	BIT8	BIT7	BIT6	BIT5	BIT4	BIT3	BIT2	BIT1	BIT0	DEFAULT
R0(00h)	00_0000	Sample Rate And Audio IF Format	0	0	FORMAT		OSR		MCR			0_0000_0011
R1(01h)	00_0001	Audio IF Format And TDM	0	DEVNO			LRSWP	BCLKINV	LRP	WL		0_0000_1010
R2(02h)	00_0010	Signal Control	TDM			0	PWRDNL	PWRDNR	SDODIS	HPFL	HPFR	0_0000_0011
R7(07h)	00_0111	Reset	Writing to reg 7 will cause software reset									0_0000_0000

Table 14 Register Map for Control Interface

Notes:

1. All unused register bits should be set to zero
2. The interface will initiate SWRB whenever R7 is addressed, regardless of the data input.
3. SWRB is released on the next register write or after 4 MCLK cycles (which ever occurs first).
4. Until the SWRB is released, DOUT is forced to zero.
5. DOUT remains zero for a count of 32 sample clocks SWRB is released, this count is driven by MCLK and is independent of any external LRCLK.

APPLICATIONS INFORMATION

RECOMMENDED EXTERNAL COMPONENTS

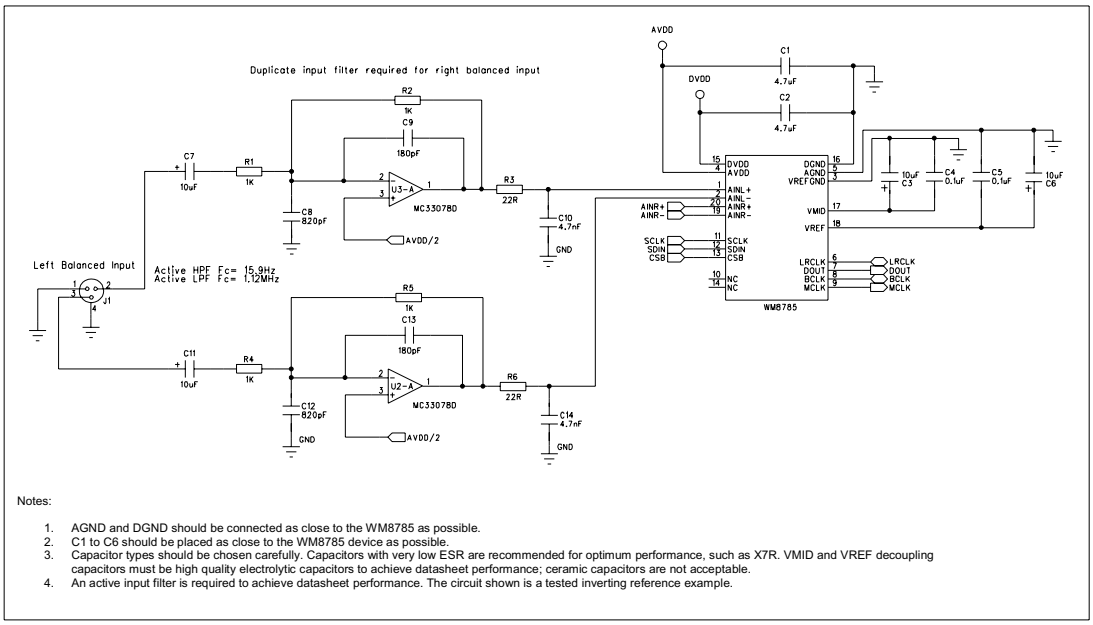

Notes:

1. AGND and DGND should be connected as close to the WM8785 as possible.
2. C1 to C6 should be placed as close to the WM8785 device as possible.
3. Capacitor types should be chosen carefully. Capacitors with very low ESR are recommended for optimum performance, such as X7R. VMID and VREF decoupling capacitors must be high quality electrolytic capacitors to achieve datasheet performance; ceramic capacitors are not acceptable.
4. An active input filter is required to achieve datasheet performance. The circuit shown is a tested inverting reference example.

Figure 31 External Component Diagram

PACKAGE DIMENSIONS

DS: 20 PIN SSOP (7.2 x 5.3 x 1.75 mm) **DM0015.C**

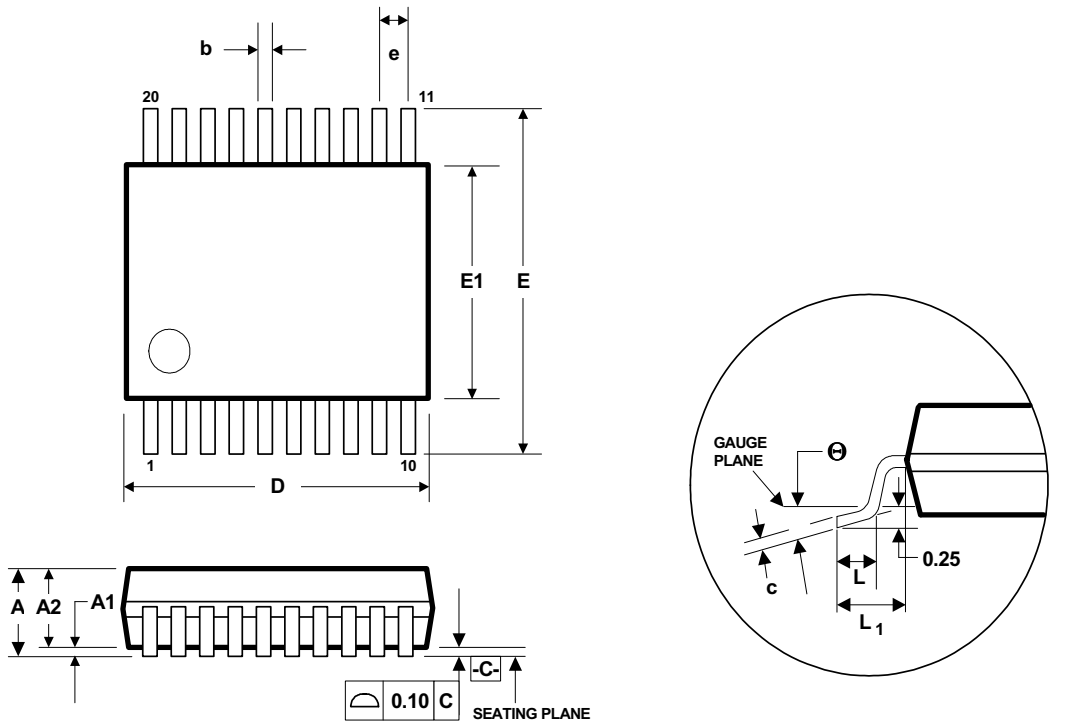

Symbols	Dimensions (mm)		
	MIN	NOM	MAX
A	-----	-----	2.0
A_1	0.05	-----	-----
A_2	1.65	1.75	1.85
b	0.22	0.30	0.38
c	0.09	-----	0.25
D	6.90	7.20	7.50
e		0.65 BSC	
E	7.40	7.80	8.20
E_1	5.00	5.30	5.60
L	0.55	0.75	0.95
L_1		1.25 REF	
θ	0°	4°	8°
REF:	JEDEC.95, MO-150		

NOTES:
A. ALL LINEAR DIMENSIONS ARE IN MILLIMETERS.
B. THIS DRAWING IS SUBJECT TO CHANGE WITHOUT NOTICE.
C. BODY DIMENSIONS DO NOT INCLUDE MOLD FLASH OR PROTRUSION, NOT TO EXCEED 0.20MM.
D. MEETS JEDEC.95 MO-150, VARIATION = AE. REFER TO THIS SPECIFICATION FOR FURTHER DETAILS.

IMPORTANT NOTICE

Wolfson Microelectronics plc (WM) reserve the right to make changes to their products or to discontinue any product or service without notice, and advise customers to obtain the latest version of relevant information to verify, before placing orders, that information being relied on is current. All products are sold subject to the WM terms and conditions of sale supplied at the time of order acknowledgement, including those pertaining to warranty, patent infringement, and limitation of liability.

WM warrants performance of its products to the specifications applicable at the time of sale in accordance with WM's standard warranty. Testing and other quality control techniques are utilised to the extent WM deems necessary to support this warranty. Specific testing of all parameters of each device is not necessarily performed, except those mandated by government requirements.

In order to minimise risks associated with customer applications, adequate design and operating safeguards must be used by the customer to minimise inherent or procedural hazards. Wolfson products are not authorised for use as critical components in life support devices or systems without the express written approval of an officer of the company. Life support devices or systems are devices or systems that are intended for surgical implant into the body, or support or sustain life, and whose failure to perform when properly used in accordance with instructions for use provided, can be reasonably expected to result in a significant injury to the user. A critical component is any component of a life support device or system whose failure to perform can be reasonably expected to cause the failure of the life support device or system, or to affect its safety or effectiveness.

WM assumes no liability for applications assistance or customer product design. WM does not warrant or represent that any license, either express or implied, is granted under any patent right, copyright, mask work right, or other intellectual property right of WM covering or relating to any combination, machine, or process in which such products or services might be or are used. WM's publication of information regarding any third party's products or services does not constitute WM's approval, license, warranty or endorsement thereof.

Reproduction of information from the WM web site or datasheets is permissible only if reproduction is without alteration and is accompanied by all associated warranties, conditions, limitations and notices. Representation or reproduction of this information with alteration voids all warranties provided for an associated WM product or service, is an unfair and deceptive business practice, and WM is not responsible nor liable for any such use.

Resale of WM's products or services with statements different from or beyond the parameters stated by WM for that product or service voids all express and any implied warranties for the associated WM product or service, is an unfair and deceptive business practice, and WM is not responsible nor liable for any such use.

ADDRESS:

Wolfson Microelectronics plc
Westfield House
26 Westfield Road
Edinburgh
EH11 2QB
United Kingdom

Tel :: +44 (0)131 272 7000
Fax :: +44 (0)131 272 7001
Email :: sales@wolfsonmicro.com