Online data sheet



WLL180T-F634

WLL180T

FIBER-OPTIC SENSORS AND FIBERS

SICK
Sensor Intelligence.



Illustration may differ

Ordering information

Type	Part no.
WLL180T-F634	6050761

Other models and accessories → www.sick.com/WLL180T

Detailed technical data

Features

Device type	Expansion unit
Sensor/detection principle	Fiber-optic photoelectric sensor
Dimensions (W x H x D)	10.5 mm x 34.6 mm x 71.9 mm
Housing design (light emission)	Rectangular
Sensing range max.	0 m ... 20 m, Through-beam system [1) 2)]
Sensing range	0 mm ... 1,400 mm, Proximity system [3) 4)] 0 m ... 18 m, Through-beam system [1) 2)]
Focus	[5)]
Type of light	Visible red light
Light source	LED [6)]
Angle of dispersion	Approx. 65° [5)]
Wave length	650 nm
Adjustment	Menu-controlled Single teach-in button
Time type	Without time delay Off delay On delay ON and OFF delay One shot
Delay time	Programmable, 0 ms, 9,999 ms
Indication	Display

1) Sensing range with 8 ms response time. Reduction with shorter response time (see tables LL3/WLL180T).
2) LL3-TX01.
3) Objects to be sensed with 90% reflectivity (based on DIN 5033 white standard). Sensing range with 8 ms response time. Reduction with shorter response time (see tables LL3/WLL180T).
4) LL3-DK06.
5) See LL3 fiber-optic data.
6) Average service life: 100,000 h at T_U = +25 °C.

Display	LED status display / 2x 4-character digital dual displays, Set value (green indicator) and actual value (red indicator) are displayed simultaneously, display of parameters

[1] Sensing range with 8 ms response time. Reduction with shorter response time (see tables LL3/WLL180T).
[2] LL3-TX01.
[3] Objects to be sensed with 90% reflectivity (based on DIN 5033 white standard). Sensing range with 8 ms response time. Reduction with shorter response time (see tables LL3/WLL180T).
[4] LL3-DK06.
[5] See LL3 fiber-optic data.
[6] Average service life: 100,000 h at T_U = +25 °C.

Mechanics/electronics

Supply voltage	12 V DC ... 24 V DC [1]
Ripple	≤ 10 % [2]
Power consumption	≤ 50 mA [3]
Output type	PNP
Number of switching outputs	2
Switching mode	Light/dark switching
Switching mode selector	Manually selectable
Output current $I_{max.}$	≤ 100 mA
Response time	≤ 16 µs, ≤ 70 µs, ≤ 250 µs, ≤ 2,000 µs, ≤ 8,000 µs [4]
Switching frequency	31.2 kHz 7.1 kHz 2 kHz 250 Hz 62.5 Hz
Input	-
Connection type	Connector M8, 4-pin
Circuit protection	A [5] B [6] C [7] D [8]
Protection class	III
Weight	20 g
Housing material	ABS/PCPlastic
Enclosure rating	IP50 [9]
Items supplied	BEF-WLL180 mounting bracket
Ambient operating temperature	–25 °C ... +55 °C [10]

[1] +- 10%.
[2] May not exceed or fall below U_V tolerances.
[3] Without load.
[4] Selectable.
[5] A = V_S connections reverse-polarity protected.
[6] B = inputs and output reverse-polarity protected.
[7] C = interference suppression.
[8] D = outputs overcurrent and short-circuit protected.
[9] With correctly attached fibre-optic cable LL3 and closed protection hood.
[10] Operating temperature fluctuates according to number of devices connected: 4–8 devices: –25 °C ... +50 °C (output current 50 mA) / 9–16 devices: –25 °C ... +45 °C (output current 20 mA).

Ambient storage temperature	–40 °C ... +70 °C
UL File No.	NRKH2.E300503 & NRKH8.E300503

[1] +- 10%.
[2] May not exceed or fall below U_V tolerances.
[3] Without load.
[4] Selectable.
[5] A = V_S connections reverse-polarity protected.
[6] B = inputs and output reverse-polarity protected.
[7] C = interference suppression.
[8] D = outputs overcurrent and short-circuit protected.
[9] With correctly attached fibre-optic cable LL3 and closed protection hood.
[10] Operating temperature fluctuates according to number of devices connected: 4–8 devices: –25 °C ... +50 °C (output current 50 mA) / 9–16 devices: –25 °C ... +45 °C (output current 20 mA).

Classifications

ECl@ss 5.0	27270905
ECl@ss 5.1.4	27270905
ECl@ss 6.0	27270905
ECl@ss 6.2	27270905
ECl@ss 7.0	27270905
ECl@ss 8.0	27270905
ECl@ss 8.1	27270905
ECl@ss 9.0	27270905
ETIM 5.0	EC002651
ETIM 6.0	EC002651
UNSPSC 16.0901	39121528

Adjustments possible

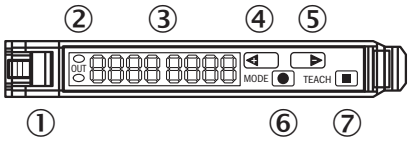

① Locking the fiber-optic cables
② LED indicator orange, lights up when switching output is active
③ Numeric display 2 x 4-digit; green: switching threshold, operating mode; red: actual value, Teach-in and function parameter
④ Step pushbutton > (manual switching threshold: higher/next function parameter)
⑤ Step pushbutton < (manual switching threshold: lower/previous function parameter)
⑥ Mode/Enter-button
⑦ Teach-in button

Connection diagram

Cd-213

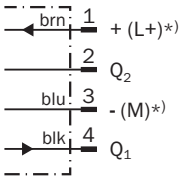

*) Only base unit

Dimensional drawing (Dimensions in mm (inch))

Expansion unit

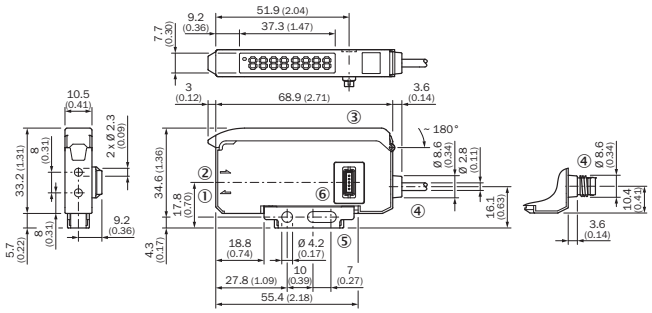

① Sender LED, installation of LL3 fibre-optic cable (sender fibre)
② Receiver, installation of LL3 fibre optic cable (receiver fibre)
③ Protective hood opens approx. 180 °
④ Connection
⑤ Mounting bracket, included with delivery
⑥ Bus connector

Recommended accessories

Other models and accessories ➜ www.sick.com/WLL180T

	Brief description	Type	Part no.
Mounting brackets and plates			
	Mounting bracket, steel, zinc coated, without mounting hardware	BEF-WLL170	5306574
		BEF-WLL180	5325812
Other mounting accessories			
	Rail end piece for block mounting, Stainless steel, mounting hardware included	BF-EB01-W190	5313011
	Cutter for fibers, supplied with LL3	FC	5304141

	Brief description	Type	Part no.
Plug connectors and cables			
	Head A: female connector, M8, 4-pin, straight Head B: cable Cable: PVC, unshielded, 2 m	DOL-0804-G02M	6009870
	Head A: female connector, M8, 4-pin, straight Head B: cable Cable: PVC, unshielded, 5 m	DOL-0804-G05M	6009872
	Head A: female connector, M8, 4-pin, angled Head B: cable Cable: PVC, unshielded, 2 m	DOL-0804-W02M	6009871
	Head A: female connector, M8, 4-pin, angled Head B: cable Cable: PVC, unshielded, 5 m	DOL-0804-W05M	6009873

SICK AT A GLANCE

SICK is one of the leading manufacturers of intelligent sensors and sensor solutions for industrial applications. A unique range of products and services creates the perfect basis for controlling processes securely and efficiently, protecting individuals from accidents and preventing damage to the environment.

We have extensive experience in a wide range of industries and understand their processes and requirements. With intelligent sensors, we can deliver exactly what our customers need. In application centers in Europe, Asia and North America, system solutions are tested and optimized in accordance with customer specifications. All this makes us a reliable supplier and development partner.

Comprehensive services complete our offering: SICK LifeTime Services provide support throughout the machine life cycle and ensure safety and productivity.

For us, that is “Sensor Intelligence.”

WORLDWIDE PRESENCE:

Contacts and other locations –www.sick.com