Online data sheet



WLL170-2N132

WLL170-2

FIBER-OPTIC SENSORS AND FIBERS

SICK
Sensor Intelligence.



Illustration may differ

Ordering information

Type	Part no.
WLL170-2N132	6029515

Other models and accessories ➜ www.sick.com/WLL170-2

Detailed technical data

Features

Sensor/detection principle	Fiber-optic photoelectric sensor
Dimensions (W x H x D)	10.5 mm x 35.5 mm x 83.7 mm
Housing design (light emission)	Rectangular
Sensing range max.	0 mm ... 4,000 mm, Through-beam system [1]
Sensing range	0 mm ... 160 mm, Proximity system [2] [3] 0 mm ... 700 mm, Through-beam system [4]
Focus	[5]
Type of light	Visible red light
Light source	LED [6]
Angle of dispersion	Approx. 65° [5]
Wave length	660 nm
Adjustment	Potentiometer, 10 turns
Time type	Off delay
Delay time	Selectable by sliding switch, 40 ms
Indication	LED

[1] LL3-TB02 and tip adapter LL3-TA01.
[2] Objects to be sensed with 90% reflectivity (based on DIN 5033 white standard). Sensing range depends on fiber-optic cable.
[3] LL3-DK06.
[4] LL3-TB01.
[5] See LL3 fiber-optic data.
[6] Average service life: 100,000 h at T_U = +25 °C.

Mechanics/electronics

Supply voltage	10 V DC ... 30 V DC [1]
Ripple	10 % [2]
Power consumption	≤ 30 mA [3]
Output type	NPN
Number of switching outputs	1
Switching mode	Light/dark switching
Switching mode selector	Selectable via light/dark selector
Output current $I_{max.}$	≤ 100 mA
Response time	≤ 250 µs [4]
Switching frequency	2,000 Hz [5]
Input	-
Connection type	Cable, 3-wire, 2 m [6]
Cable material	PVC
Conductor cross-section	0.2 mm²
Cable diameter	Ø 3.8 mm
Circuit protection	A [7] B [8] C [9] D [10]
Protection class	III
Weight	70 g
Housing material	Plastic, ABS/PC
Enclosure rating	IP66 [11]
Items supplied	BEF-WLL170 mounting bracket
Ambient operating temperature	–25 °C ... +55 °C
Ambient storage temperature	–40 °C ... +70 °C
UL File No.	NRKH.E300503 & NRKH7.E300503

[1] Limit values.
[2] May not exceed or fall below U_V tolerances.
[3] Without load.
[4] Signal transit time with resistive load.
[5] With light/dark ratio 1:1.
[6] Do not bend below 0 °C.
[7] A = V_S connections reverse-polarity protected.
[8] B = inputs and output reverse-polarity protected.
[9] C = interference suppression.
[10] D = outputs overcurrent and short-circuit protected.
[11] With correctly attached fibre-optic cable LL3 and closed protection hood.

Classifications

ECl@ss 5.0	27270905
ECl@ss 5.1.4	27270905
ECl@ss 6.0	27270905
ECl@ss 6.2	27270905

ECl@ss 7.0	27270905
ECl@ss 8.0	27270905
ECl@ss 8.1	27270905
ECl@ss 9.0	27270905
ETIM 5.0	EC002651
ETIM 6.0	EC002651
UNSPSC 16.0901	39121528

Adjustments possible

WLL170-2

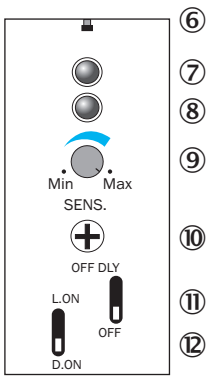

⑥ Indicating pin correctly inserted LL3 fiber
⑦ LED indicator orange, lights up when switching output is active
⑧ LED signal strength indicator green, lights up, when light received< 0.9 or >1.1 (switching threshold = 1)
⑨ Sensitivity scale 270°
⑩ Sensitivity control (10 revolutions)
⑪ OFF delay selector switch: “OFF DLY” (on)/“OFF” (off), 40 ms fixed
⑫ Selector switch: "L.ON" (light switching) /"D.ON" (dark switching)

Connection diagram

Cd-043

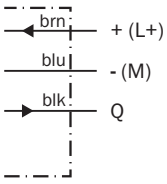

Dimensional drawing (Dimensions in mm (inch))

WLL170-2

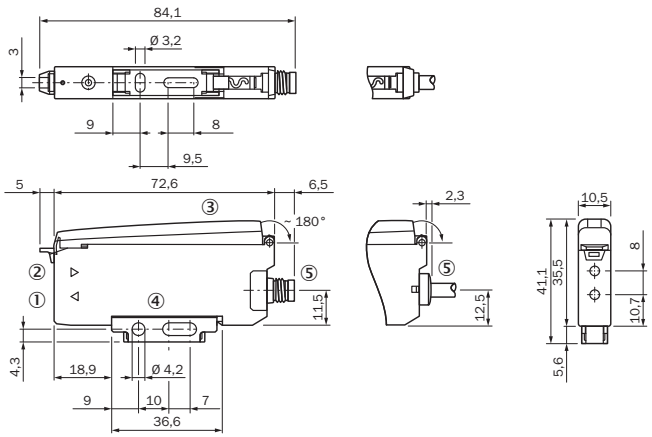

① Sender LED, installation of LL3 fibre-optic cable (sender fibre)
② Receiver, installation of LL3 fibre optic cable (receiver fibre)
③ Protective hood, can be raised at both ends
④ Mounting bracket, included with delivery
⑤ Connection

Recommended accessories

Other models and accessories ➜ www.sick.com/WLL170-2

	Brief description	Type	Part no.
Mounting brackets and plates			
	Mounting bracket, steel, zinc coated, without mounting hardware	BEF-WLL170	5306574
Other mounting accessories			
	Rail end piece for block mounting, Stainless steel, mounting hardware included	BEF-EB01-W190	5313011
	Cutter for fibers, supplied with LL3	FC	5304141

SICK AT A GLANCE

SICK is one of the leading manufacturers of intelligent sensors and sensor solutions for industrial applications. A unique range of products and services creates the perfect basis for controlling processes securely and efficiently, protecting individuals from accidents and preventing damage to the environment.

We have extensive experience in a wide range of industries and understand their processes and requirements. With intelligent sensors, we can deliver exactly what our customers need. In application centers in Europe, Asia and North America, system solutions are tested and optimized in accordance with customer specifications. All this makes us a reliable supplier and development partner.

Comprehensive services complete our offering: SICK LifeTime Services provide support throughout the machine life cycle and ensure safety and productivity.

For us, that is “Sensor Intelligence.”

WORLDWIDE PRESENCE:

Contacts and other locations –www.sick.com