User's Guide
SWRU382A–November 2014–Revised December 2014

WL1837MODCOM8I WLAN MIMO and Bluetooth® Module Evaluation Board for TI Sitara™ Platform

The WL1837MODCOM8I is a Wi-Fi® dual-band, *Bluetooth*, and BLE module evaluation board (EVB) with the TI WL1837 module (WL1837MOD, with *Bluetooth*) or WL1807 module (WL1807MOD, without *Bluetooth*). The WL18x7MOD is a certified WiLink™ 8 module from TI that offers high throughput and extended range along with Wi-Fi and *Bluetooth* coexistence in a power-optimized design. The WL1807MOD offers A 2.4- and 5-GHz module solution with two antennas supporting industrial temperature grade. The module is FCC, IC, ETSI/CE, and TELEC certified for AP (with DFS support) and client. TI offers drivers for high-level operating systems, such as Linux®, Android™, WinCE, and RTOS.TI.

Contents

1 Overview ... 3
1.1 General Features ... 3
1.2 Key Benefits ... 3
1.3 Applications ... 4
2 Board Pin Assignment ... 4
2.1 Pin Description ... 5
2.2 Jumper Connections ... 7
3 Electrical Characteristics ... 7
4 Approved Antenna Types and Maximum Gain Values ... 8
5 Antenna Characteristics ... 9
5.1 VSWR ... 9
5.2 Efficiency ... 10
5.3 Radio Pattern ... 10
6 Circuit Design ... 11
6.1 EVB Reference Schematics ... 11
6.2 Bill of Materials (BOM) ... 12
7 Layout Guidelines ... 13
7.1 Board Layout ... 13
8 Ordering Information ... 18

List of Figures

1 WL1837MODCOM8I EVB (Top View) ... 3
2 EVB Top View ... 4
3 EVB (Bottom View) ... 5
4 Antenna VSWR Characteristics ... 9
5 Antenna Efficiency ... 10
6 EVB Reference Schematics ... 11
7 WL1837MODCOM8I Layer 1 Layout ... 13
8 WL1837MODCOM8I Layer 2 Layout ... 13
9 WL1837MODCOM8I Layer 3 Layout ... 14
10 WL1837MODCOM8I Layer 4 Layout ... 14

Sitara, WiLink are trademarks of Texas Instruments.
Bluetooth is a registered trademark of Bluetooth SIG, Inc.
Android is a trademark of Google, Inc.
Linux is a registered trademark of Linus Torvalds.
Wi-Fi is a registered trademark of Wi-Fi Alliance.

Copyright © 2014, Texas Instruments Incorporated

11 Module Layout Guidelines (Top Layer) 15
12 Module Layout Guidelines (Bottom Layer) 15
13 Trace Design for the PCB Layout 16
14 Layer 1 Combined With Layer 2 16
15 Top Layer – Antenna and RF Trace Routing Layout Guidelines 17
16 Bottom Layer – Antenna and RF Trace Routing Layout Guidelines 17
17 MIMO Antenna Spacing 18

List of Tables

1 Pin Description 5
2 Approved Antenna Types and Maximum Gain Values 8
3 BOM 12
4 Module Layout Guidelines 15
5 Antenna and RF Trace Routing Layout Guidelines 17

Warning

The WL1837MODCOM8I board is tested to comply with ETSI/R&TTE over temperatures from –40°C to +85°C.

This board should not be modified to operate in other frequency bands other than what they are designed for.

FCC Licensing Requirements for the Wi-Fi and Bluetooth Radio Module of the EVM:

For evaluation only; not FCC approved for resale. This kit is designed to allow:

1. Product developers to evaluate electronic components, circuitry, or software associated with the kit to determine whether to incorporate such items in a finished product
2. Software developers to write software applications for use with the end product. This kit is not a finished product and when assembled may not be resold or otherwise marketed unless all required FCC equipment authorizations are first obtained. Operation is subject to the condition that this product not cause harmful interference to licensed radio stations and that this product accept harmful interference. Unless the assembled kit is designed to operate under part 15, part 18, or part 95 of this chapter, the operator of the kit must operate under the authority of an FCC license holder or must secure an experimental authorization under part 5 of this chapter.

Per TI's Regulatory Compliance Information located in the WL1837MODCOM8I User's Guide's "Evaluation Board/Kit/Module (EVM) Additional Terms," this EVM cannot be used for production purposes and is explicitly restricted from end-product introduction.

Use of this EVM requires the developer to provide a minimum distance of at least 20 cm from the antenna to all persons in order to minimize risk of potential radiation hazards.

CAUTION

Do not leave the EVM powered when unattended.

Copyright © 2014, Texas Instruments Incorporated

1 Overview

Figure 1 shows the WL1837MODCOM8I EVB.

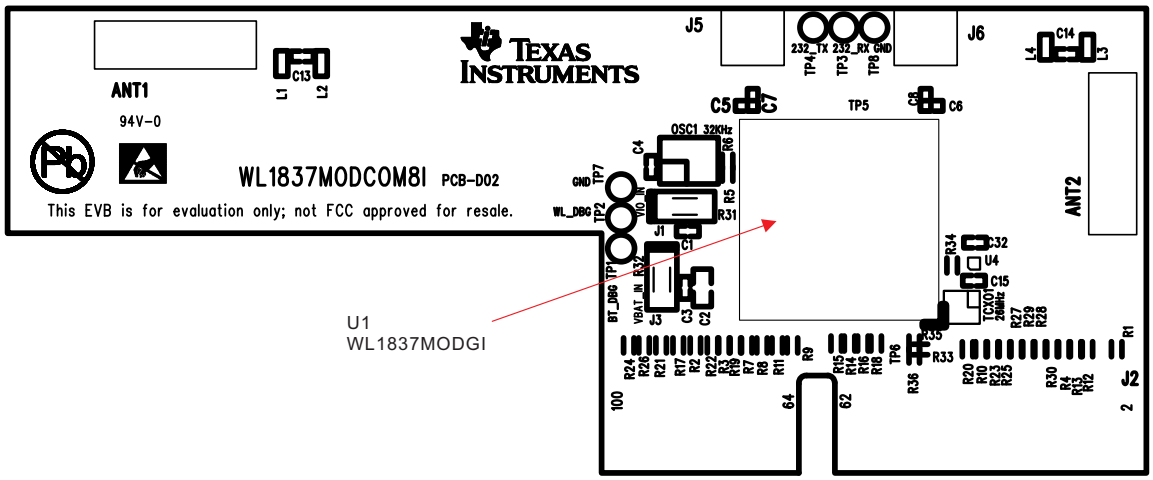

Figure 1. WL1837MODCOM8I EVB (Top View)

1.1 General Features

The WL1837MODCOM8I EVB includes the following features:

- WLAN, *Bluetooth*, and BLE on a single module board
- 100-pin board card
- Dimensions: 76.0 mm (L) x 31.0 mm (W)
- WLAN 2.4- and 5-GHz SISO (20- and 40-MHz channels), 2.4-GHz MIMO (20-MHz channels)
- Support for BLE dual mode
- Seamless integration with TI Sitara and other application processors
- Design for the TI AM335X general-purpose evaluation module (EVM)
- WLAN and *Bluetooth*, BLE, and ANT cores that are software- and hardware-compatible with prior WL127x, WL128x, and BL6450 offerings for smooth migration to device
- Shared host-controller-interface (HCI) transport for *Bluetooth*, BLE, and ANT using UART and SDIO for WLAN
- Wi-Fi and *Bluetooth* single-antenna coexistence
- Built-in chip antenna
- Optional U.FL RF connector for external antenna
- Direct connection to the battery using an external switched-mode power supply (SMPS) supporting 2.9- to 4.8-V operation
- V_{IO} in the 1.8-V domain

1.2 Key Benefits

The WL18x7MOD offers the following benefits:

- Reduces design overhead: Single WiLink 8 module scales across Wi-Fi and *Bluetooth*
- WLAN high throughput: 80 Mbps (TCP), 100 Mbps (UDP)
- *Bluetooth* 4.1 + BLE (Smart Ready)
- Wi-Fi and *Bluetooth* single-antenna coexistence
- Low power at 30% to 50% less than the previous generation
- Available as an easy-to-use FCC-, ETSI-, and Telec-certified module

Copyright © 2014, Texas Instruments Incorporated

- Lower manufacturing costs saves board space and minimizes RF expertise.
- AM335x Linux and Android reference platform accelerates customer development and time to market.

1.3 Applications

The WL1837MODCOM8I device is designed for the following applications:

- Portable consumer devices
- Home electronics
- Home appliances and white goods
- Industrial and home automation
- Smart gateway and metering
- Video conferencing
- Video camera and security

2 Board Pin Assignment

Figure 2 shows the top view of the EVB.

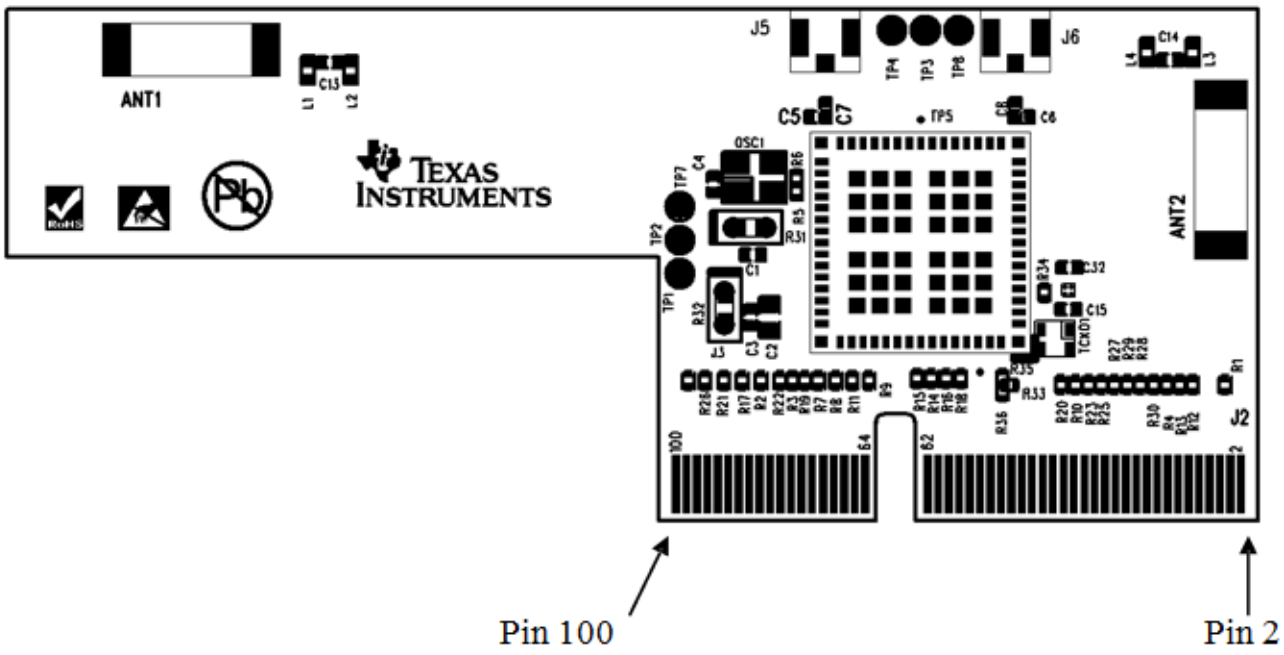

Figure 2. EVB Top View

Copyright © 2014, Texas Instruments Incorporated

Figure 3 shows the bottom view of the EVB.

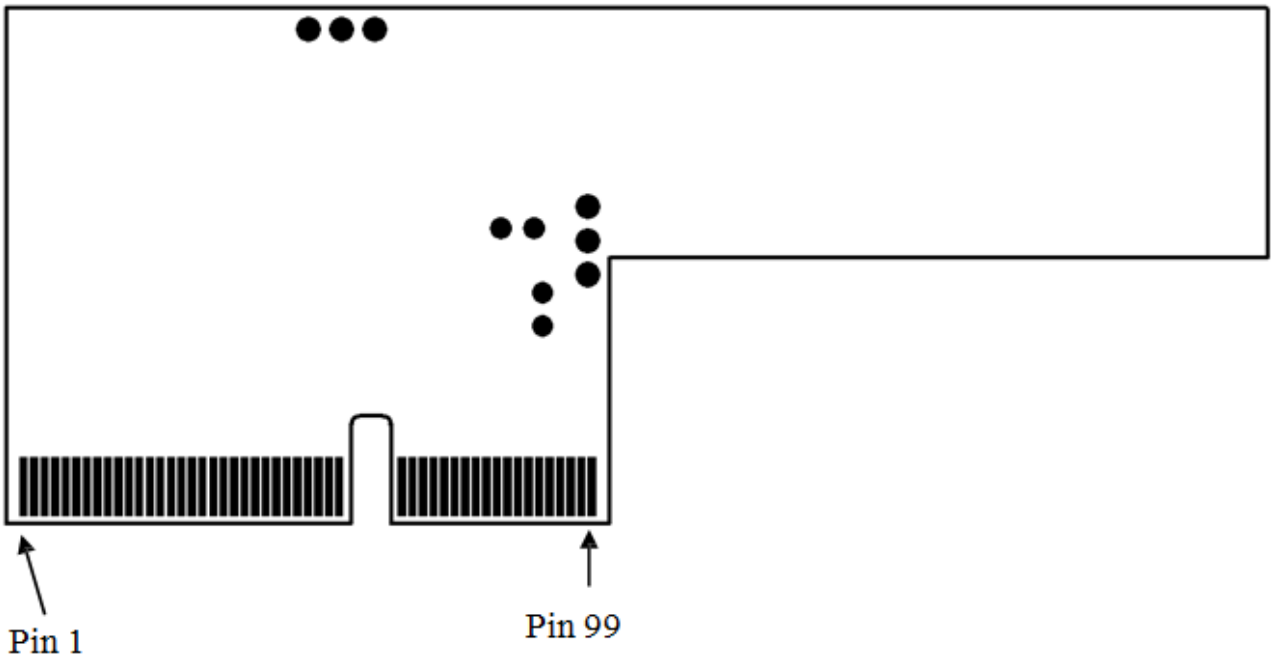

Figure 3. EVB (Bottom View)

2.1 Pin Description

Table 1 describes the board pins.

Table 1. Pin Description

No.	Name	Type	Description
1	SLOW_CLK	I	Slow clock input option (default: NU)
2	GND	G	Ground
3	GND	G	Ground
4	WL_EN	I	WLAN enable
5	V_{BAT}	P	3.6-V typical voltage input
6	GND	G	Ground
7	V_{BAT}	P	3.6-V typical voltage input
8	V_{IO}	P	V_{IO} 1.8-V (I/O voltage) input
9	GND	G	Ground
10	N.C.		No connection
11	WL_RS232_TX	O	WLAN tool RS232 output
12	N.C.		No connection
13	WL_RS232_RX	I	WLAN tool RS232 input
14	N.C.		No connection
15	WL_UART_DBG	O	WLAN Logger output
16	N.C.		No connection
17	N.C.		No connection
18	GND	G	Ground
19	GND	G	Ground
20	SDIO_CLK	I	WLAN SDIO clock

Copyright © 2014, Texas Instruments Incorporated

Table 1. Pin Description (continued)

No.	Name	Type	Description
21	N.C.		No connection
22	GND	G	Ground
23	N.C.		No connection
24	SDIO_CMD	I/O	WLAN SDIO command
25	N.C.		No connection
26	SDIO_D0	I/O	WLAN SDIO data bit 0
27	N.C.		No connection
28	SDIO_D1	I/O	WLAN SDIO data bit 1
29	N.C.		No connection
30	SDIO_D2	I/O	WLAN SDIO data bit 2
31	N.C.		No connection
32	SDIO_D3	I/O	WLAN SDIO data bit 3
33	N.C.		No connection
34	WLAN_IRQ	O	WLAN SDIO interrupt out
35	N.C.		No connection
36	N.C.		No connection
37	GND	G	Ground
38	N.C.		No connection
39	N.C.		No connection
40	N.C.		No connection
41	N.C.		No connection
42	GND	G	Ground
43	N.C.		No connection
44	N.C.		No connection
45	N.C.		No connection
46	N.C.		No connection
47	GND	G	Ground
48	N.C.		No connection
49	N.C.		No connection
50	N.C.		No connection
51	N.C.		No connection
52	PCM_IF_CLK	I/O	*Bluetooth* PCM clock input or output
53	N.C.		No connection
54	PCM_IF_FSYNC	I/O	*Bluetooth* PCM frame sync input or output
55	N.C.		No connection
56	PCM_IF_DIN	I	*Bluetooth* PCM data input
57	N.C.		No connection
58	PCM_IF_DOUT	O	*Bluetooth* PCM data output
59	N.C.		No connection
60	GND	G	Ground
61	N.C.		No connection
62	N.C.		No connection
63	GND	G	Ground
64	GND	G	Ground
65	N.C.		No connection
66	BT_UART_IF_TX	O	*Bluetooth* HCI UART transmit output
67	N.C.		No connection

Copyright © 2014, Texas Instruments Incorporated

Table 1. Pin Description (continued)

No.	Name	Type	Description
68	BT_UART_IF_RX	I	*Bluetooth* HCI UART receive input
69	N.C.		No connection
70	BT_UART_IF_CTS	I	*Bluetooth* HCI UART Clear-to-Send input
71	N.C.		No connection
72	BT_UART_IF_RTS	O	*Bluetooth* HCI UART Request-to-Send output
73	N.C.		No connection
74	RESERVED1	O	Reserved
75	N.C.		No connection
76	BT_UART_DEBUG	O	*Bluetooth* Logger UART output
77	GND	G	Ground
78	GPIO9	I/O	General-purpose I/O
79	N.C.		No connection
80	N.C.		No connection
81	N.C.		No connection
82	N.C.		No connection
83	GND	G	Ground
84	N.C.		No connection
85	N.C.		No connection
86	N.C.		No connection
87	GND	G	Ground
88	N.C.		No connection
89	BT_EN	I	*Bluetooth* enable
90	N.C.		No connection
91	N.C.		No connection
92	GND	G	Ground
93	RESERVED2	I	Reserved
94	N.C.		No connection
95	GND	G	Ground
96	GPIO11	I/O	General-purpose I/O
97	GND	G	Ground
98	GPIO12	I/O	General-purpose I/O
99	TCXO_CLK_COM	I	Option to supply 26 MHz externally
100	GPIO10	I/O	General-purpose I/O

2.2 Jumper Connections

The WL1837MODCOM8I EVB includes the following jumper connections:

- J1: Jumper connector for V_{IO} power input
- J3: Jumper connector for V_{BAT} power input
- J5: RF connector for 2.4- and 5-GHz WLAN and *Bluetooth*
- J6: Second RF connector for 2.4-GHz WLAN

3 Electrical Characteristics

For electrical characteristics, see the *WL18xxMOD WiLink™ Single-Band Combo Module – Wi-Fi®, Bluetooth®, and Bluetooth Low Energy (BLE) Data Sheet* (SWRS170).

Copyright © 2014, Texas Instruments Incorporated

4 Approved Antenna Types and Maximum Gain Values

This device is intended only for OEM integrators under the following conditions:

- The antenna must be installed so that 20 cm is maintained between the antenna and users.
- The transmitter module cannot be co-located with any other transmitter or antenna.
- The radio transmitter can operate only using an antenna of a type and maximum (or lesser) gain approved by TI. Table 2 lists the antennas approved by TI for use with the radio transmitter along with maximum allowable gain values. Antenna types not included in the list or having a gain greater than the maximum indicated are strictly prohibited for use with this transmitter.

Table 2. Approved Antenna Types and Maximum Gain Values

Antenna Type	Brand	2.4 GHz	4.9 to 5.9 GHz[1]	Unit
PCB	Ethertronics	–0.600	4.50	dBi
Dipole	LSR	2.00	2.00	
PCB	Laird	2.00	4.00	
Chip	Pulse	3.20	4.20	
PIFA	LSR	2.00	3.00	
Chip	TDK	2.27	3.96	

(1) Range is approximate.

NOTE: If these conditions cannot be met (for example, with certain laptop configurations or co-location with another transmitter), the FCC/IC authorization will not be considered valid and the FCC ID/IC ID cannot be used on the final product. In these circumstances, the OEM integrator is responsible for reevaluating the end product (including the transmitter) and obtaining a separate FCC/IC authorization.

Copyright © 2014, Texas Instruments Incorporated

5 Antenna Characteristics

5.1 VSWR

Figure 4 shows the antenna VSWR characteristics.

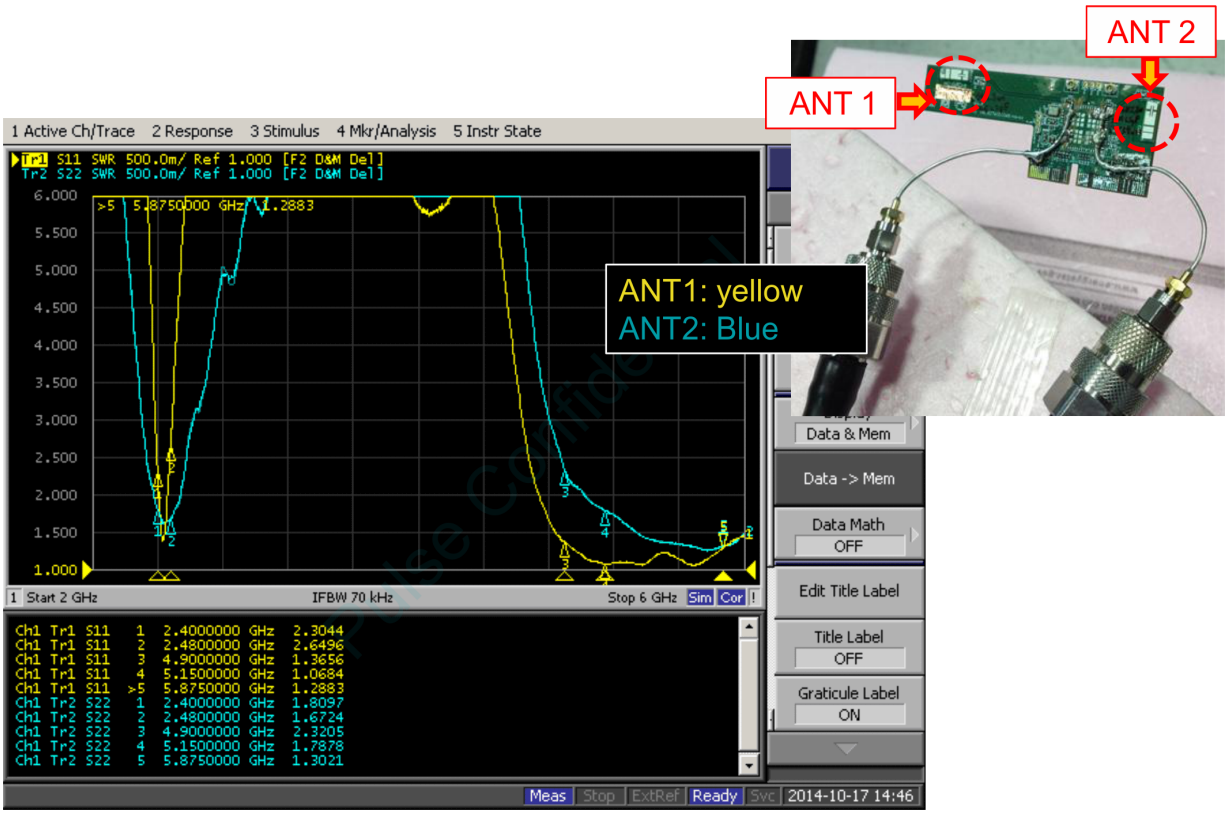

Figure 4. Antenna VSWR Characteristics

Copyright © 2014, Texas Instruments Incorporated

5.2 Efficiency

Figure 5 shows the antenna efficiency.

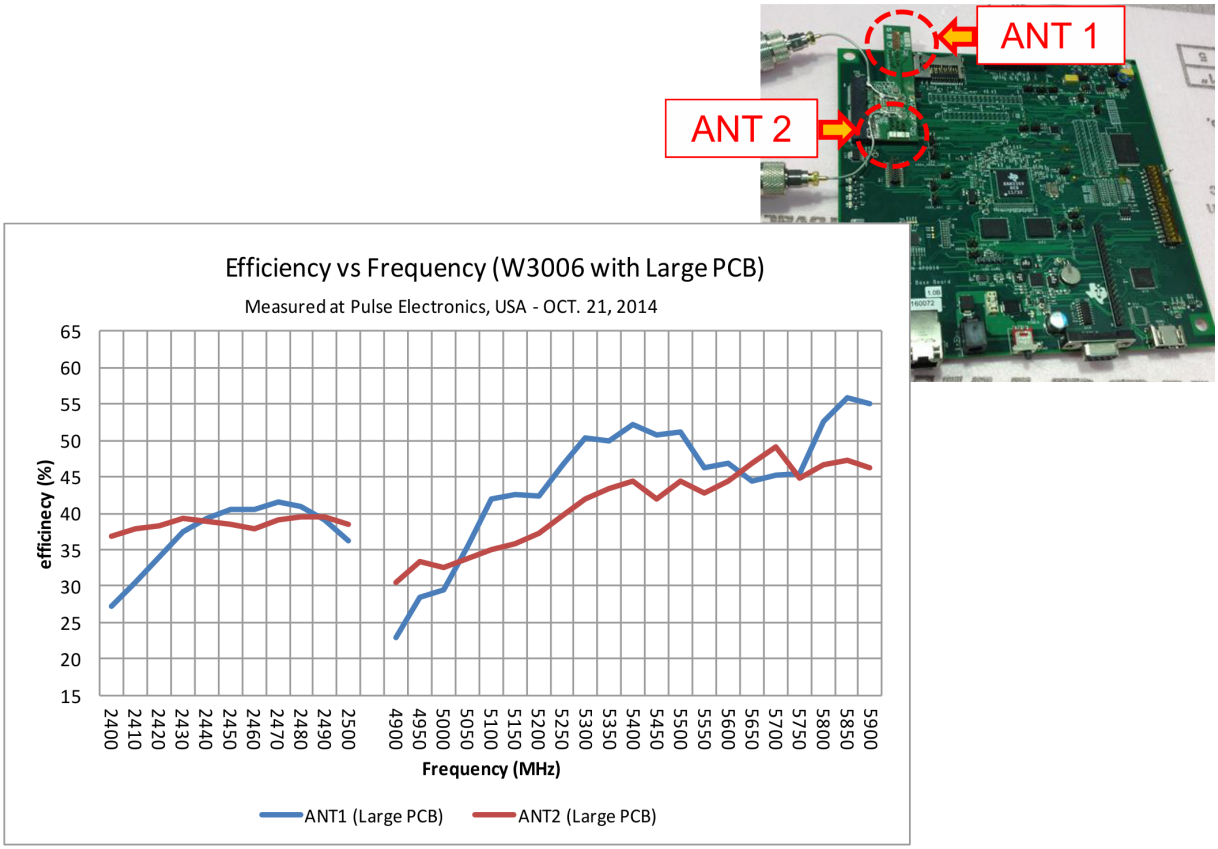

Figure 5. Antenna Efficiency

5.3 Radio Pattern

For information on the antenna radio pattern and other related information, see productfinder.pulseeng.com/product/W3006.

Copyright © 2014, Texas Instruments Incorporated

6 Circuit Design

6.1 EVB Reference Schematics

Figure 6 shows the reference schematics for the EVB.

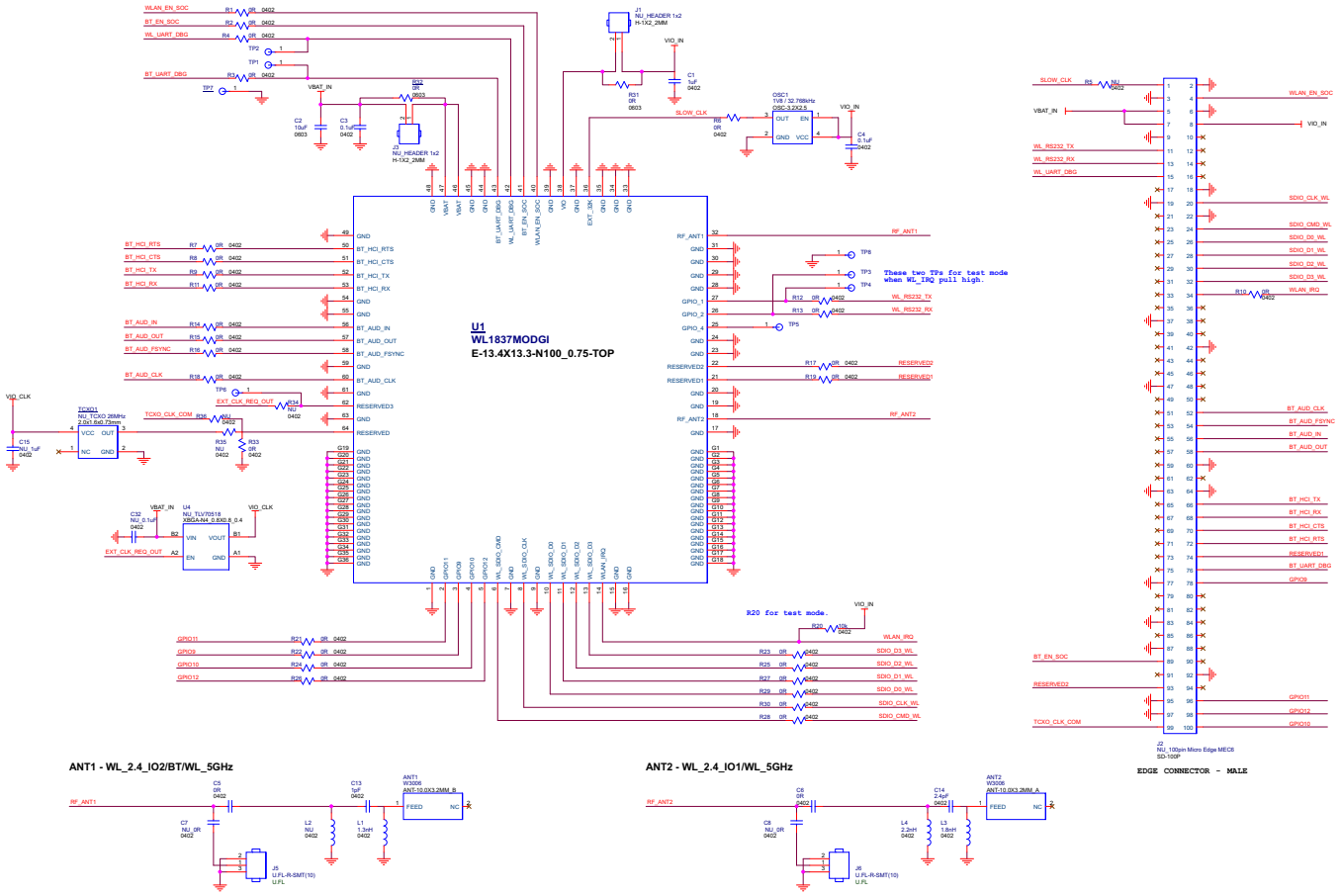

Figure 6. EVB Reference Schematics

Copyright © 2014, Texas Instruments Incorporated

6.2 Bill of Materials (BOM)

Table 3 lists the BOM for the EVB.

Table 3. BOM

Item	Description	Part Number	Package	Reference	Qty	Mfr
1	TI WL1837 Wi-Fi / *Bluetooth* module	WL1837MODGI	13.4 mm x 13.3 mm x 2.0 mm	U1	1	Jorjin
2	XOSC 3225 / 32.768KHZ / 1.8 V / ±50 ppm	7XZ3200005	3.2 mm × 2.5 mm × 1.0 mm	OSC1	1	TXC
3	Antenna / Chip / 2.4 and 5 GHz	W3006	10.0 mm × 3.2 mm × 1.5 mm	ANT1, ANT2	2	Pulse
4	Mini RF header receptacle	U.FL-R-SMT-1(10)	3.0 mm × 2.6 mm × 1.25 mm	J5, J6	2	Hirose
5	Inductor 0402 / 1.3 nH / ±0.1 nH / SMD	LQP15MN1N3B02	0402	L1	1	Murata
6	Inductor 0402 / 1.8 nH / ±0.1 nH / SMD	LQP15MN1N8B02	0402	L3	1	Murata
7	Inductor 0402 / 2.2 nH / ±0.1 nH / SMD	LQP15MN2N2B02	0402	L4	1	Murata
8	Capacitor 0402 / 1 pF / 50 V / C0G / ±0.1 pF	GJM1555C1H1R0BB01	0402	C13	1	Murata
9	Capacitor 0402 / 2.4 pF / 50 V / C0G / ±0.1 pF	GJM1555C1H2R4BB01	0402	C14	1	Murata
10	Capacitor 0402 / 0.1 µF / 10 V / X7R / ±10%	0402B104K100CT	0402	C3, C4	2	Walsin
11	Capacitor 0402 / 1 µF / 6.3 V / X5R / ±10% / HF	GRM155R60J105KE19D	0402	C1	1	Murata
12	Capacitor 0603 / 10 µF / 6.3 V / X5R / ±20%	C1608X5R0J106M	0603	C2	1	TDK
13	Resistor 0402 / 0R / ±5%	WR04X000 PTL	0402	R1 to R4, R6 to R19, R21 to R30, R33, C5, C6(1)	31	Walsin
14	Resistor 0402 / 10K / ±5%	WR04X103 JTL	0402	R20	1	Walsin
15	Resistor 0603 / 0R / ±5%	WR06X000 PTL	0603	R31, R32	2	Walsin

(1) C5 and C6 are mounted with a 0-Ω resistor by default.

Copyright © 2014, Texas Instruments Incorporated

7 Layout Guidelines

7.1 Board Layout

Figure 7 through Figure 10 show the four layers of the WL1837MODCOM8I EVB.

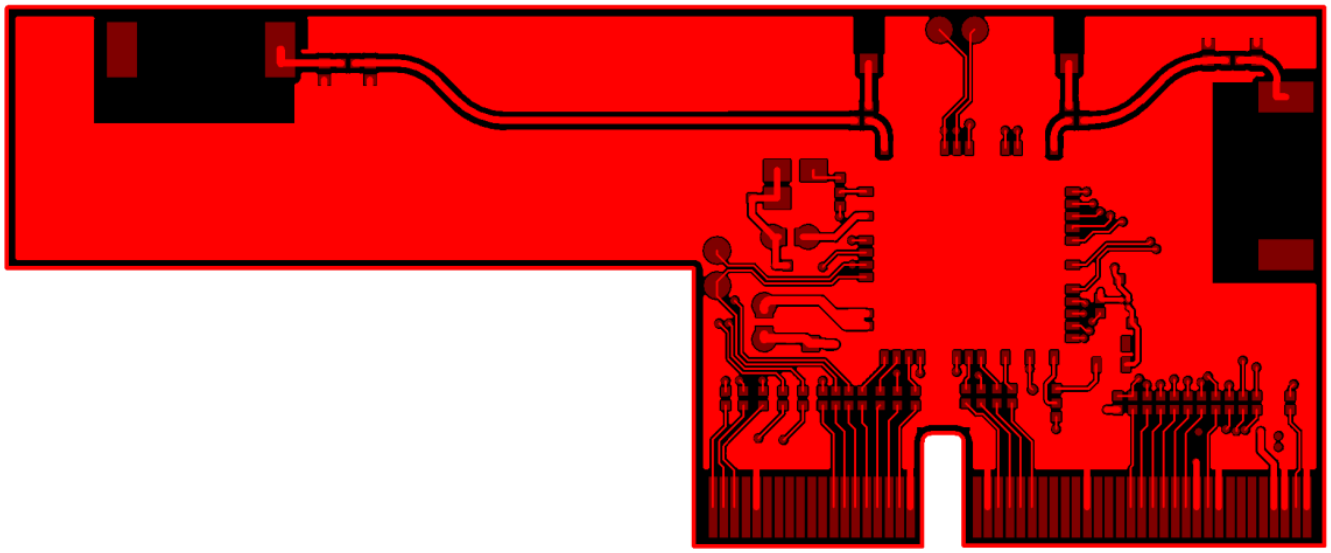

Figure 7. WL1837MODCOM8I Layer 1 Layout

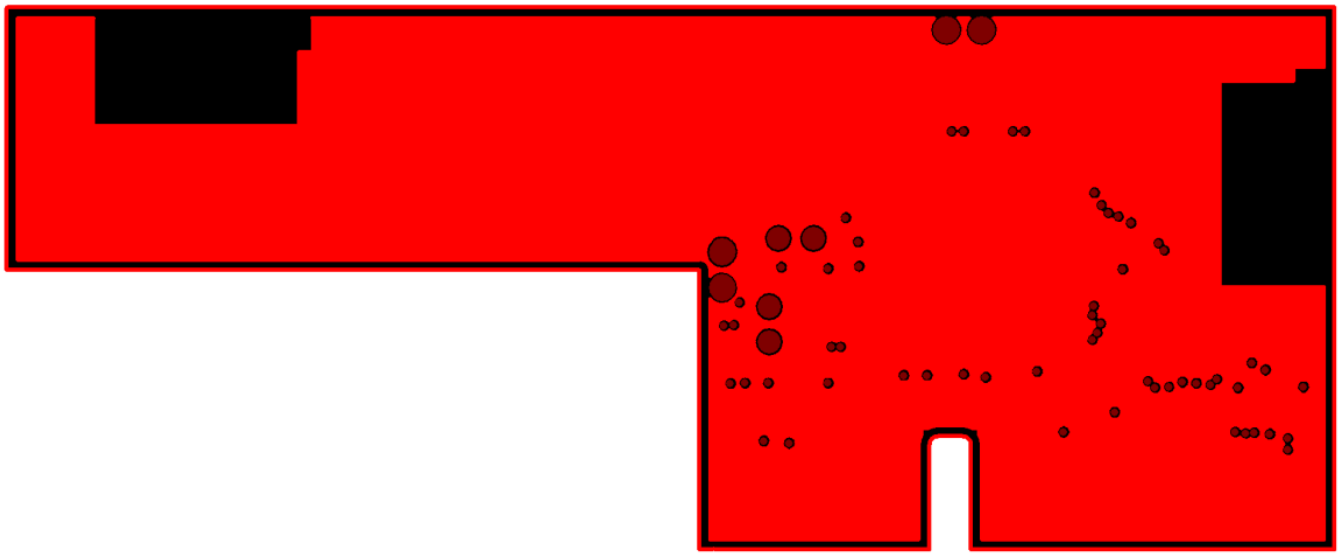

Figure 8. WL1837MODCOM8I Layer 2 Layout

Copyright © 2014, Texas Instruments Incorporated

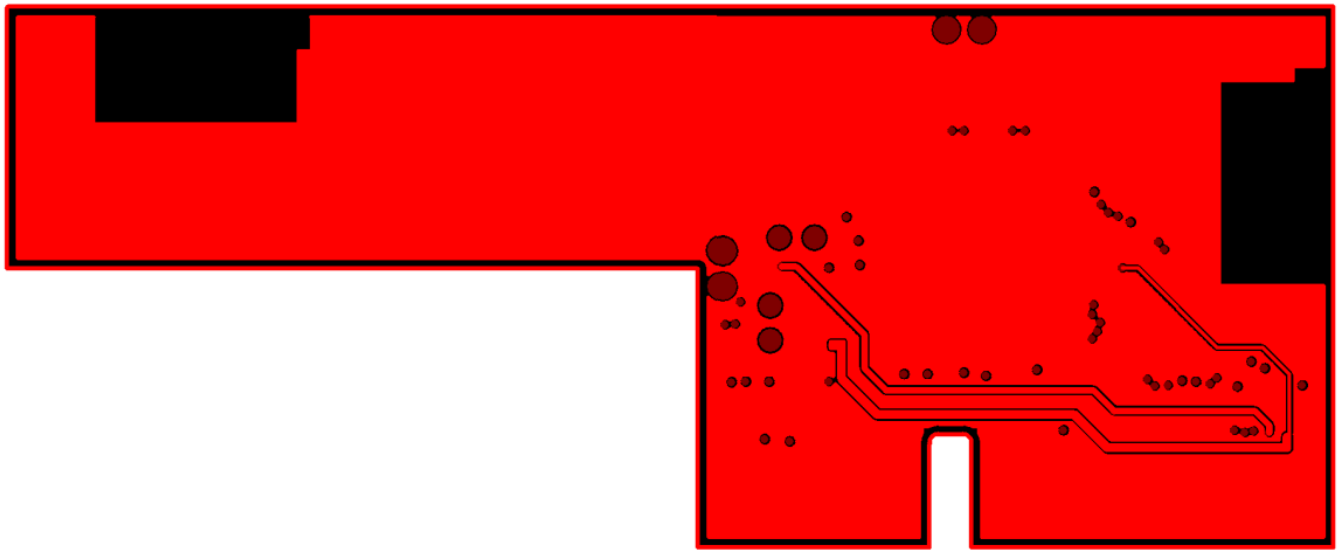

Figure 9. WL1837MODCOM8I Layer 3 Layout

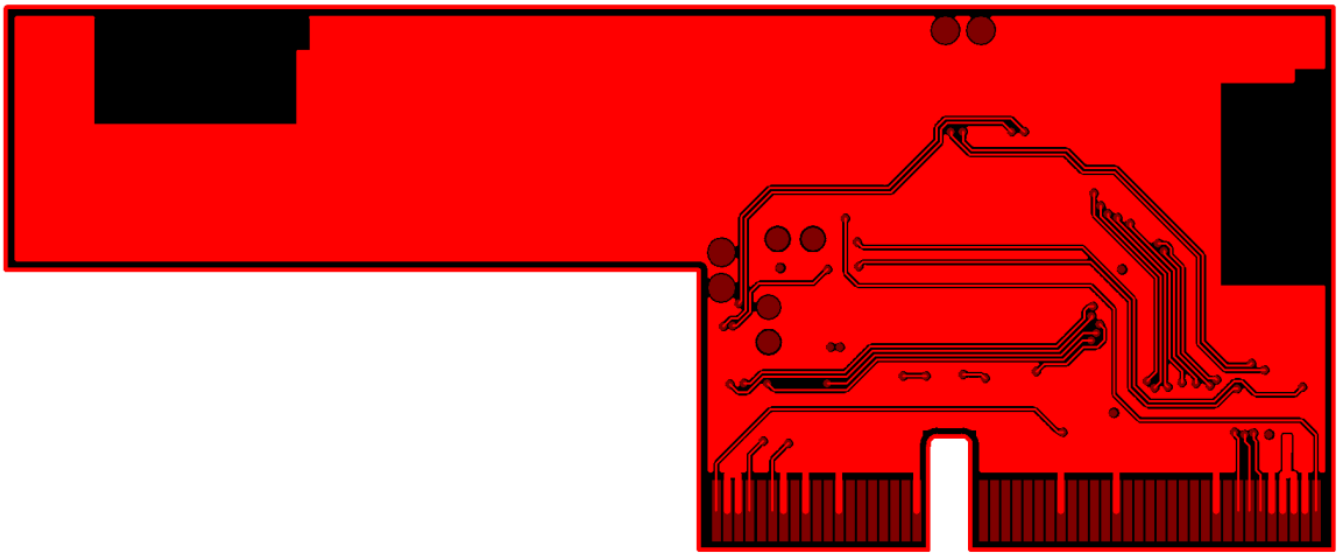

Figure 10. WL1837MODCOM8I Layer 4 Layout

Figure 11 and Figure 12 show instances of good layout practices.

Copyright © 2014, Texas Instruments Incorporated

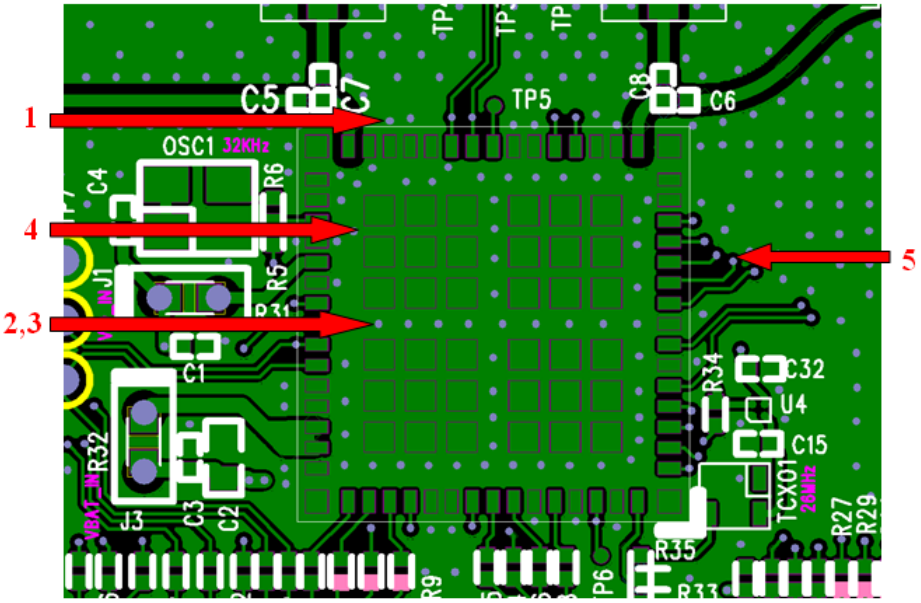

Figure 11. Module Layout Guidelines (Top Layer)

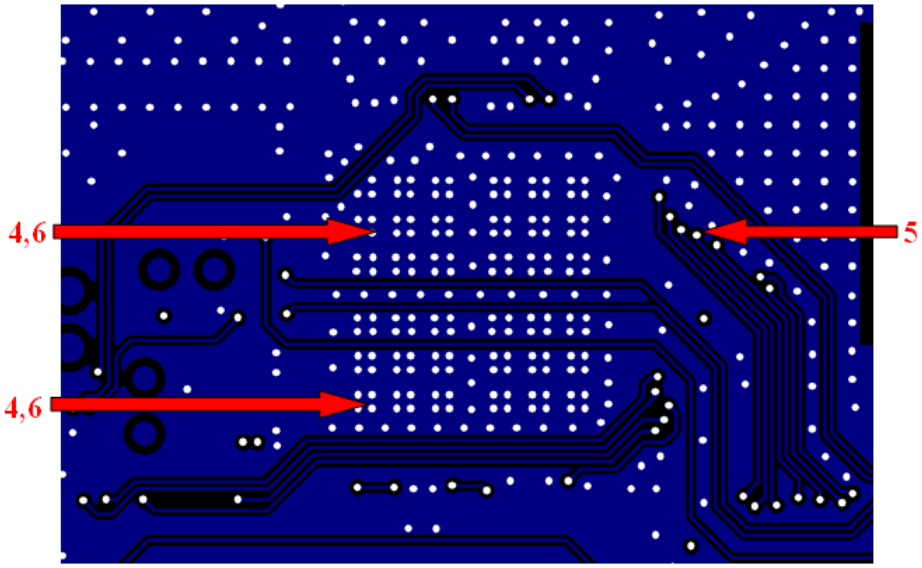

Figure 12. Module Layout Guidelines (Bottom Layer)

Table 4 describes the guidelines corresponding to the reference numbers in Figure 11 and Figure 12.

Table 4. Module Layout Guidelines

Reference	Guideline Description
1	Keep the proximity of ground vias close to the pad.
2	Do not run signal traces underneath the module on the layer where the module is mounted.
3	Have a complete ground pour in layer 2 for thermal dissipation.
4	Ensure a solid ground plane and ground vias under the module for stable system and thermal dissipation.
5	Increase ground pour in the first layer and have all traces from the first layer on the inner layers, if possible.
6	Signal traces can be run on a third layer under the solid ground layer and the module mounting layer.

Copyright © 2014, Texas Instruments Incorporated

Figure 13 shows the trace design for the PCB. TI recommends using a 50-Ω impedance match on the trace to the antenna and 50-Ω traces for the PCB layout.

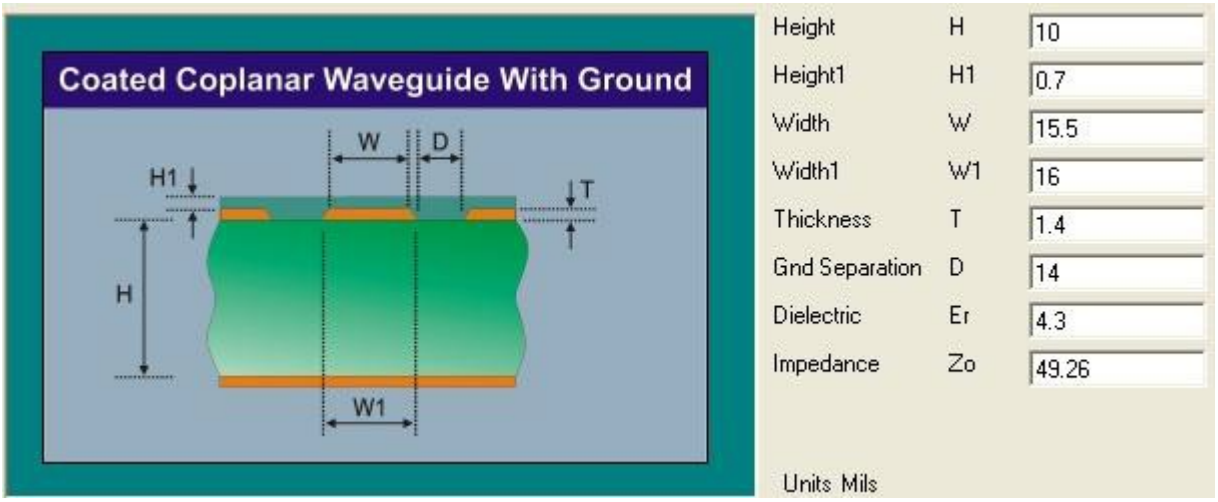

Figure 13. Trace Design for the PCB Layout

Figure 14 shows layer 1 with the trace to the antenna over ground layer 2.

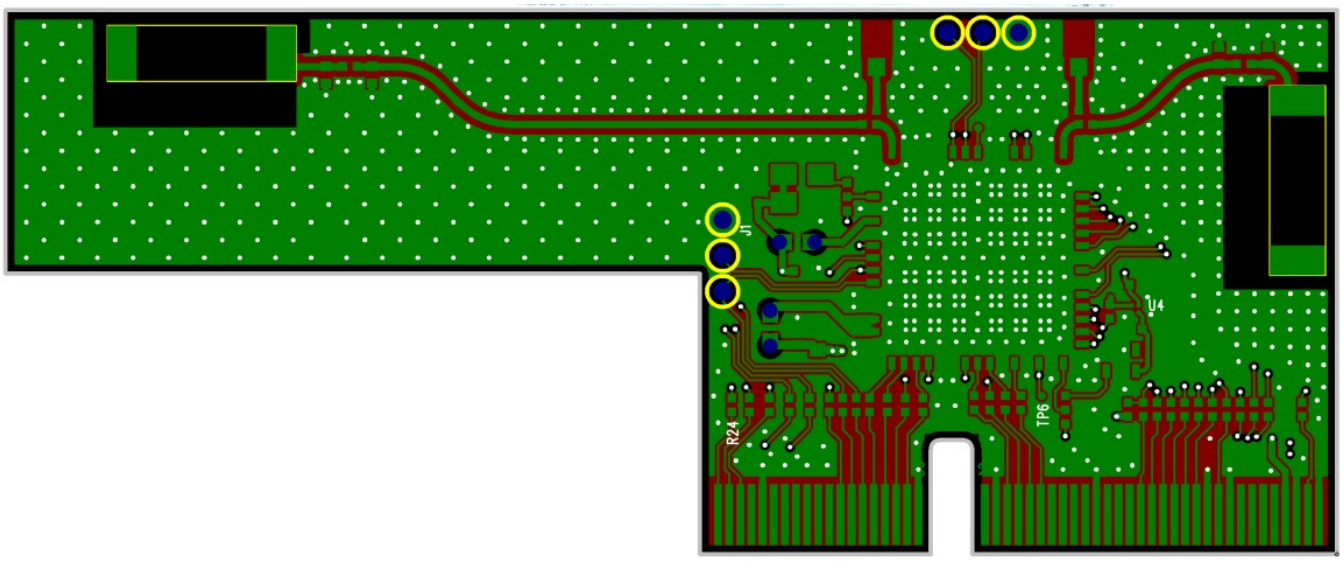

Figure 14. Layer 1 Combined With Layer 2

Figure 15 and Figure 16 show instances of good layout practices for the antenna and RF trace routing.

NOTE: RF traces must be as short as possible. The antenna, RF traces, and modules must be on the edge of the PCB product. The proximity of the antenna to the enclosure and the enclosure material must also be considered.

Copyright © 2014, Texas Instruments Incorporated

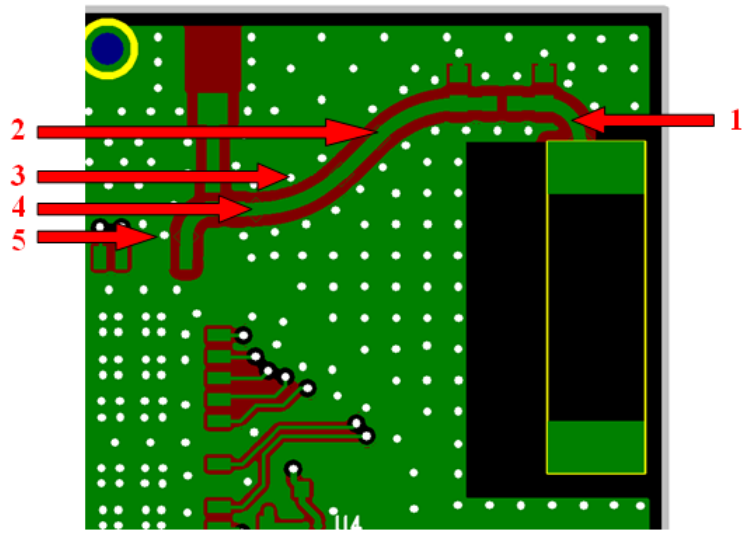

Figure 15. Top Layer – Antenna and RF Trace Routing Layout Guidelines

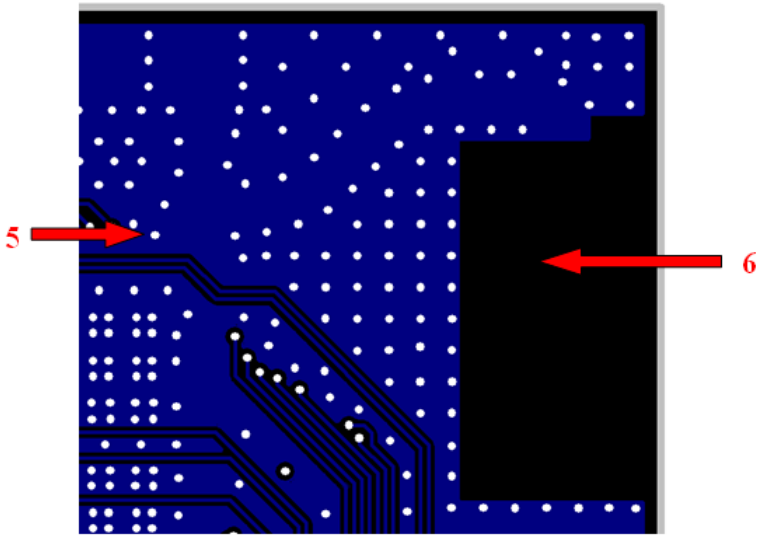

Figure 16. Bottom Layer – Antenna and RF Trace Routing Layout Guidelines

Table 5 describes the guidelines corresponding to the reference numbers in Figure 15 and Figure 16.

Table 5. Antenna and RF Trace Routing Layout Guidelines

Reference	Guideline Description
1	The RF trace antenna feed must be as short as possible beyond the ground reference. At this point, the trace starts to radiate.
2	RF trace bends must be gradual with an approximate maximum bend of 45 degrees with trace mitered. RF traces must not have sharp corners.
3	RF traces must have via stitching on the ground plane beside the RF trace on both sides.
4	RF traces must have constant impedance (microstrip transmission line).
5	For best results, the RF trace ground layer must be the ground layer immediately below the RF trace. The ground layer must be solid.
6	There must be no traces or ground under the antenna section.

Copyright © 2014, Texas Instruments Incorporated

Figure 17 shows the MIMO antenna spacing. The distance between ANT1 and ANT2 must be greater than half the wavelength (62.5 mm at 2.4 GHz).

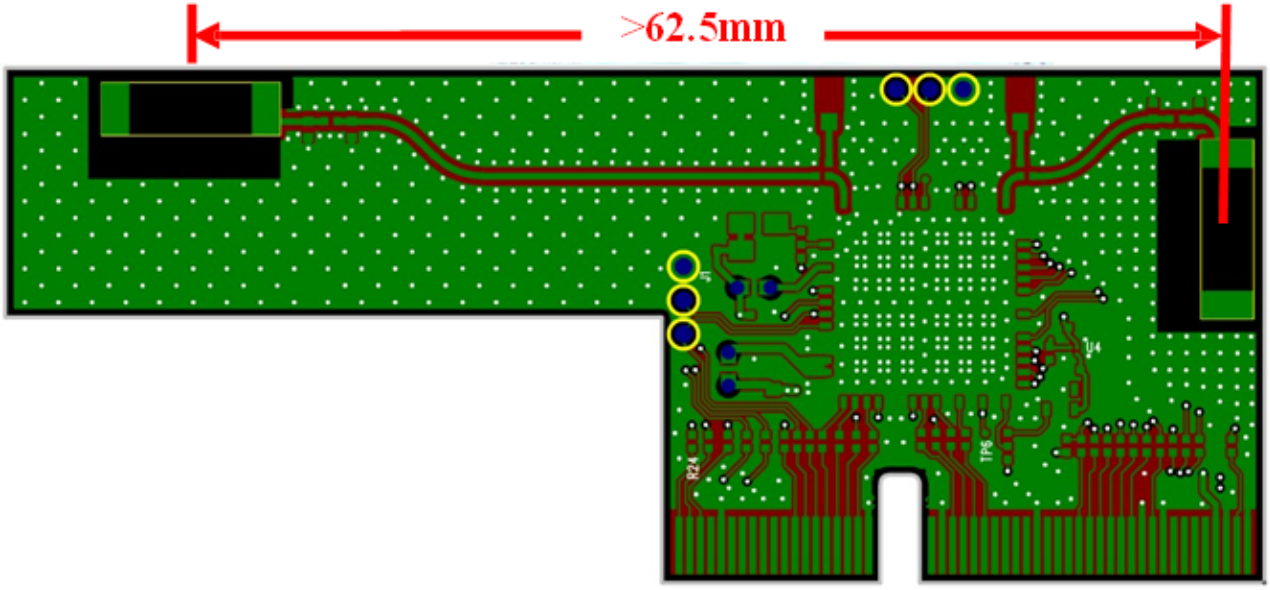

Figure 17. MIMO Antenna Spacing

Follow these supply routing guidelines:

- For power supply routing, the power trace for V_{BAT} must be at least 40-mil wide.
- The 1.8-V trace must be at least 18-mil wide.
- Make V_{BAT} traces as wide as possible to ensure reduced inductance and trace resistance.
- If possible, shield V_{BAT} traces with ground above, below, and beside the traces.

Follow these digital-signal routing guidelines:

- Route SDIO signal traces (CLK, CMD, D0, D1, D2, and D3) in parallel to each other and as short as possible (less than 12 cm). In addition, each trace must be the same length. Ensure enough space between traces (greater than 1.5 times the trace width or ground) to ensure signal quality, especially for the SDIO_CLK trace. Remember to keep these traces away from the other digital or analog signal traces. TI recommends adding ground shielding around these buses.
- Digital clock signals (SDIO clock, PCM clock, and so on) are a source of noise. Keep the traces of these signals as short as possible. Whenever possible, maintain a clearance around these signals.

8 Ordering Information

Part number:	WL1837MODCOM8I

Revision History

Changes from Original (November 2014) to A Revision **Page**

- Added WL1807MOD in abstract 1
- Added Warning 2
- Changed EVB in Figure 1 3
- Added input type to pin 99 in Table 1 7
- Added Section 4, *Approved Antennas and Maximum Gain Values* 8
- Changed EVB reference schematics in Figure 6 11

Copyright © 2014, Texas Instruments Incorporated

- Deleted item 16 (PCB) in Table 3 12

Copyright © 2014, Texas Instruments Incorporated

IMPORTANT NOTICE

Texas Instruments Incorporated and its subsidiaries (TI) reserve the right to make corrections, enhancements, improvements and other changes to its semiconductor products and services per JESD46, latest issue, and to discontinue any product or service per JESD48, latest issue. Buyers should obtain the latest relevant information before placing orders and should verify that such information is current and complete. All semiconductor products (also referred to herein as “components”) are sold subject to TI’s terms and conditions of sale supplied at the time of order acknowledgment.

TI warrants performance of its components to the specifications applicable at the time of sale, in accordance with the warranty in TI’s terms and conditions of sale of semiconductor products. Testing and other quality control techniques are used to the extent TI deems necessary to support this warranty. Except where mandated by applicable law, testing of all parameters of each component is not necessarily performed.

TI assumes no liability for applications assistance or the design of Buyers’ products. Buyers are responsible for their products and applications using TI components. To minimize the risks associated with Buyers’ products and applications, Buyers should provide adequate design and operating safeguards.

TI does not warrant or represent that any license, either express or implied, is granted under any patent right, copyright, mask work right, or other intellectual property right relating to any combination, machine, or process in which TI components or services are used. Information published by TI regarding third-party products or services does not constitute a license to use such products or services or a warranty or endorsement thereof. Use of such information may require a license from a third party under the patents or other intellectual property of the third party, or a license from TI under the patents or other intellectual property of TI.

Reproduction of significant portions of TI information in TI data books or data sheets is permissible only if reproduction is without alteration and is accompanied by all associated warranties, conditions, limitations, and notices. TI is not responsible or liable for such altered documentation. Information of third parties may be subject to additional restrictions.

Resale of TI components or services with statements different from or beyond the parameters stated by TI for that component or service voids all express and any implied warranties for the associated TI component or service and is an unfair and deceptive business practice. TI is not responsible or liable for any such statements.

Buyer acknowledges and agrees that it is solely responsible for compliance with all legal, regulatory and safety-related requirements concerning its products, and any use of TI components in its applications, notwithstanding any applications-related information or support that may be provided by TI. Buyer represents and agrees that it has all the necessary expertise to create and implement safeguards which anticipate dangerous consequences of failures, monitor failures and their consequences, lessen the likelihood of failures that might cause harm and take appropriate remedial actions. Buyer will fully indemnify TI and its representatives against any damages arising out of the use of any TI components in safety-critical applications.

In some cases, TI components may be promoted specifically to facilitate safety-related applications. With such components, TI’s goal is to help enable customers to design and create their own end-product solutions that meet applicable functional safety standards and requirements. Nonetheless, such components are subject to these terms.

No TI components are authorized for use in FDA Class III (or similar life-critical medical equipment) unless authorized officers of the parties have executed a special agreement specifically governing such use.

Only those TI components which TI has specifically designated as military grade or “enhanced plastic” are designed and intended for use in military/aerospace applications or environments. Buyer acknowledges and agrees that any military or aerospace use of TI components which have ***not*** been so designated is solely at the Buyer's risk, and that Buyer is solely responsible for compliance with all legal and regulatory requirements in connection with such use.

TI has specifically designated certain components as meeting ISO/TS16949 requirements, mainly for automotive use. In any case of use of non-designated products, TI will not be responsible for any failure to meet ISO/TS16949.

Products		**Applications**	
Audio	www.ti.com/audio	Automotive and Transportation	www.ti.com/automotive
Amplifiers	amplifier.ti.com	Communications and Telecom	www.ti.com/communications
Data Converters	dataconverter.ti.com	Computers and Peripherals	www.ti.com/computers
DLP® Products	www.dlp.com	Consumer Electronics	www.ti.com/consumer-apps
DSP	dsp.ti.com	Energy and Lighting	www.ti.com/energy
Clocks and Timers	www.ti.com/clocks	Industrial	www.ti.com/industrial
Interface	interface.ti.com	Medical	www.ti.com/medical
Logic	logic.ti.com	Security	www.ti.com/security
Power Mgmt	power.ti.com	Space, Avionics and Defense	www.ti.com/space-avionics-defense
Microcontrollers	microcontroller.ti.com	Video and Imaging	www.ti.com/video
RFID	www.ti-rfid.com		
OMAP Applications Processors	www.ti.com/omap	**TI E2E Community**	e2e.ti.com
Wireless Connectivity	www.ti.com/wirelessconnectivity		

Mailing Address: Texas Instruments, Post Office Box 655303, Dallas, Texas 75265
Copyright © 2014, Texas Instruments Incorporated