


## Model number

**WCS3B-LS410**

## Features

- CANopen interface
- Non-contact, absolute position encoder
- Automatic detection of dirt accumulation
- Output of position and speed

## Accessories

**WCS3B-PL2**
Transparent protective case and seal for WCS3B reader

**WCS-MP1**
Mounting plate for reading heads WCS2 and WCS3

## Dimensions

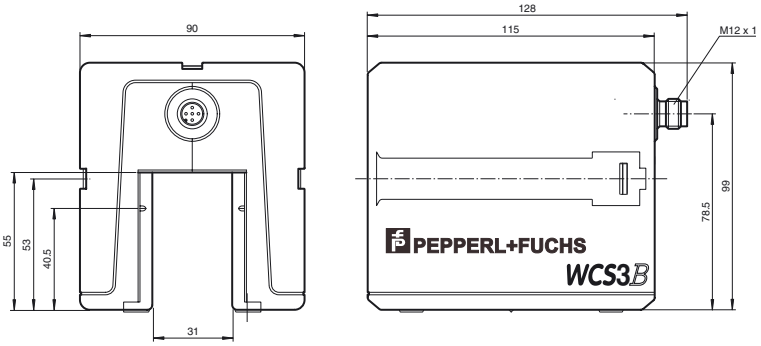


## Mounting plate

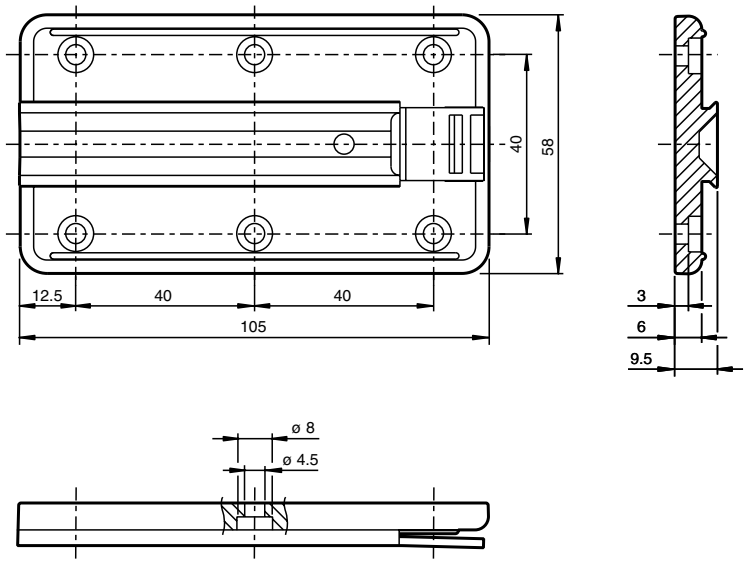


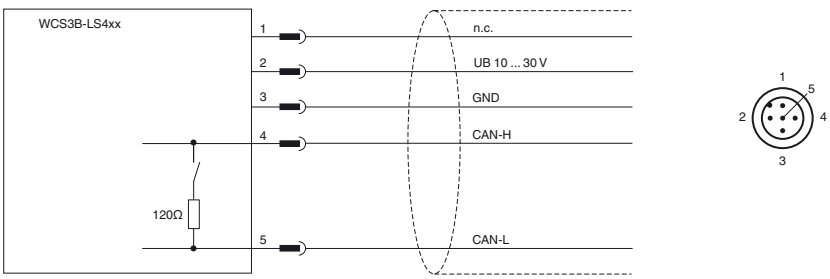


## Technical data

**General specifications**

| | | |
|---|---|---|
| Passage speed | v | ≤ 12.5 m/s |
| Measuring range | | max. 314.5 m |
| Free tolerances to code rail | | horizontal: 31 mm ( ± 15.5 mm )<br>vertical: 28 mm ( ± 14 mm ) |
| Resolution | | ± 0.4 mm (1,250 positions/m) |

Release date: 2019-08-21 14:13 Date of issue: 2019-08-21 199290-0029_eng.xml

| | | |
|---|---|---|
| **Functional safety related parameters** | | |
| $MTTF_d$ | | 98 a |
| Mission Time ($T_M$) | | 20 a |
| Diagnostic Coverage (DC) | | 0 % |
| **Indicators/operating means** | | |
| Operation indicator | | LED green: power on |
| Data flow indicator | | LED yellow: data communication active |
| Error indicator | | LED red<br>flashing: read head outside of code rail<br>solid on: internal diagnostic test failed |
| **Electrical specifications** | | |
| Operating voltage | $U_B$ | 10 ... 30 V DC |
| Power consumption | $P_0$ | 2 VA |
| **Interface** | | |
| Interface type | | CANopen , galvanically isolated |
| Data output code | | binary code |
| Transfer rate | | max. 1 MBit/s |
| Termination | | switchable |
| **Standard conformity** | | |
| Emitted interference | | DIN EN 61000-6-4 |
| Noise immunity | | DIN EN 61000-6-2 |
| Shock resistance | | DIN EN 60068-2-27, half sine 30 g, 18 ms |
| Vibration resistance | | DIN EN 60068-2-6, sine, 5 g, 10 - 2000 Hz, 10 cycles |
| **Ambient conditions** | | |
| Operating temperature | | 0 ... 60 °C (32 ... 140 °F) |
| Storage temperature | | -40 ... 85 °C (-40 ... 185 °F) |
| Relative humidity | | 90 % , noncondensing |
| **Mechanical specifications** | | |
| Connection type | | 5-pin, M12 x 1 connector |
| Degree of protection | | IP54 |
| Material | | |
| Housing | | ABS , PC (Polycarbonate) |
| Mass | | 500 g |
| **General information** | | |
| Ordering information | | Mounting plate included with delivery |

Release date: 2019-08-21 14:13 Date of issue: 2019-08-21 199290-0029_eng.xml



Refer to "General Notes Relating to Pepperl+Fuchs Product Information".
Pepperl+Fuchs Group www.pepperl-fuchs.com
USA: +1 330 486 0001 fa-info@us.pepperl-fuchs.com
Germany: +49 621 776 1111 fa-info@de.pepperl-fuchs.com
Singapore: +65 6779 9091 fa-info@sg.pepperl-fuchs.com
PEPPERL+FUCHS