

Model number

WCS3B-LS311H

Reading head, SSI interface, Gray code

Features

- SSI interface
- Non-contact, absolute position encoder
- Automatic detection of dirt accumulation
- Extended temperature range

Accessories

WCS3B-PL2
Transparent protective case and seal for WCS3B reader

WCS-MP1
Mounting plate for reading heads WCS2 and WCS3

Note

with SSI interface

Dimensions

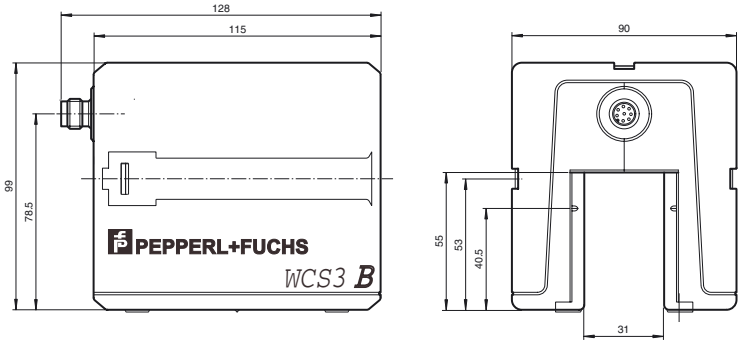

Mounting plate

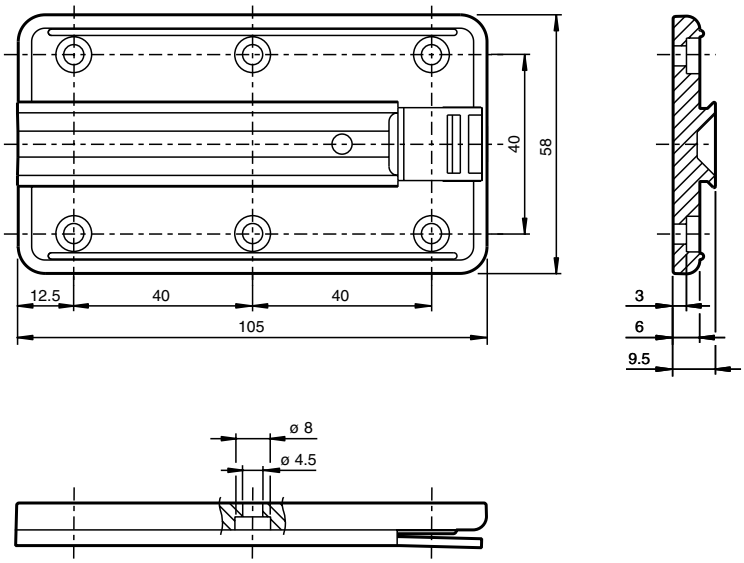

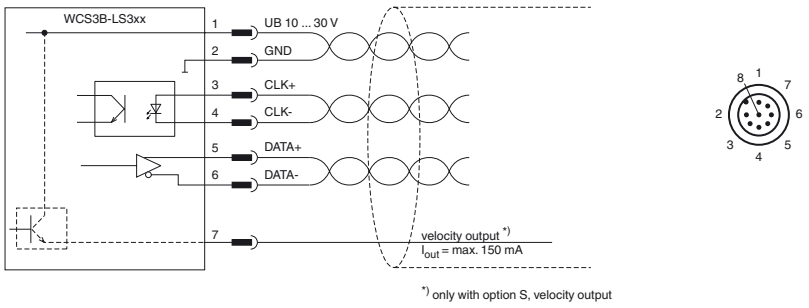

Technical data

General specifications

Passage speed	v	≤ 12.5 m/s
Measuring range		max. 314.5 m
Free tolerances to code rail		horizontal: 31 mm (± 15.5 mm) vertical: 28 mm (± 14 mm)
Resolution		± 0.4 mm (1,250 positions/m)

Release date: 2019-08-21 14:13 Date of issue: 2019-08-21 199290-0028_eng.xml

Functional safety related parameters		
$MTTF_d$		51 a
Mission Time (T_M)		10 a
Diagnostic Coverage (DC)		0 %
Indicators/operating means		
Operation indicator		LED green: power on
Data flow indicator		LED yellow: data communication active
Error indicator		LED red flashing: read head outside of code rail solid on: internal diagnostic test failed
Electrical specifications		
Operating voltage	U_B	10 ... 30 V DC
Power consumption	P_0	11 VA at 24 V DC
Interface		
Interface type		SSI interface
Data output code		Gray code , 25 bit
Clock frequency		100 ... 1000 kHz
Pause time	tp	≥ 20 µs double request possible, if $t_p \leq 10$ µs
Standard conformity		
Emitted interference		DIN EN 61000-6-4
Noise immunity		DIN EN 61000-6-2
Shock resistance		DIN EN 60068-2-27, half sine 30 g, 18 ms
Vibration resistance		DIN EN 60068-2-6, sine, 5 g, 10 - 2000 Hz, 10 cycles
Ambient conditions		
Operating temperature		-40 ... 60 °C (-40 ... 140 °F)
Storage temperature		-40 ... 85 °C (-40 ... 185 °F)
Relative humidity		90 % , noncondensing
Mechanical specifications		
Connection type		8-pin, M12 x 1 connector
Degree of protection		IP54
Material		
Housing		ABS , PC (Polycarbonate)
Mass		500 g
General information		
Ordering information		Mounting plate included with delivery

Release date: 2019-08-21 14:13 Date of issue: 2019-08-21 199290-0028_eng.xml

Refer to "General Notes Relating to Pepperl+Fuchs Product Information".
Pepperl+Fuchs Group www.pepperl-fuchs.com
USA: +1 330 486 0001 fa-info@us.pepperl-fuchs.com
Germany: +49 621 776 1111 fa-info@de.pepperl-fuchs.com
Singapore: +65 6779 9091 fa-info@sg.pepperl-fuchs.com
PEPPERL+FUCHS