WCS2705

Hall Effect Base Linear Current Sensor

Features:

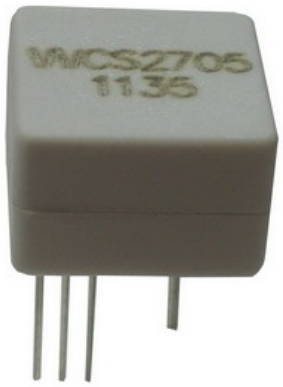

- Low noise analog signal path
- 8.3 mΩ internal conductor resistance
- Output voltage proportional to AC and DC current
- Min. sensing current 0~5.0A at 5V voltage supply
- High Sensitivity 255 mV/A
- Wide operating voltage range 3.0~12 V.
- Low operating current 3mA
- Nearly zero magnetic hysteresis.
- Ratiometric output from supply voltage
- 10K Hz bandwidth

Functional Description :

The Winson WCS2705 provides economical and precise solution for both DC and AC current sensing in industrial, commercial and communications systems. The unique package allows for easy implementation by the customer. Typical applications include motor control, load detection and management, over-current fault detection and any intelligent power management system etc…

The WCS2705 consists of a precise, low-temperature drift linear hall sensor IC with temperature compensation circuit and a current path with 8.3 mΩ typical internal conductor resistance. This extremely low resistance can effectively reduce power loss, operating temperature and increase the reliability greatly. Applied current flowing through this conduction path generates a magnetic field which is sensed by the integrated Hall IC and converted into a proportional voltage.

The terminals of the conductive path are electrically isolated from the sensor leads. This allow the WCS2705 current sensor to be used in applications requiring electrical isolation without the use of opto-isolators or other costly isolation techniques and make system more competitive in cost.

Winson reserves the right to make changes to improve reliability or manufacturability.

©Winson, 2015/5/27

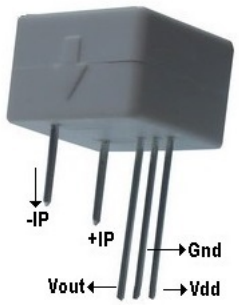

ABSOLUTE MAXIMUM RATING

Supply Voltage, Vdd	14V
Pass Current, IP	8 A
Pass Current (10ms pulse) Ipulse	20A
Output Current Sink	0.4mA
Output Current Source	2mA
Conductor Isolation Voltage	1000 V
Operating Temperature Range Ta	-20°C to +125°C
Storage Temperature Range Ts	-65°C to +150°C
Power Dissipation Pd	1 W

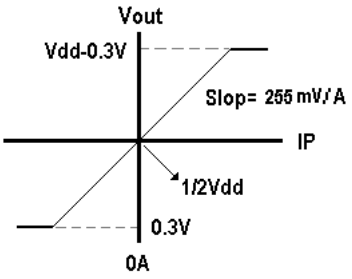

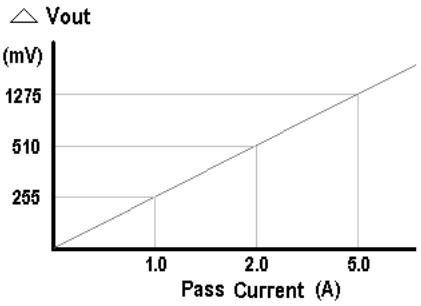

Function Block:

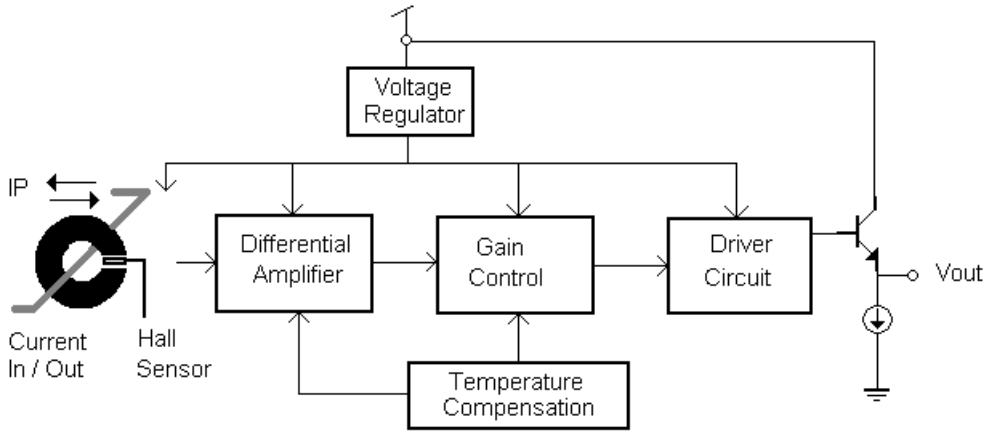

Winson reserves the right to make changes to improve reliability or manufacturability.

©Winson, 2015/5/27

Electrical Characteristics: (T=+25°C, Vdd=5.0V)

Characteristic	Symbol	Test Conditions	Min	Typ	Max	Units
Supply Voltage	Vcc	—	3.0	—	12	V
Supply Current	Isupply	IP =0 A	—	3.5	6.0	mA
Zero Current Vout	V0G	IP =0 A	2.4	2.5	2.6	V
Primary Conductor Resistance	Rprimary	IP =5 A	—	8.3	—	mΩ
Sensitivity	△Vout	IP= ± 5 A	217	255	293	mV/A
Bandwidth	BW		—	10	—	kHz
Measurable Current Range	MCR	Vdd=5V (**DC**)	—	±7.5	—	A
		Vdd=5V (**AC RMS**)	—	5	—	
Temperature Drift	△Vout	Ip =0 A	—	±0.5	—	mV/℃

1.All output-voltage measurements are made with a voltmeter having an input impedance of at least 100kΩ

2. Do not apply any load on output pin, it will degrade IC's performance.

Electrical Diagram:

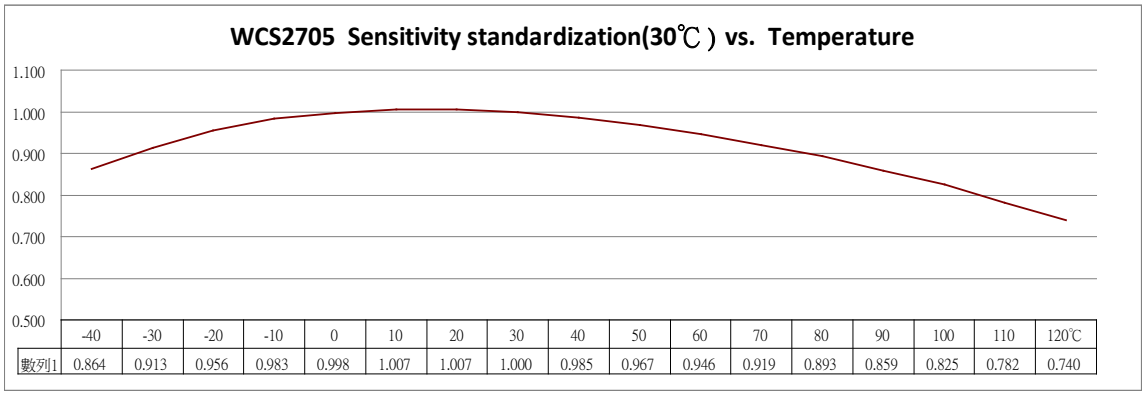

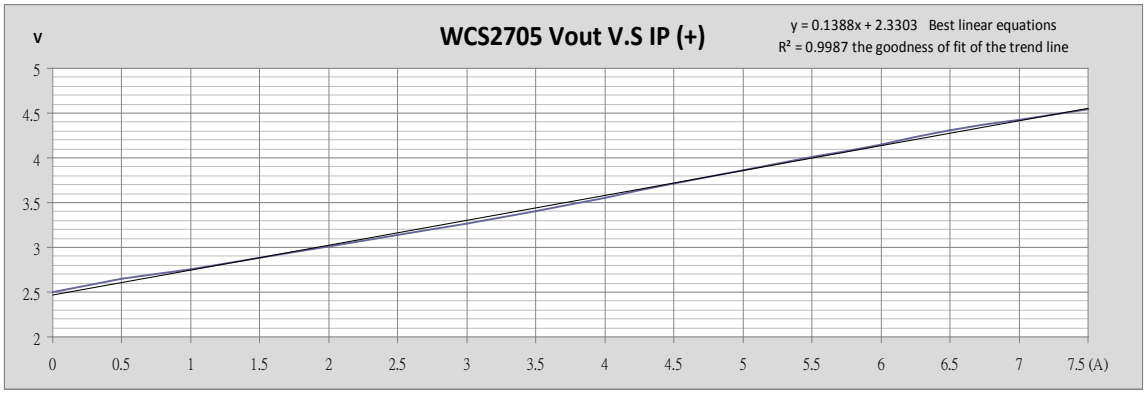

Winson reserves the right to make changes to improve reliability or manufacturability.

©Winson, 2015/5/27

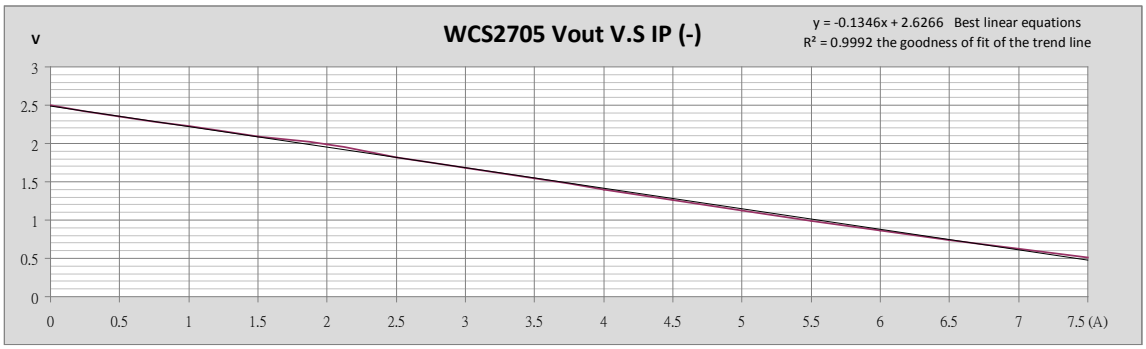

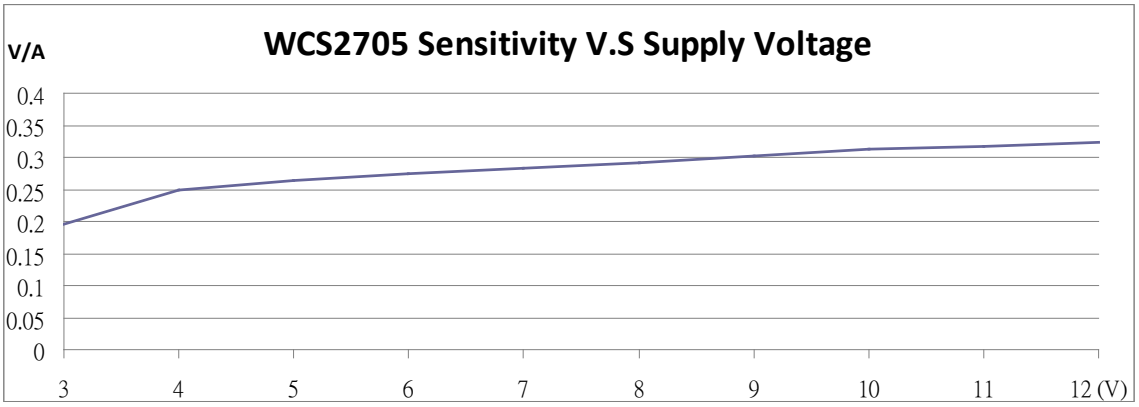

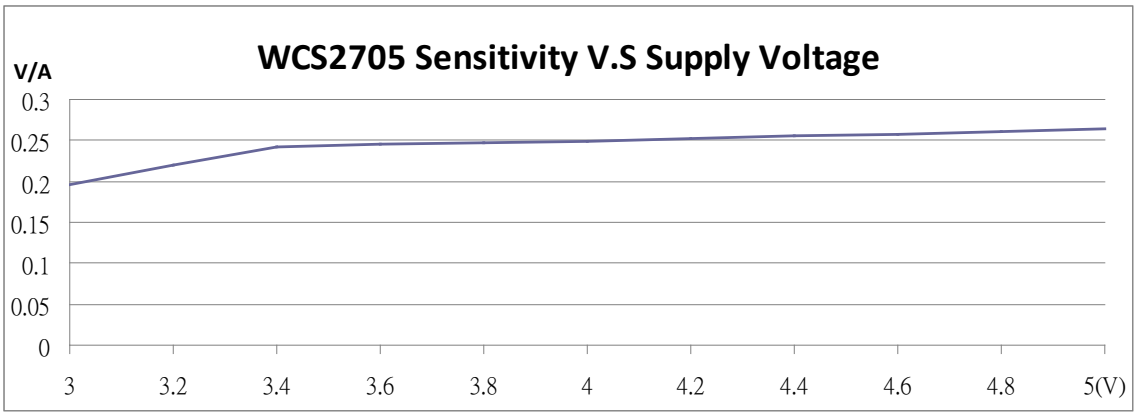

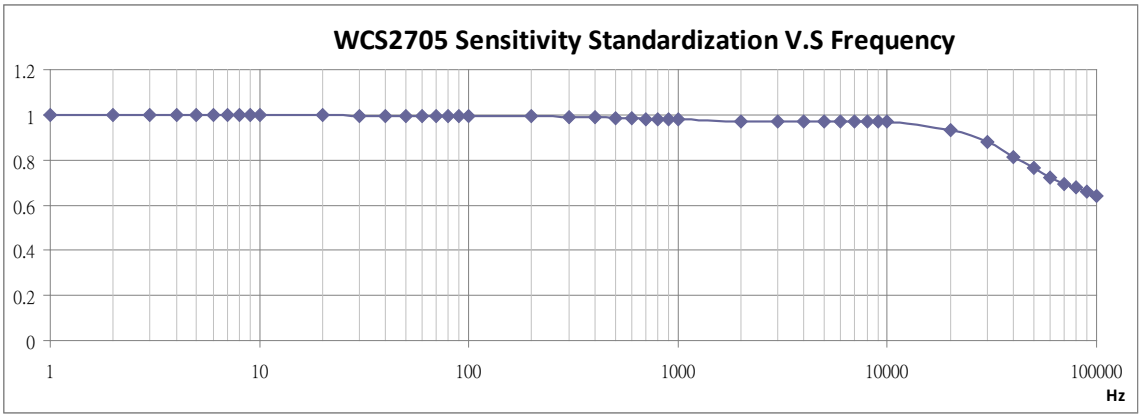

Winson reserves the right to make changes to improve reliability or manufacturability.

©Winson, 2015/5/27

Package Information:

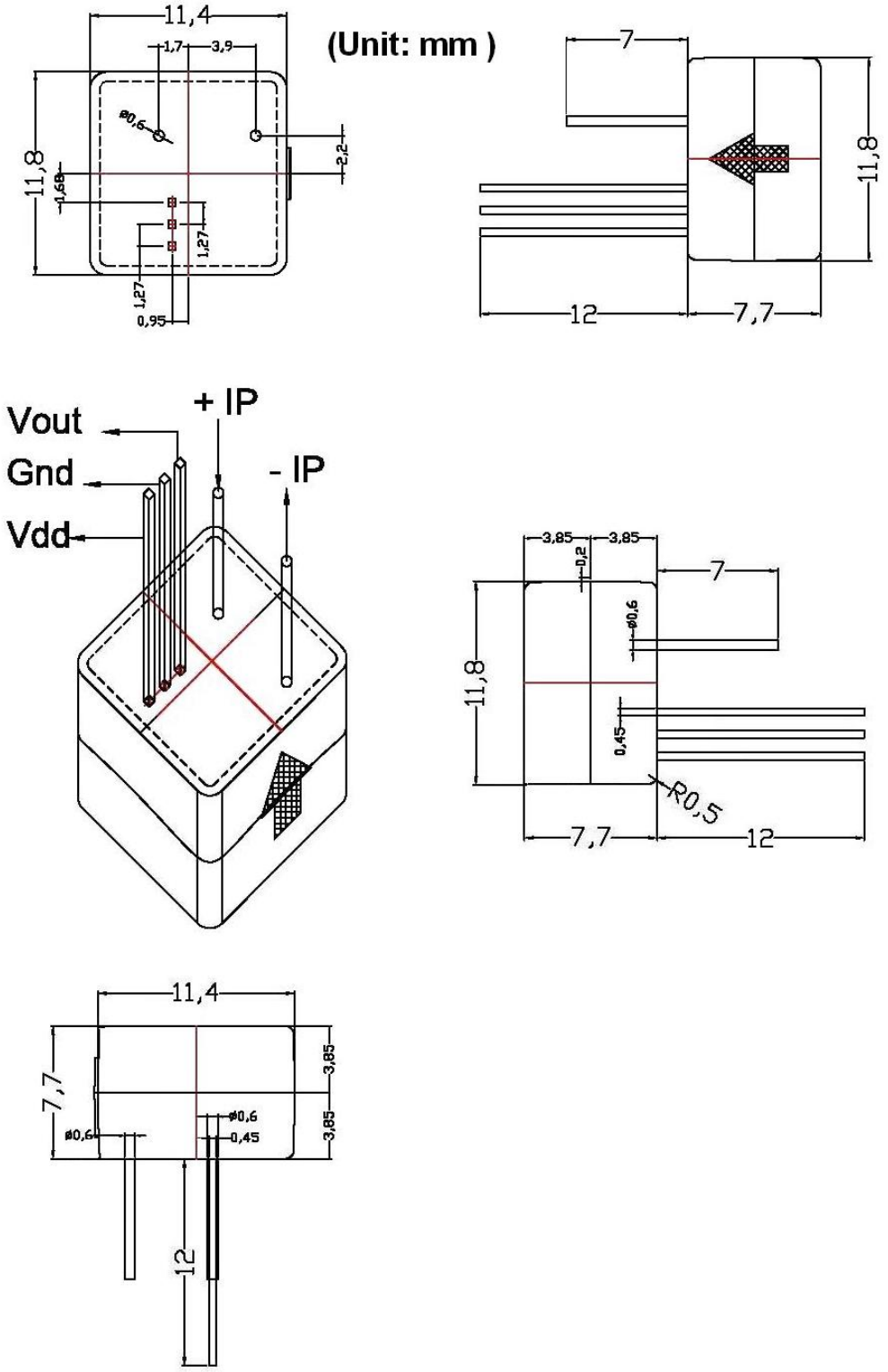

Winson reserves the right to make changes to improve reliability or manufacturability.

©Winson, 2015/5/27