WAN-0143

ADA and MASK Timing on WM9712

INTRODUCTION

This applications note has been created to detail the timing of the MASK and ADA (ADC Data Available) signals on the WM9712 device. This applications note should be used in conjunction with the latest WM9712 datasheet.

The WM9712 has many additional functions to aid the design of portable applications. Pin 47 of the device can be configured for either MASK input, ADA output or standard GPIO functionality. The MASK function can be used to pause and control auxiliary ADC conversions. The ADA function can be used to indicate when data becomes available from the auxiliary ADC. The timing associated with both signals is detailed in the following sections of this document.

WM9712 SETUP

The WM9712 device must be configured to setup the function of pin 47. The three possible setups are:

- MASK Input Function
- ADA Function
- General GPIO

To set the device into one of the three above modes the following configurations should be used.

PIN 47 MODE	REGISTER 56H BIT 4 SETTING (GPIO FUNCTION SELECT)	REGISTER 4CH BIT 4 SETTING (PIN DEFINED AS INPUT OR OUTPUT)
MASK	1	1 (Input)
ADA	1	0 (Output)
GPIO	0	1 or 0 (GPIO can be Input or Output)

Table 1 WM9712 Pin 47 Configuration

MASK FUNCTION

Sources of glitch noise, such as the signals driving an LCD display, may feed through to the touchscreen plates and affect measurement accuracy. In order to minimise this effect, a signal may be applied to MASK (pin 47) to delay or synchronise the sampling of any input to the ADC. The effect of the MASK signal depends on the MSK[1-0] bits of register 78h, as described below.

MSK[1-0]	EFFECT OF SIGNAL ON MASK PIN
00	MASK has no effect on conversions GPIO input disabled (default)
01	Static; 'hi' on MASK pin stops conversions, 'lo' has no effect.
10	Edge triggered; rising or falling edge on MASK pin delays conversions by an amount set in the DEL[3-0] register. Conversions are asynchronous to the MASK signal.
11	Synchronous mode; conversions wait until rising or falling edge on MASK initiates cycle; screen starts to be driven when the edge arrives, the conversion sample being taken a period set by DEL[3-0] after the edge.

Table 2 Controlling the MASK Feature

Copyright ©2004 Wolfson Microelectronics plc

The delay described in Table 2 refers to the length of time delay there will be from the edge of the MASK signal to the start of the next auxiliary ADC conversion. This delay is defined as shown in Table 3 and Table 4 below.

REGISTER ADDRESS	BIT	LABEL	DEFAULT	DESCRIPTION
76h	7:4	DEL	0000 (1 frame)	Delay Time

Table 3 Delay Time Control (1)

DEL	DELAY (AC-LINK FRAMES)	DELAY (TIME)
0000	1	20.8µs
0001	2	41.7µs
0010	4	83.3µs
0011	8	167µs
0100	16	333µs
0101	32	667µs
0110	48	1ms
0111	64	1.33ms
1000	96	2ms
1001	128	2.67ms
1010	160	3.33ms
1011	192	4ms
1100	224	4.67ms
1101	256	5.33ms
1110	288	6ms
1111	No delay, switch matrix always on	

Table 4 Delay Time Control (2)

The delay associated to MASK is the same as the settling delay associated with the actual auxiliary ADC measurement.

For example, when MODE is Edge triggered, an edge on the MASK input will cause the next auxiliary ADC measurement to be delayed by the value set in register 76h. After this delay for MASK the auxiliary ADC conversion will be started.

Figure 1 details the timing associated with the delay set to 2 frames for each of the active MASK modes.

With MASK = 11, a conversion will be commanded and triggered by an edge of the MASK signal. The delay from MASK edge to conversion is set by the DEL register setting. The delay is started on the first SYNC pulse after an edge is detected on MASK (see figure 2 for further details).

With MASK = 10, a previously commanded conversion is paused by a delay reflected in the DEL register setting.

With MASK = 01, any commanded conversions will be delayed while the MASK signal is HIGH. Once the MASK signal returns low normal operation will resume.

INTERFACE TIMING

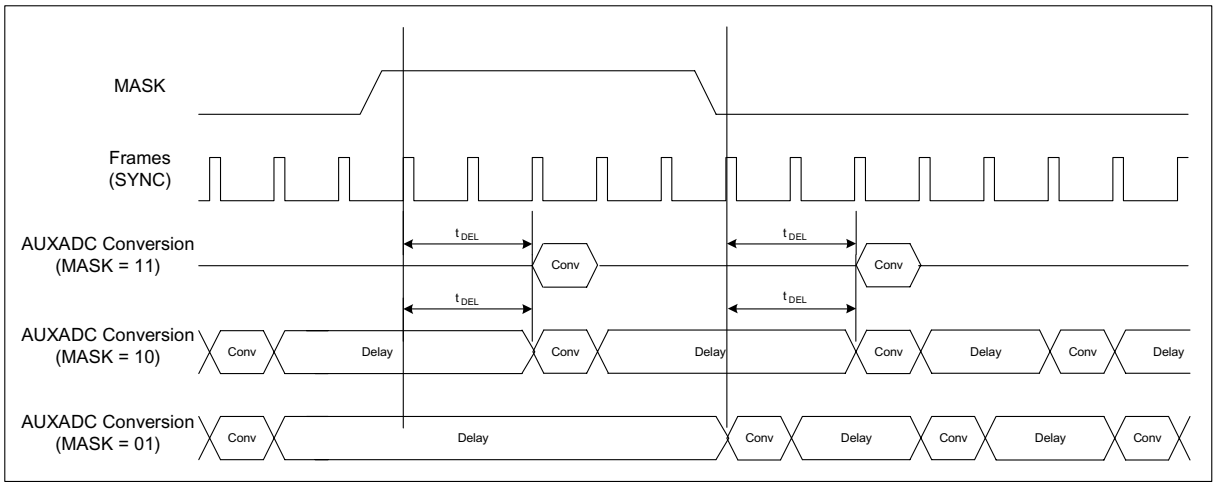

Figure 1 MASK Delay Timings (t_{DEL} = 2 frames)

PARAMETER	SYMBOL	MIN	TYP	MAX	UNIT
Frame Delay set by register 76h	t_{DEL}	0		288	frames

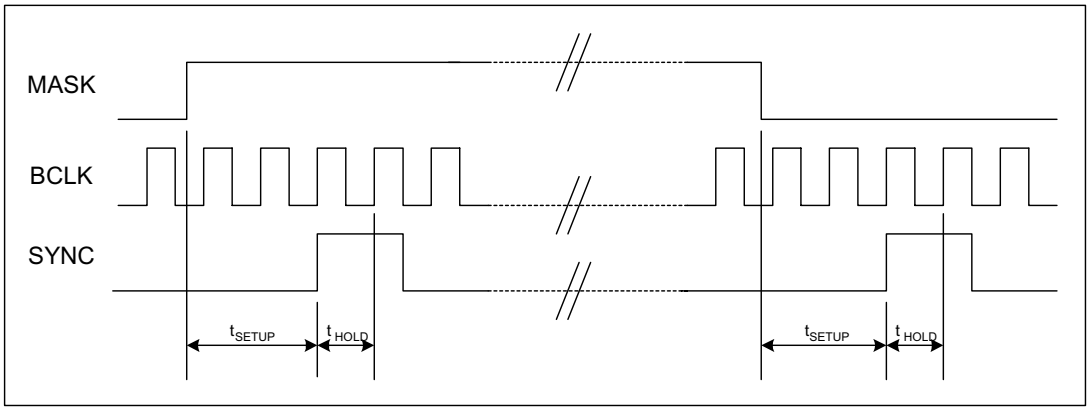

Figure 2 MASK Delay Timings

PARAMETER	SYMBOL	MIN	TYP	MAX	UNIT
Setup time from MASK edge to SYNC [1]	t_{SETUP}	162.8			ns
Hold time of MASK level from SYNC rising edge.	t_{HOLD}	81.4			ns

Note:

1. There must be at least two BCLK's between the rising edge of MASK and the rising edge of SYNC. Therefore, once MASK is high there must be at least two BCLK rising edges prior to the SYNC pulse.

ALTERNATIVE MASK FUNCTION

When MASK = 11, synchronous mode, conversions are commanded on the rising and falling edges of MASK input signal. However, there is an alternative operation which allows a pulse to be applied to the MASK pin resulting in only one conversion taking place. In this setup the edges of the pulse are too close together to allow two separate conversions to be commanded. Figure 3 details this operation and the timing associated.

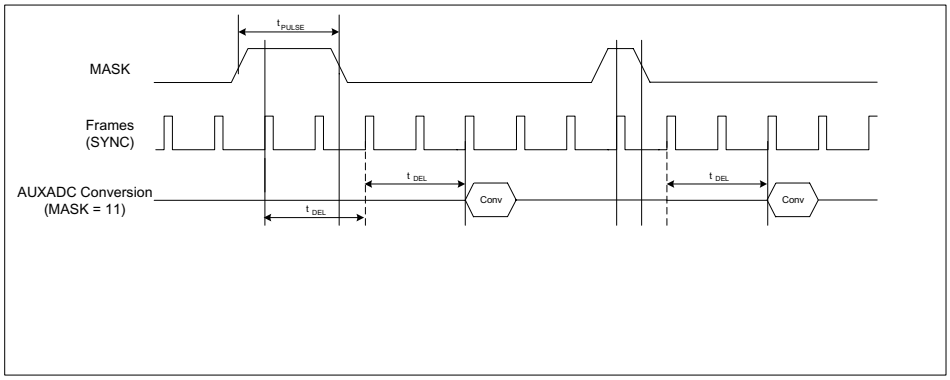

Figure 3 MASK PULSE delay timings (t_{DEL} = 2 frames)

PARAMETER	SYMBOL	MIN	TYP	MAX	UNIT
MASK Pulse Width	t_{PULSE}	100ns		< t_{DEL}	ns
Frame Delay set by register 76h	t_{DEL}	0		288	frames

ADA TIMING

Whenever data becomes available from the touchpanel ADC, the internal ADA signal goes high and remains high until the data has been read from register 7Ah (if SLEN = 0) or until it has been sent out on an AC-Link slot (if SLEN = 1).

If ADA is configured to be output on pin 47 the timing associated with this signal will be as follows.

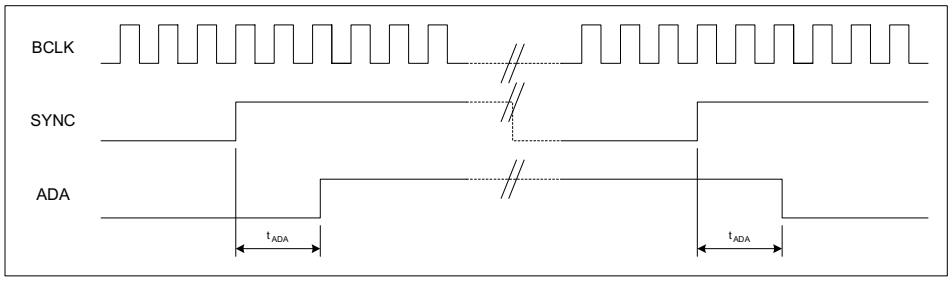

Figure 4 ADA Timings

PARAMETER	SYMBOL	MIN	TYP	MAX	UNIT
Delay from SYNC to ADA	t_{ADA}		200ns		ns

SUMMARY

Pin 47 of the WM9712 has three possible functions which are:

- MASK input,
- ADA output or
- General GPIO.

The modes and timings associated with MASK and ADA are detailed in this document. Further information on these functions and the GPIO operation is detailed in the WM9712 datasheet.

APPLICATION SUPPORT

If you require more information or require technical support please contact Wolfson Microelectronics Applications group through the following channels:

Email: apps@wolfsonmicro.com
Telephone: +44 (0)131 272 7070
Fax: +44 (0)131 272 7001
Mail: Applications at the address on last page.

or contact your local Wolfson representative.

Additional information may be made available from time to time on our web site at http://www.wolfsonmicro.com

IMPORTANT NOTICE

Wolfson Microelectronics plc (WM) reserve the right to make changes to their products or to discontinue any product or service without notice, and advise customers to obtain the latest version of relevant information to verify, before placing orders, that information being relied on is current. All products are sold subject to the WM terms and conditions of sale supplied at the time of order acknowledgement, including those pertaining to warranty, patent infringement, and limitation of liability.

WM warrants performance of its products to the specifications applicable at the time of sale in accordance with WM's standard warranty. Testing and other quality control techniques are utilised to the extent WM deems necessary to support this warranty. Specific testing of all parameters of each device is not necessarily performed, except those mandated by government requirements.

In order to minimise risks associated with customer applications, adequate design and operating safeguards must be used by the customer to minimise inherent or procedural hazards. Wolfson products are not authorised for use as critical components in life support devices or systems without the express written approval of an officer of the company. Life support devices or systems are devices or systems that are intended for surgical implant into the body, or support or sustain life, and whose failure to perform when properly used in accordance with instructions for use provided, can be reasonably expected to result in a significant injury to the user. A critical component is any component of a life support device or system whose failure to perform can be reasonably expected to cause the failure of the life support device or system, or to affect its safety or effectiveness.

WM assumes no liability for applications assistance or customer product design. WM does not warrant or represent that any license, either express or implied, is granted under any patent right, copyright, mask work right, or other intellectual property right of WM covering or relating to any combination, machine, or process in which such products or services might be or are used. WM's publication of information regarding any third party's products or services does not constitute WM's approval, license, warranty or endorsement thereof.

Reproduction of information from the WM web site or datasheets is permissible only if reproduction is without alteration and is accompanied by all associated warranties, conditions, limitations and notices. Representation or reproduction of this information with alteration voids all warranties provided for an associated WM product or service, is an unfair and deceptive business practice, and WM is not responsible nor liable for any such use.

Resale of WM's products or services with statements different from or beyond the parameters stated by WM for that product or service voids all express and any implied warranties for the associated WM product or service, is an unfair and deceptive business practice, and WM is not responsible nor liable for any such use.

ADDRESS:

Wolfson Microelectronics plc

Westfield House

26 Westfield Road

Edinburgh

EH11 2QW

Tel :: +44 (0)131 272 7000

Fax :: +44 (0)131 272 7001

Email :: apps@wolfsonmicro.com