W83L771AWG

W83L771ASG

Nuvoton

H/W Monitoring IC

DATE: NOVEMBER 19TH, 2009

REVISION: 1.91

TABLE OF CONTENTS-

1. GENERAL DESCRIPTION 1
   1.1 Product Selection Guide 1
2. FEATURES 2
   2.1 Monitoring Items - Temperature 2
   2.2 General Features 2
   2.3 Package Type 2
   2.4 Applications 2
3. KEY SPECIFICATIONS 3
4. BLOCK DIAGRAM 3
5. PIN CONFIGURATION 4
6. PIN DESCRIPTION 4
7. FUNCTIONAL DESCRIPTION 5
   7.1 General Description 5
   7.2 Access Interface 6
      7.2.1 Serial bus write to internal address register followed by the data byte 6
      7.2.2 Serial bus read form internal address register followed by the data byte 6
   7.3 $\overline{ALERT}$ Output Mode 7
      7.3.1 $\overline{ALERT}$ Output Comparator Mode 7
      7.3.2 $\overline{ALERT}$ Output Interrupt Mode 8
      7.3.3 $\overline{ALERT}$ Output SMBusTM ALERT Mode 9
   7.4 $\overline{T_CRIT_A}$ Output and T_CRIT flags 10
   7.5 Measured Temperature Data Format 11
      7.5.1 Measure Remote Temperature Data Format 11
      7.5.2 Measure Local Temperature Data Format 11
   7.6 Digital Filter 12
   7.7 Fault Detect 13
   7.8 Conversion Rate and Moving Average 13
8. CONTROL AND STATUS REGISTER 14
   8.1 W83L771AWG/ASG Registers 14
   8.2 Data Format of Temperature Registers (LT, RTHB, RTLB, LHS, RHSHB, RHSLB, LLS, RLSHB, RLSLB, RTOHB, RTOLB, RCS, LCS) 15
   8.3 Status Register (SR) 16
   8.4 Configuration Register (C) 16
   8.5 T_CRIT Hysteresis Register (TH) 17
   8.6 Conversion Rate Register (CR) 17
   8.7 Filter and Alert Configure Register (RDTF) 18
   8.8 Ideality (IDEA) 18
9. ELECTRICAL CHARACTERISTIC 19
   9.1 Absolute Maximum Ratings 19
   9.2 DC Characteristics 19
   9.3 AC Characteristics 20
10. TOP MARKING SPECIFICATIONS 21
   10.1 W83L771AWG , W83L771AWG-2 and W83L771ASG-2 TOP MARKING 21
   10.2 W83L771ASG TOP MARKING 21

11. PACKAGE SPECIFICATIONS 22
11.1 TSSOP (MSOP) 8L 3X3 MM2 22
11.2 SOP8 150mil 23
12. REVISION HISTORY 24

1. GENERAL DESCRIPTION

The W83L771AWG/ASG, a one remote and one local temperature sensor with 2 temperature alert outputs and with 2-wire System Management Bus (SMBus™) serial interface, is Nuvoton hardware monitoring IC specifically designed for PC, notebook and any embedded environments. The W83771AWG/ASG uses Ideality Factor Configuration to eliminate temperature measurement error. The remote temperature sensor input can be connected to thermal diode or transistor such as 2N3904. A 10-bit plus sign ADC (Analog to Digital Converter) with 0.125°C resolutions is built inside W83L771AWG/ASG to convert the monitored temperature value. Programmable conversion rates and stand-by mode support low-power operation.

The W83L771AWG/ASG is a high temperature accuracy, low-power consumption, SMBus™ serial interface IC, which is available in 8-pin, TSSOP (MSOP) and SOP package, with the working voltage of 3.3 V ±10%.

1.1 Product Selection Guide

PART NUMBER	SMBUS ADDRESS	FUNCTIONALITY			PACKAGE
		REMOTE	LOCAL	OTHER	
W83L771AWG	1001_100xb	1	1	Programmable temperature High/Low limit	TSSOP-8 (MSOP-8)
W83L771AWG-2	1001_101xb				
W83L771ASG	1001_100xb				SOP-8
W83L771ASG-2	1001_101xb				

2. FEATURES

2.1 Monitoring Items - Temperature

- Measure the temperature with high accuracy.
- One on-chip thermal sensor
- One remote temperature sensor input
- Ideality Factor Configuration on External Diodes.
- Remote Diode Fault Detection.

2.2 General Features

- Interface: SMBus™ serial interface
- 3.3V± 10% VCC operation
- 10 bit plus sign remote temperature data format, 0.125°C resolution
- Programmable offset register for various thermal diodes
- SMBus™ 2.0 compatible interface, supports TIMEOUT
- Programmable conversion rates allow user to optimize the power consumption.
- Supply 2 alert outputs : $\overline{ALERT}$ and $\overline{T_CRIT_A}$
- $\overline{ALERT}$ Output supports SMBus™ 2.0 protocol
- Programmable Temperature High/Low limit and hysteresis for $\overline{ALERT}$ and $\overline{T_CRIT_A}$ outputs

2.3 Package Type

- W83L771AWG in 8-pin TSSOP(MSOP)
- W83L771ASG in 8-pin SOP

2.4 Applications

- Desktop and Notebook Computers, support down to 45nm processes and below. (Please refer to application notice for details)
- Hardware Management
- Servers
- Embedded Applications

3. KEY SPECIFICATIONS

- Local temperature range and accuracy
  -40°C to +125°C (T_A)
  Typ. ± 2°C (20°C~40°C)
  Max. ± 3°C (-40°C~125°C) *1
- Remote temperature range and accuracy
  -40°C to +127°C (T_D)
  Typ. ± 1°C (25°C ~70°C)
  Typ. ± 2°C (-40°C ~127°C)
  Max. ± 3°C (-40°C~127°C) *2
- Supply voltage — 3.3V ± 10%
- Operating supply current — 900 uA typ.
- Low Power Operation — 15 µA Standby Current
- ADC resolution include sign bit — 10 Bits

*1 Guaranteed by design from -40~125 degree C, 100% tested at 85 degree C.
*2 Guaranteed by design from -40~127 degree C, 100% tested at 85 degree C.

4. BLOCK DIAGRAM

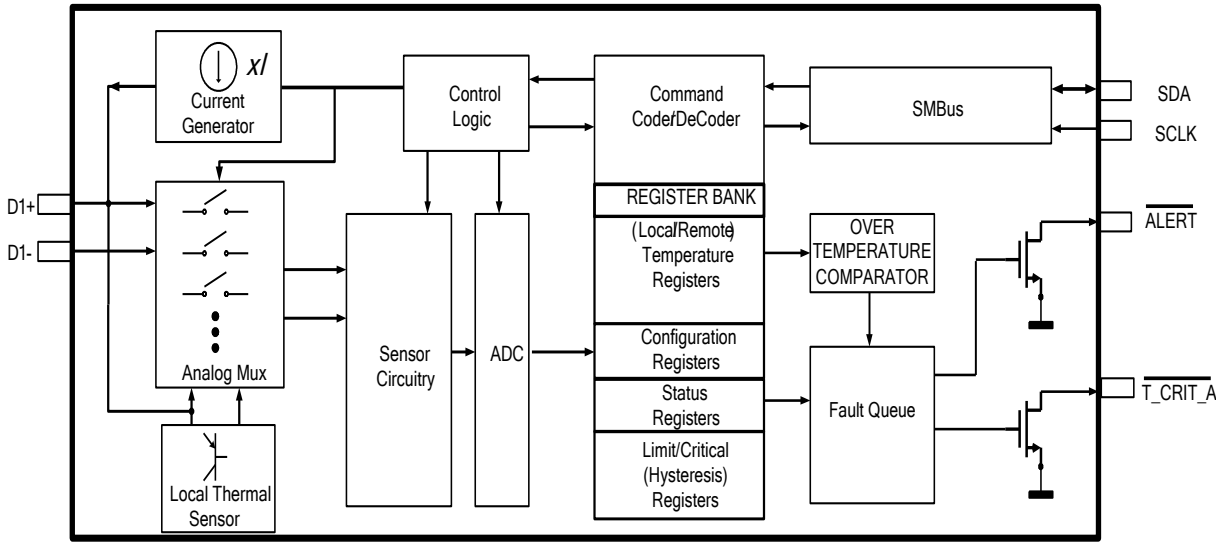

5. PIN CONFIGURATION

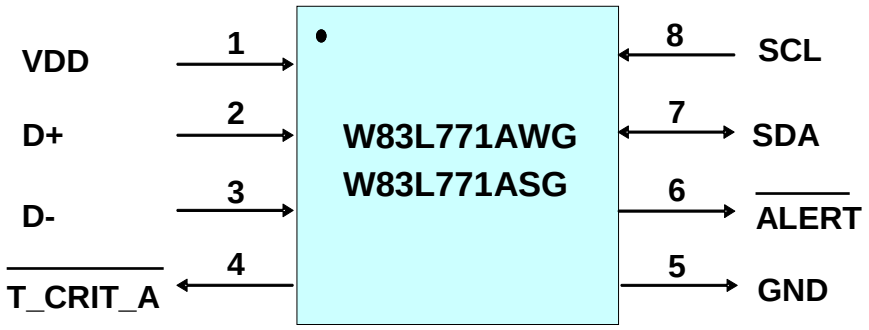

6. PIN DESCRIPTION

PIN TYPE	PIN ATTRIBUTE
I/OD_{12ts}	TTL level and schmitt trigger open drain output with 12 mA sink capability
OD_{12}	Open-drain output pin with 12 mA sink capability
IN_{ts}	TTL level input pin and schmitt trigger
AIN	Input pin (Analog)
POWER	Positive power supply input
GROUND	Power supply ground

PIN NAME	NO	PIN TYPE	DESCRIPTION
VDD	1	POWER	DC power supply, voltage input 3.3V± 10%.
D+	2	**AIN**	**Connect to Thermal Diode Anode.**
D-	3	**AIN**	**Connect to Thermal Diode Cathode.**
$\overline{T_CRIT_A}$	4	OD_{12}	T_CRIT alarm output, for interrupt or shutdown control.
GND	5	GROUND	Power supply ground
$\overline{ALERT}$	6	OD_{12}	Alarm output, for interrupt control.
SDA	7	I/OD_{12ts}	Digital I/O (Open drain). SMBus bidirectional serial data. Requires a pull-up resistor.
SCL	8	IN_{ts}	Digital Input (Open drain). SMBus serial clock input. Requires a pull-up resistor.

7. FUNCTIONAL DESCRIPTION

7.1 General Description

The W83L771AWG/ASG provides one remote temperature sensor input which can be connected to the 2N3904 transistor, or CPU/GPU thermal diode, as well as one local on die thermal sensor to detect the ambient temperature. The W83L771AWG/ASG supplies Ideality Factor Configuration on one External Diode to eliminate the temperature measurement error. Selectable conversion rates and modes allow low power operation.

The temperature measured by the W83L771AWG/ASG is digitally compared with the value stored in the programmable High/Low limit Registers and T_CRIT registers. All out-of-limit values can be detected by monitoring Status Register (SR). The W83L771AWG/ASG also supports SMBus™ 2.0 ALERT mode and TIMEOUT.

The data format of the remote temperature is represented by a 10-bit plus sign, two's complement word and 11-bit unsigned binary word with an LSB equal to 0.125°C. The real temperature equals the measured temperature plus or minus offset value. Offset value could be set in offset registers. The date format of the offset registers is also the same as the data format of the remote temperature. Local Temperature data is represented by an 8-bit plus sign, two's complement format, with an LSB equal to 1°C.

7.2 Access Interface

The W83L771AWG/ASG provides SMBus serial interface to read/write internal registers, and the SMBus address for read and write is 10011001b and 10011000b, respectively.

The W83L771AWG-2 and W83L771ASG-2 respond to hard-wire SMBus slave address as shown in Table 1.1.

The first serial bus access timing is shown as follows:

7.2.1 Serial bus write to internal address register followed by the data byte

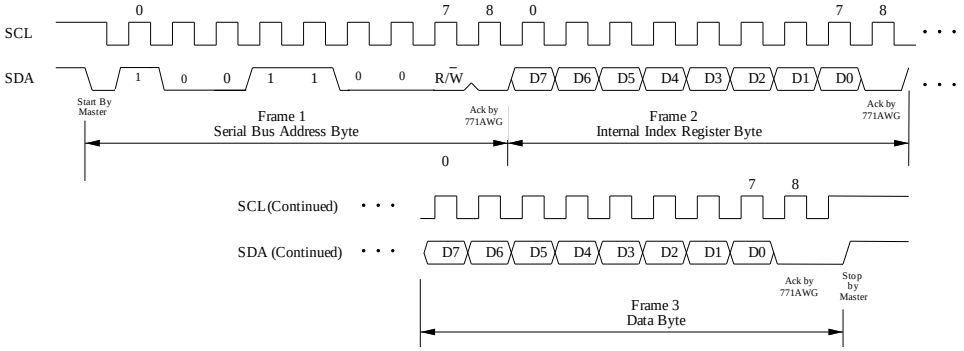

7.2.2 Serial bus read form internal address register followed by the data byte

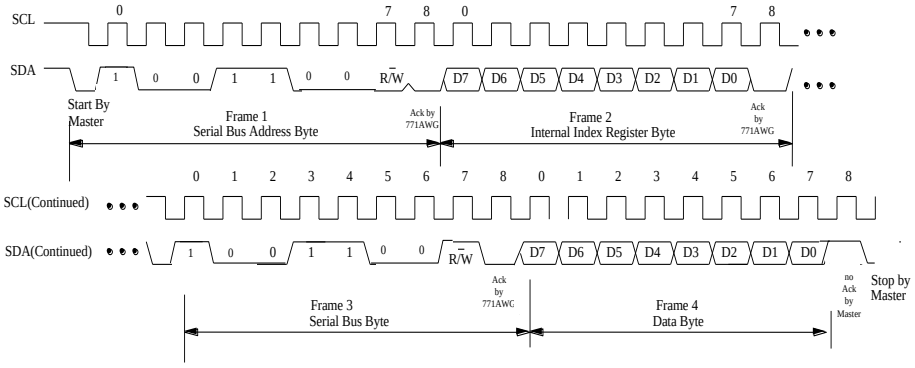

7.3 $\overline{ALERT}$ Output Mode

The W83L771AWG/ASG $\overline{ALERT}$ pin is an active-low open-drain output pin which is triggered when the measured temperature exceeds the limitation defined in the limit registers. There are three types of $\overline{ALERT}$ output mode: the $\overline{ALERT}$ output comparator mode, the $\overline{ALERT}$ output interrupt mode, and the $\overline{ALERT}$ output SMBus ALERT mode.

7.3.1 $\overline{ALERT}$ Output Comparator Mode

Fig. 7.3.1 shows the mechanism of the $\overline{ALERT}$ output comparator mode. Setting Filter and Alert Configure Register, or register address BFh, D0 to 1 could enable the $\overline{ALERT}$ output comparator mode. In this mode, the $\overline{ALERT}$ pin will be alerted if the monitored temperature is out-of-limit and the $\overline{ALERT}$ pin keeps low until the temperature goes back to the target range. This mode is not power on default setting.

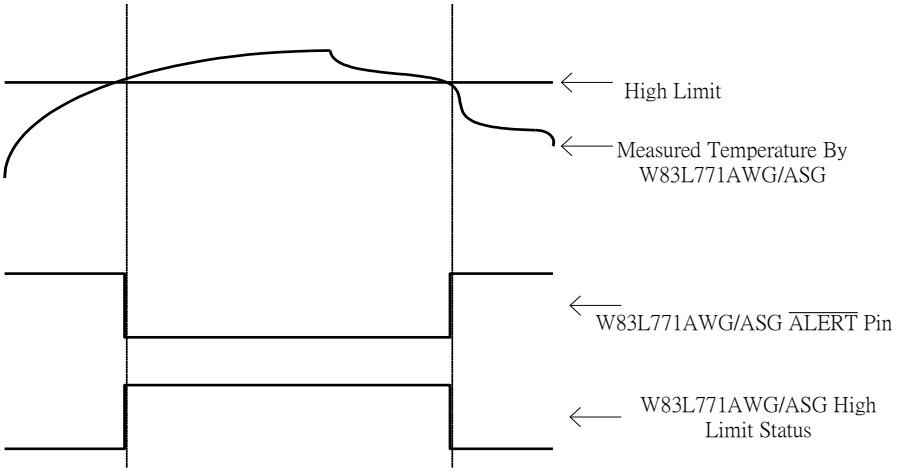

Fig. 7.3.1 Response of $\overline{ALERT}$ output comparator mode

7.3.2 $\overline{ALERT}$ Output Interrupt Mode

Fig. 7.3.2 shows the mechanism of the $\overline{ALERT}$ output interrupt mode. In this mode, the W83L771AWG/ASG will set the ALERT mask bit D7 of Configuration Register during a read of the Status Register if any flag in Status Register, except the Busy flag D7 and OPEN flag D2, is set. This prevents further $\overline{ALERT}$ triggering until the master has reset the ALERT mask bit, at the end of the interrupt service routine. The Status Register flags are cleared only upon a read command from the master and will be re-alerted at the end of the next temperature conversion if the measured temperature still falls outside of the allowed range.

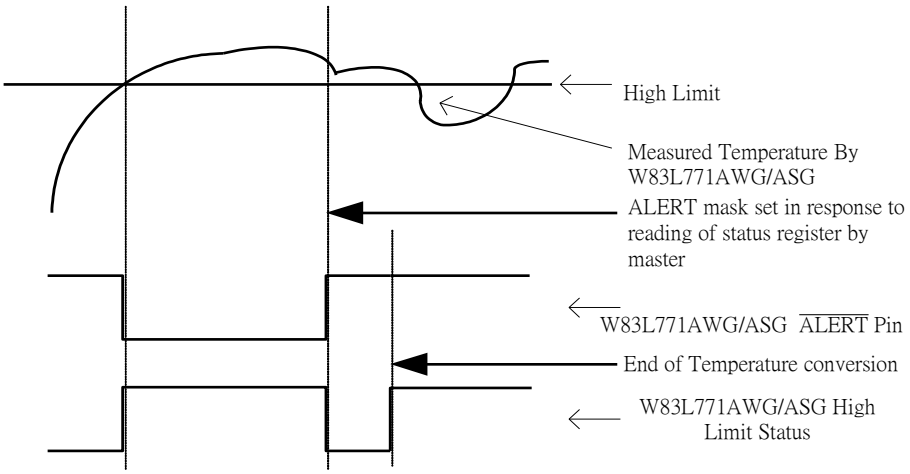

Fig. 7.3.2 Response of $\overline{ALERT}$ output interrupt mode

7.3.3 $\overline{ALERT}$ Output SMBusTM ALERT Mode

Fig. 7.3.3 shows the mechanism of the $\overline{ALERT}$ output SMBus™ ALERT mode. In this mode, the $\overline{ALERT}$ output of the W83L771AWG/ASG is connected to the SMBus™ alert line which has more than one device connected to it. Through such an implementation, SMBus™ ALERT mode can assist the master in resolving which slave generates an interrupt. When the measured temperature falls outside of the allowed range, the $\overline{ALERT}$ pin will be pulled low and the corresponding alert flags in Status Register will be pulled high. The ALERT mask bit will just be set if there is a read command for Status Register or when SMBus™ ALERT Response Address (ARA) occurs from master (Alert Response Address is 0001100). Meanwhile, the W83L771AWG/ASG will generate and return its own address to the master. If the temperature never falls outside of the allowed range, the latched $\overline{ALERT}$ pin can release by the reset ALERT mask bit and the latched corresponding alert flags in Status Register can release by reading command for Status Register. Please also refer to the W83L771AWG_773G_775G Application Note 3.pdf for implementation.

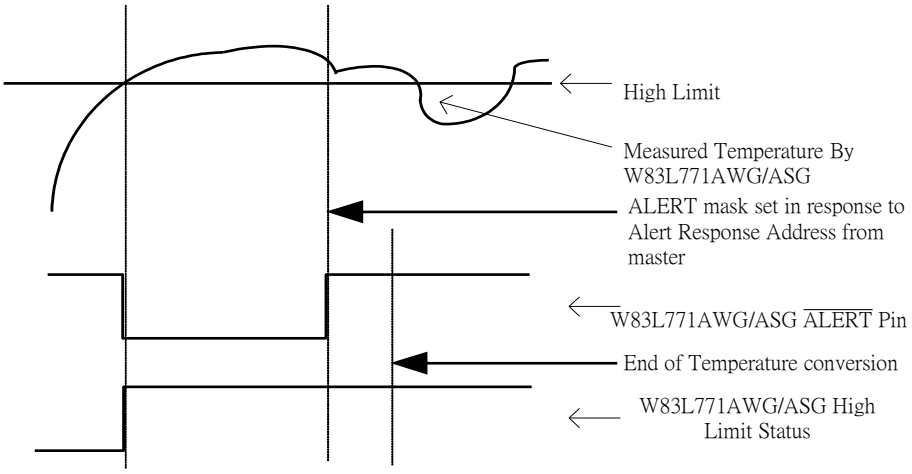

Fig. 7.3.3 Response of $\overline{ALERT}$ output SMBus alert mode

7.4 $\overline{T_CRIT_A}$ Output and T_CRIT flags

$\overline{T_CRIT_A}$ Output pulls low when the measured temperature exceeds the critical temperature (T_CRIT) defined in 19h, and 20h for Remote, and Local T_CRIT set point, respectively. Once the $\overline{T_CRIT_A}$ Output pulls low, it will not be set high until the measured temperature is lower than (T_CRIT － TH), where TH is Temperature Hysteresis. Status Register will not be reset until it is read and the temperature conversion falls below the T_CRIT set point. The ALERT will also be asserted for T_CRIT event, Figure 7.4 shows this mechanism. Please also refer to the W83L771AWG_773G_775G Application Note 4.x.pdf for implementation.

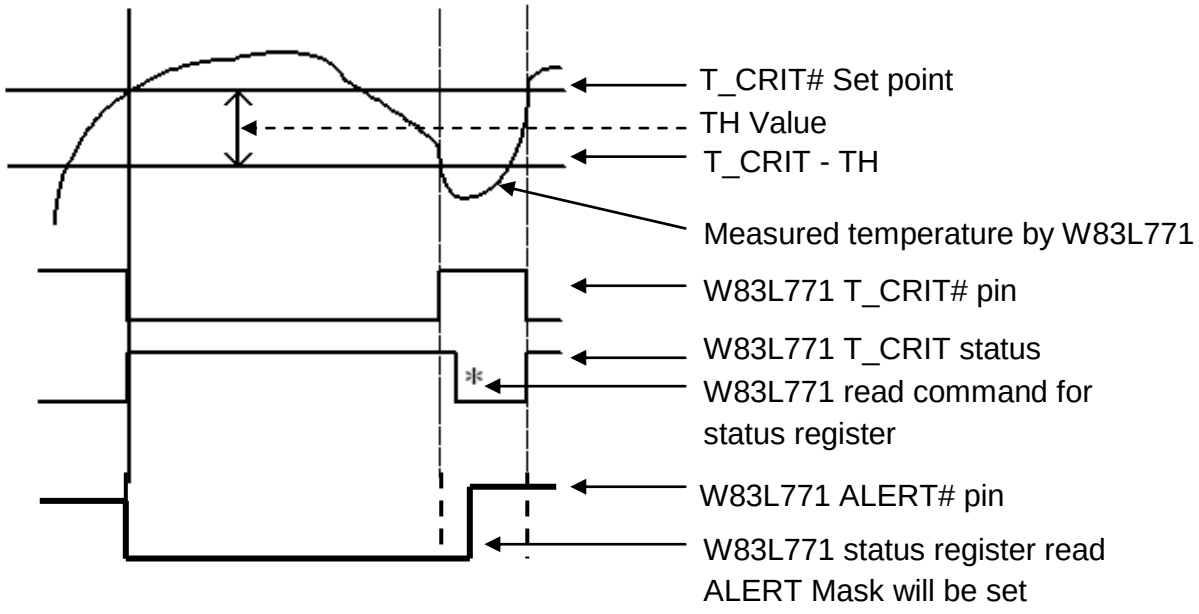

Fig. 7.4 Response of $\overline{T_CRIT_A}$ output

7.5 Measured Temperature Data Format

The W83L771AWG/ASG can measure remote temperature with the resolution of 11-bit two's complement format and local temperature with the resolution of 8-bit two's complement format.

7.5.1 Measure Remote Temperature Data Format

Table 7.5.1 shows the remote temperature data with 11-bit two's complement format.

Table 7.5.1 Measured Remote Temperature Data Format

TEMPERATURE	8-BIT DIGITAL OUTPUT HIGH BYTE	8-BIT DIGITAL OUTPUT LOW BYTE
+127.875°C	0111,1111	111X,XXXX
+25.750°C	0001,1001	110X,XXXX
+2.250°C	0000,0010	010X,XXXX
+1.125°C	0000,0001	001X,XXXX
+0.000°C	0000,0000	000X,XXXX
- 1.125°C	1111,1110	111X,XXXX
- 2.250°C	1111,1101	110X,XXXX
- 25.750°C	1110,0110	010X,XXXX
- 127.875°C	1000,0000	001X,XXXX

7.5.2 Measure Local Temperature Data Format

Table 7.5.2 shows the local temperature data with 8-bit two's complement format.

Table 7.5.2 Measured Local Temperature Data Format

TEMPERATURE	8-BIT DIGITAL OUTPUT
+127°C	0111,1111
+25°C	0001,1001
+2°C	0000,0010
+1°C	0000,0001
+0°C	0000,0000
- 1°C	1111,1111
- 2°C	1111,1110
- 25°C	1110,0111
- 128°C	1000,0000

7.6 Digital Filter

The W83L771AWG/ASG provides three Digital Filter levels to suppress erroneous remote temperature readings due to noise. The register address to set the digital filter is at Filter and Alert Configure Register. If set bits <D2, D1> = <0, 0>, then no filter is selected. If set bits <D2, D1> = <0, 1> or <1, 0>, then filter level 1 is selected. If set bits <D2, D1> = <1, 1>, then level 2 is selected. Figure 7.6.1 shows the step response of reading remote temperature with different filter level, and Figure 7.6.2 shows the impulse response.

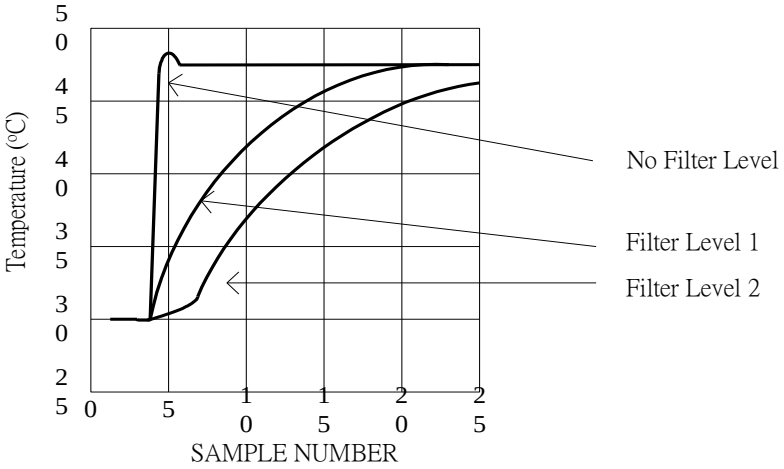

Figure 7.6.1 Step Response of reading remote temperature

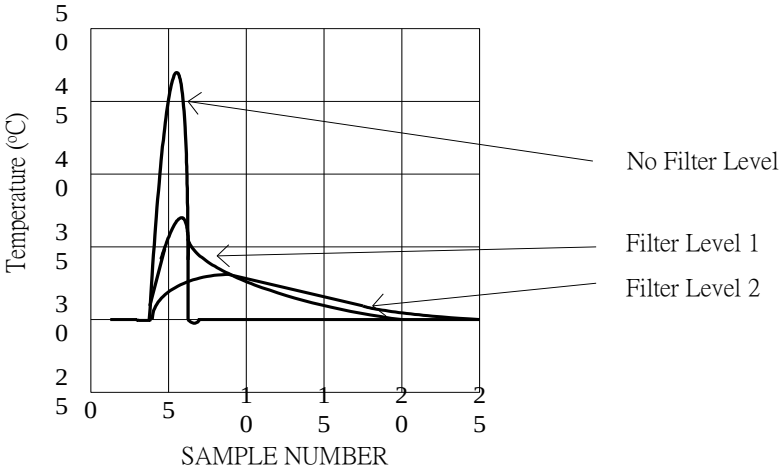

Figure 7.6.2 Impulse Response of reading remote temperature

7.7 Fault Detect

Table 7.7 shows the response of Fault Detection if the false connection of D+ and D- occurs after the power-up. Please also refer to the W83L771AWG_773G_775G Application Note 2.pdf for implementation.

Table 7.7 response of Fault Detect

CONNECTION (D+, D-)	STATUS REGISTER BIT	MEASURED REMOTE TEMPERATURE
(VDD, Floating)	1	+127.875 ℃
(GND, Floating)	1	+127.875 ℃
(Floating, Floating)	1	+127.875 ℃
Short	1	+127.875 ℃

7.8 Conversion Rate and Moving Average

The W83L771AWG/ASG provides an embedded moving average into conversion rate selection. Each conversion rate can set a couple of proper noise rejection and average supply current.

8. CONTROL AND STATUS REGISTER

8.1 W83L771AWG/ASG Registers

REGISTER NAME (HEX)	READ ADDRESS (HEX)	WRITE ADDRESS (HEX)	POWER ON DEFAULT STATES	
			<D7:D0> BINARY / HEX	DECIMAL
Local Temperature (LT)	00h	Read Only	0000,0000b / 00h	0
Remote Temperature High Byte (RTHB)	01h	Read Only	0000,0000b / 00h	0
Status Register 1 (SR)	02h	Read Only	0000,0000b / 00h	0
Configuration (C)	03h	09h	0000,0001b / 01h	1
Conversion Rate (CR)	04h	0Ah	0000,1000b / 08h	8
Local High Set point (LHS)	05h	0Bh	0100,0110b / 46h	70
Local Low Set point (LLS)	06h	0Ch	1101,1011b / DBh	-40
Remote High Set point High Byte (RHSHB)	07h	0Dh	0100,0110b / 46h	70
Remote Low Set point High Byte (RLSHB)	08h	0Eh	1101,1011b / DBh	-40
Remote Temperature Low Byte (RTLB)	10h	Read Only	0000,0000b / 00h	0
Remote Temperature Offset High Byte (RTOHB)	11h	11h	0000,0000b / 00h	0
Remote Temperature Offset Low Byte (RTOLB)	12h	12h	0000,0000b / 00h	0
Remote High Set point Low Byte (RHSLB)	13h	13h	0000,0000b / 00h	0
Remote Low Set point Low Byte (RLSLB)	14h	14h	0000,0000b / 00h	0
Remote T_CRIT Set point (RCS)	19h	19h	0110,1110b / 6Eh	110
Local T_CRIT Set point (LCS)	20h	20h	0101,0101b / 55h	85
T_CRIT Set point (TH)	21h	21h	0000,1010b / 0Ah	10
Remote Diode Temperature Filter (RDTF)	BFh	BFh	0000,0000b / 00h	0
Remote Diode ideality (IDEA)	E3h	E3h	1000,0100b / 84h	132
Read Manufacturer's ID (RMID)	FEh	Read Only	0101,1100b / 5Ch	92
Read Die Revision (RDR)	FFh	Read Only	0001,0000b / 10h 0001,0001b / 11h 0001,0011b / 13h	16 17 19

8.2 Data Format of Temperature Registers (LT, RTHB, RTLB, LHS, RHSHB, RHSLB, LLS, RLSHB, RLSLB, RTOHB, RTOLB, RCS, LCS)

The following table shows the data format, Two's Complement, of the temperature, including Local Temperature (LT), Remote Temperature High Byte (RTHB), Local High Set point (LHS), Remote High Set point High Byte (RHSHB), Local Low Set point (LLS), Remote Low Set point High Byte (RLSHB), Remote Temperature Offset High Byte (RTOHB), Remote T_CRIT Set point (RCS), Local T_CRIT Set point (LCS), Remote Temperature Low Byte (RTLB), Remote High Set point Low Byte (RHSLB), Remote Low Set point Low Byte (RLSLB), and Remote Temperature Offset Low Byte (RTOLB). Only remote temperature, remote high set point, remote low set point, and remote temperature offset support two bytes, up to 0.125℃ resolution, for the temperature data format; others support one byte, up to 1℃ resolution, for the temperature data format.

REGISTER OF *HIGH BYTE*: LT, RTHB, LHS, RHSHB, LLS, RLSHB, RTOHB, RCS, LCS								
DATA FORMAT: TWO'S COMPLEMENT FORMAT								
BIT	D7	D6	D5	D4	D3	D2	D1	D0
VALUE	Sign	64	32	16	8	4	2	1
Unit: ℃								
REGISTER OF *LOW BYTE*: RTLB, RHSLB, RLSLB, RTOLB								
DATA FORMAT: TWO'S COMPLEMENT FORMAT								
BIT	D7	D6	D5	D4	D3	D2	D1	D0
VALUE	0.5	0.25	0.125	0	0	0	0	0

The following table shows some examples.

TEMPERATURE	**REGISTER OF HIGH BYTE**								**REGISTER OF LOW BYTE (IF ANY)**							
	D7	**D6**	**D5**	**D4**	**D3**	**D2**	**D1**	**D0**	**D7**	**D6**	**D5**	**D4**	**D3**	**D2**	**D1**	**D0**
+127.875℃	0	1	1	1	1	1	1	1	1	1	1	X	X	X	X	X
0.125℃	0	0	0	0	0	0	0	0	0	0	1	X	X	X	X	X
0℃	0	0	0	0	0	0	0	0	0	0	0	X	X	X	X	X
-1.125℃	1	1	1	1	1	1	1	0	1	1	1	X	X	X	X	X
-25.75℃	1	1	1	0	0	1	1	0	0	1	0	X	X	X	X	X
-127.875℃	1	0	0	0	0	0	0	0	0	0	1	X	X	X	X	X

To obtain the two-byte temperature data correctly, it is required to read High Byte data, followed by reading Low Byte data.

8.3 Status Register (SR)

Read Address: 02h
Write Address: Read Only
Power On Default States: 00h

BIT	FLAG NAME	DESCRIPTION
D7	Busy	Setting to '1' indicates ADC is busy converting.
D6	LHIGH	Setting to '1' indicates a measured Local Temperature Higher than Local High set point (High Limit).
D5	LLOW	Setting to '1' indicates a measured Local Temperature lower than Local Low set point (Low Limit).
D4	RHIGH	Setting to '1' indicates a measured Remote Temperature higher than Remote High set point (High Limit).
D3	RLOW	Setting to '1' indicates a measured Remote Temperature lower than Remote Low set point (Low Limit).
D2	OPEN	Setting to '0' indicates that D+ and D- pins are connected with a Remote Diode. Setting to '1' indicates that D+ and D- pins are disconnected with a Remote Diode, or float, or short.
D1	RCRIT	Setting to '1' indicates a Remote Critical Temperature alarm.
D0	LCRIT	Setting to '1' indicates a Local Critical Temperature alarm.

8.4 Configuration Register (C)

Read Address: 03h
Write Address: 09h
Power On Default States: 01h

BIT	FLAG NAME	DESCRIPTION
D7	$\overline{ALERT}$ mask	If this bit is set to '1' $\overline{ALERT}$ interrupts are masked.
D6	STOP/ $\overline{RUN}$	If this bit is set to '1', Device into standby mode.
D5	0	No definition and this bit can be read as 0.
D4	Remote $\overline{T_CRIT_A}$ mask	If this bit is set to '1' Remote $\overline{T_CRIT_A}$ interrupts are masked.
D3	0	No definition and this bit can be read as 0.
D2	Local $\overline{T_CRIT_A}$ mask	If this bit is set to '1' Local $\overline{T_CRIT_A}$ interrupts are masked.
D1	0	No definition and this bit can be read as 0.
D0	Reserved	Reserved

8.5 T_CRIT Hysteresis Register (TH)

Read Address: 21h
Write Address: 21h
Power On Default States: 0Ah

REGISTER: TH	***(MAX. VALUE: 31)***							
BIT	D7	D6	D5	D4	D3	D2	D1	D0
VALUE	0	0	0	16	8	4	2	1
Unit: ℃								

8.6 Conversion Rate Register (CR)

Read Address: 04h
Write Address: 0Ah
Power On Default States: 08h

REGISTER: CR	***(DEFAULT CONVERSION RATE: 16HZ)***			
(OPENA, OPENB)	0		1	
Temp. sensor	1 local + 1remote(A or B)		1 local	
BIT<D7:D0>	Frequency/Time(Sec)	Average I_{VDD}	Frequency/Time(Sec)	Average I_{VDD}
00h	0.0625Hz/16	==	0.0625Hz/16	==
01h	0.125Hz/8	==	0.125Hz/8	==
02h	0.25Hz/4	==	0.25Hz/4	==
03h	0.5Hz/2	211uA	0.5Hz/2	211uA
04h	1Hz/1	232uA	1Hz/1	232uA
05h	2Hz/0.5	331uA	2Hz/0.5	331uA
06h	4Hz/0.25	393uA	4Hz/0.25	393uA
07h	8Hz/0.125	589uA	8Hz/0.125	589uA
08h	16Hz/0.0625	833uA	16Hz/0.0625	833uA
09h-FFh	Reserved		Reserved	

8.7 Filter and Alert Configure Register (RDTF)

Read Address: BFh

Write Address: BFh

Power On Default States: 00h

BIT	COMMAND	DESCRIPTION
<D7:D3>	0	No definition and this bit can be read as 0.
<D2:D1>	RDTFA Filter Level	<D2, D1>=<0, 0>: No Filter Selected <D2, D1>=<0, 1> or <1, 0>: Filter Level 1 Selected <D2, D1>=<1, 1>: Filter Level 2 Selected
D0	$\overline{ALERT}$ Configure	If this bit is set to '1' $\overline{ALERT}$ Output Comparator mode is enabled.

8.8 Ideality (IDEA)

The Ideality Factor is dependant upon the process that was used in the fabrication of the particular diode.

Read Address: E3h

Write Address: E3h

Power On Default States: 84h

REGISTER: IDEA ***(DEFAULT IDEALITY: 1.003)***	
BIT<D7:D0>	**RANGE**
86h	0.9851~0.9924
85h	0.9925~1.0000
84h	1.0001~1.0076
83h	1.0077~1.0153
82h	1.0154~1.0232
81h	1.0233~1.0312
80h	1.0313~1.0393
7Fh	1.0394~1.0476
7Eh	1.0477~1.0560
7Dh	1.0561~1.0645
7Ch	1.0646~1.0731
7Bh	1.0732~1.0819
00h-7Ah, 87h-FFh	Reserved

9. ELECTRICAL CHARACTERISTIC

9.1 Absolute Maximum Ratings

PARAMETER	RATING	UNIT
Power Supply Voltage	3.3V ± 10%	V
Input Voltage	-0.3 to +3.6	V
Operating Temperature*	-40 to +125	° C
Storage Temperature	-50 to +150	° C

*Guaranteed by design, 100% test at 85 degreeC.

Note: Exposure to conditions beyond those listed under Absolute Maximum Ratings may adversely affect the life and reliability of the device.

9.2 DC Characteristics

(Ta = 0° C to 85° C, VDD = 3.3V ± 10%, VSS = 0V)

PARAMETER	SYM.	MIN.	TYP.	MAX.	UNIT	CONDITIONS
I/O_{12ts} - TTL level bi-directional pin with source-sink capability of 12 mA and schmitt-trigger level input						
Input Low Threshold Voltage	V_{t-}	0.5	0.8	1.1	V	V_{DD} = 3.3 V
Input High Threshold Voltage	V_{t+}	1.6	2.0	2.4	V	V_{DD} = 3.3 V
Hysteresis	V_{TH}	0.5	1.2		V	V_{DD} = 3.3 V
Output Low Voltage	V_{OL}			0.4	V	I_{OL} = 12 mA
Output High Voltage	V_{OH}	2.4			V	I_{OH} = - 12 mA
Input High Leakage	I_{LIH}			+10	μA	V_{IN} = V_{DD}
Input Low Leakage	I_{LIL}			-10	μA	V_{IN} = 0V
OD_{12} - Open-drain output pin with sink capability of 12 mA						
Output Low Voltage	V_{OL}			0.4	V	I_{OL} = 12 mA
IN_{ts} - TTL level Schmitt-triggered input pin						
Input Low Threshold Voltage	V_{t-}	0.5	0.8	1.1	V	V_{DD} = 3.3 V
Input High Threshold Voltage	V_{t+}	1.6	2.0	2.4	V	V_{DD} = 3.3 V
Hysteresis	V_{TH}	0.5	1.2		V	V_{DD} = 3.3 V
Input High Leakage	I_{LIH}			+10	μA	V_{IN} = V_{DD}
Input Low Leakage	I_{LIL}			-10	μA	V_{IN} = 0 V

9.3 AC Characteristics

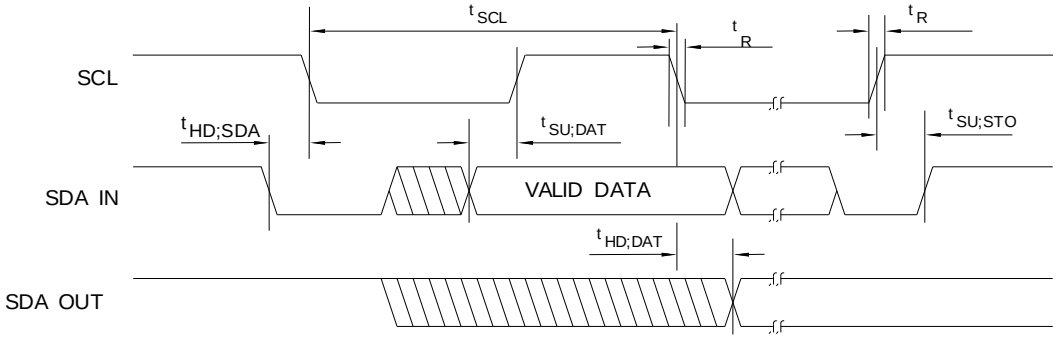

Serial Bus Timing Diagram

Timing for W83L771AWG/ASG :

PARAMETER	SYMBOL	MIN.	MAX.	UNIT
SCL clock period	t_{SCL}	2.5		uS
Start condition hold time	$t_{HD;SDA}$	1.5		uS
Stop condition setup-up time	$t_{SU;STO}$	1		uS
DATA to SCL setup time	$t_{SU;DAT}$	120		nS
DATA to SCL hold time	$t_{HD;DAT}$	5		nS
SCL and SDA rise time	t_R		1.0	uS
SCL and SDA fall time	t_F		300	nS

10. TOP MARKING SPECIFICATIONS

10.1 W83L771AWG , W83L771AWG-2 and W83L771ASG-2 TOP MARKING

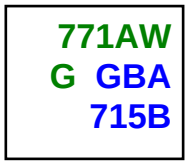

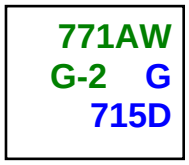



FIRST+SECOND LINE	IC part number: 771AWG (W83L771AWG), 771AWG-2 (W83L771AWG-2), 771ASG-2 (W83L771ASG-2)	
SECOND LINE	Tracking Code 1	
	G	Assembly house code
	BA	Mask version (eliminated from the top marking of W83L771AWG-2 and W83L771ASG-2)
THIRD LINE	Tracking Code 2	
	7	The package is made in 2007
	15	Week: 15
	B	IC version

10.2 W83L771ASG TOP MARKING

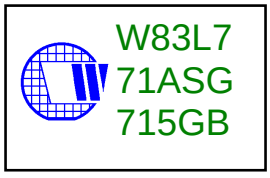

FIRST+SECOND LINE	IC part number: W83L771ASG	
THIRD LINE	Tracking Code 2	
	7	The package is made in 2007
	15	Week: 15
	G	Assembly house code
	B	IC version

11. PACKAGE SPECIFICATIONS

11.1 TSSOP (MSOP) 8L 3X3 MM2

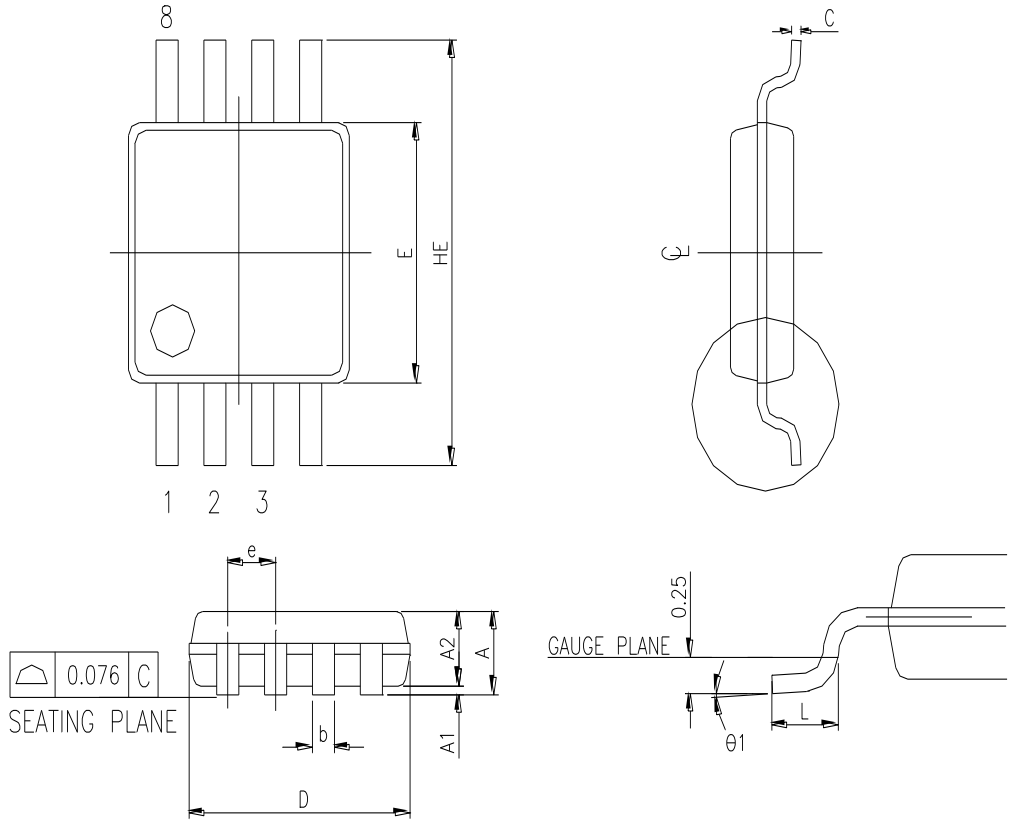

CONTROLLING DIMENSION : MILLIMETERS

SYMBOL	DIMENSION IN MM			DIMENSION IN INCH		
	MIN.	NOM.	MAX.	MIN.	NOM.	MAX.
A	---	---	1.10	---	---	0.043
A1	0.05	---	0.15	0.002	---	0.006
A2	0.81	0.86	0.91	0.032	0.034	0.036
c	0.13	---	0.23	0.005	---	0.009
b	0.25	---	0.40	0.0098	---	0.0157
D	2.90	3.00	3.10	0.114	0.118	0.122
E	2.90	3.00	3.10	0.114	0.118	0.122
HE	4.90 BSC			0.193 BSC		
L	0.445	0.55	0.648	0.0175	0.0217	0.0255
θ1	0°		6°	0°		6°
e	0.65 BSC			0.026 BSC		

11.2 SOP8 150mil

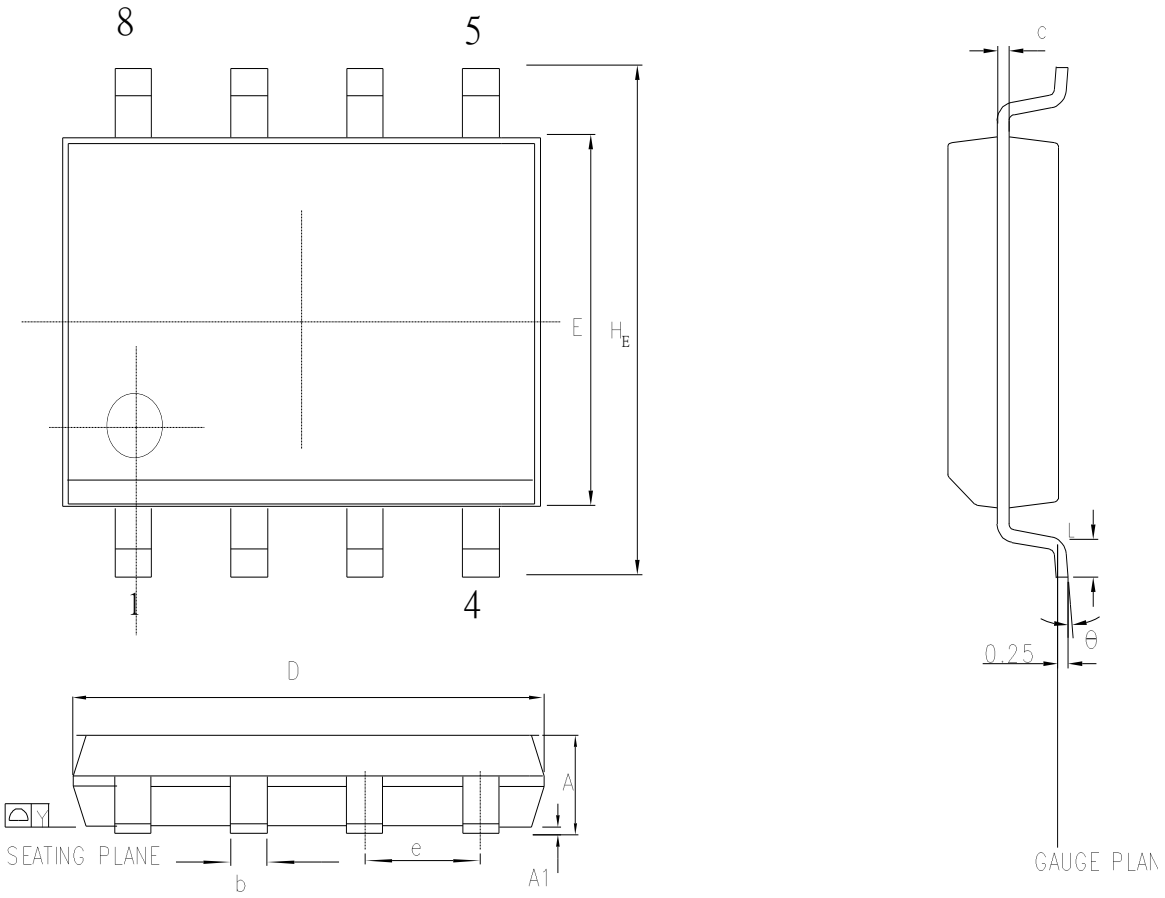

Control demensions are in milmeters .

SYMBOL	DIMENSION IN MM		DIMENSION IN INCH	
	MIN.	MAX.	MIN.	MAX.
A	1.35	1.75	0.053	0.069
A1	0.10	0.25	0.004	0.010
b	0.33	0.51	0.013	0.020
c	0.19	0.25	0.008	0.010
E	3.80	4.00	0.150	0.157
D	4.80	5.00	0.188	0.196
e	1.27 BSC		0.050 BSC	
H_E	5.80	6.20	0.228	0.244
Y	—	0.10	—	0.004
L	0.40	1.27	0.016	0.050
θ	0	10	0	10

12. REVISION HISTORY

VERSION	DATE	PAGE	DESCRIPTION
1.0	01/28/2008	20	The versions before 1.0 are preliminary version Remove section 8.9 Configuration on Beta Compensation Technology.
1.1	03/04/2008	3, 5, 6, 8, 9, 10, 15, 17, 20	1. Modify Chapter 4 Block Diagram. 2. Add the descriptions of “POWER” and “GROUND” to Chapter 6 Pin Descriptions. 3. Correct the description and update “ALERT protocol” to “ALERT mode” in section 7.1 General Description. 4. Update the descriptions in 7.3.2 $\overline{ALERT}$ Output Interrupt Mode. 5. Update Figure 7.3.1, Figure 7.3.2, Figure 7.3.3, Figure 7.4, and Figure 7.6.1. 6. Update “RDTF1” to “RDTF”, remove “Remote Diode Ideality Low Byte”, and correct the default of “Remote Diode Ideality” in section 8.1 W83L771AWG/ASG Registers. 7. Update the information in section 9.1 Absolute Maximum Ratings. 8. Modify the description of bit D2 of 8.3 Status Register.
1.2	03/25/2008	17-19	1. Add the power-on default states, read address, and write address of registers
1.3	01/15/2009	1,15,19,22	1. Modified the typo of Ideality CR[E3h] default value. 2. Added W83L771AWG-2/ASG-2 info.
1.4	02/03/2009	3	1. Modified the remote temperature accuracy range.
1.5	03/06/2009	3	1. Added maximum accuracy range definition.
1.6	04/15/2009	3,19	1. Modified the operation temperature range definition.
1.7	06/18/2009	2	Added processor type support description.
1.8	10/7/2009	9,10,13	1. Added APN reference description. 2. Added application notice for T_CRIT#.
1.9	10/21/2009	20	1. Modified the AC characteristic to support 400KHz serial bus.
1.91	11/19/2009	21	1. Correct the top marking

Important Notice

Nuvoton Products are neither intended nor warranted for usage in systems or equipment, any malfunction or failure of which may cause loss of human life, bodily injury or severe property damage. Such applications are deemed, "Insecure Usage".

Insecure usage includes, but is not limited to: equipment for surgical implementation, atomic energy control instruments, airplane or spaceship instruments, the control or operation of dynamic, brake or safety systems designed for vehicular use, traffic signal instruments, all types of safety devices, and other applications intended to support or sustain life.

All Insecure Usage shall be made at customer's risk, and in the event that third parties lay claims to Nuvoton as a result of customer's Insecure Usage, customer shall indemnify the damages and liabilities thus incurred by Nuvoton.

Please note that all data and specifications are subject to change without notice.
All the trademarks of products and companies mentioned in this datasheet belong to their respective owners.