Winbond Electronics Corp.

8 BIT MICROCONTROLLER

GENERAL DESCRIPTION

The W77C32 is a fast 8051 compatible microcontroller with a redesigned processor core without wasted clock and memory cycles. As a result, it executes every 8051 instruction faster than the original 8051 for the same crystal speed. Typically, the instruction executing time of W77C32 is 1.5 to 3 times faster then that of traditional 8051, depending on the type of instruction. In general, the overall performance is about 2.5 times better than the original for the same crystal speed. Giving the same throughput with lower clock speed, power consumption has been improved. Consequently, the W77C32 is a fully static CMOS design; it can also be operated at a lower crystal clock. The W77C32 provides operating voltage from 4.5V to 5.5V. All W77C32 types also support on-chip 1KB SRAM without external memory component and glue logic, saving more I/O pins for users application usage if they use on-chip SRAM instead of external SRAM.

FEATURES

- 8-bit CMOS microcontroller
- High speed architecture of 4 clocks/machine cycle runs up to 40 MHz
- Pin compatible with standard 80C52
- Instruction-set compatible with MCS-51
- Four 8-bit I/O Ports
- One extra 4-bit I/O port and Wait State control signal (available on 44-pin PLCC/QFP package)
- Three 16-bit Timers
- 12 interrupt sources with two levels of priority
- On-chip oscillator and clock circuitry
- Two enhanced full duplex serial ports
- 256 bytes scratch-pad RAM
- 1KB on-chip SRAM for MOVX instruction
- Programmable Watchdog Timer
- Dual 16-bit Data Pointers
- Software programmable access cycle to external RAM/peripherals
- Packages:
  - DIP 40: W77C32-25/40
  - PLCC 44: W77C32P-25/40
  - QFP 44: W77C32F-25/40

PIN CONFIGURATIONS

40-Pin DIP (W77C32)

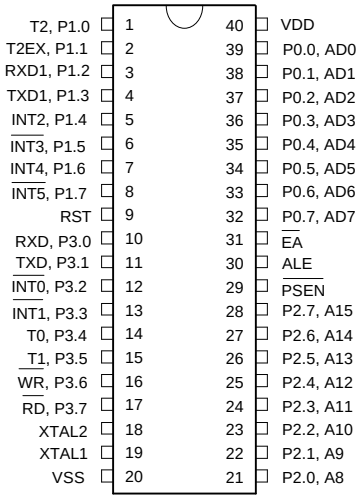

44-Pin PLCC (W77C32P)

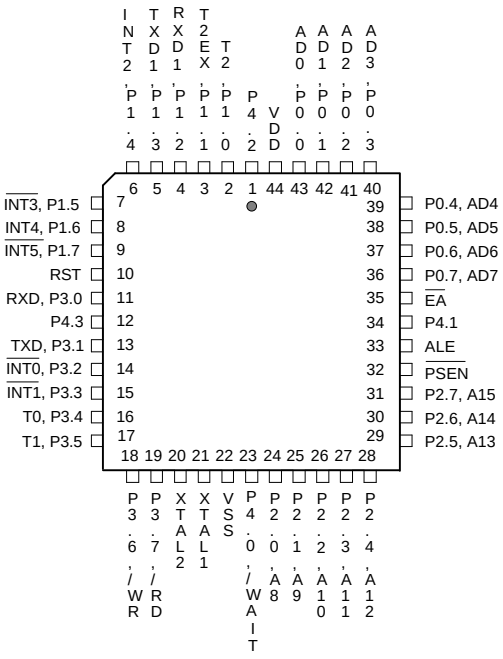

44-Pin QFP (W77C32F)

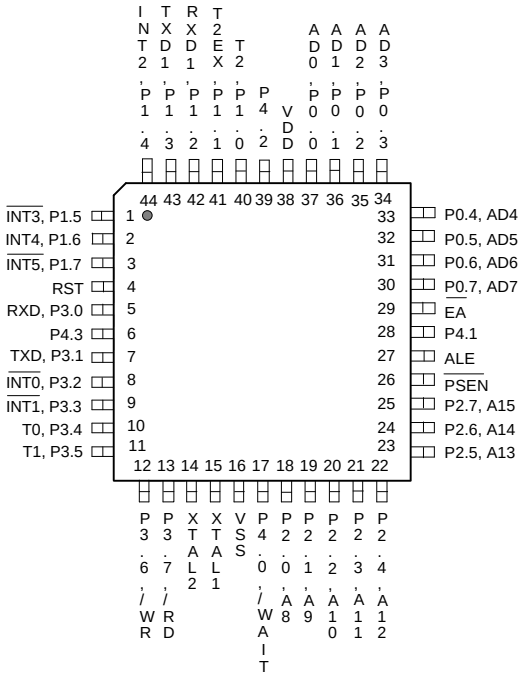

PIN DESCRIPTION

SYMBOL	TYPE	DESCRIPTIONS
$\overline{EA}$	I	**EXTERNAL ACCESS ENABLE**: It should be kept low.
$\overline{PSEN}$	O	**PROGRAM STORE ENABLE**: $\overline{PSEN}$ enables the external ROM data onto the Port 0 address/data bus during fetch and MOVC operations.
ALE	O	**ADDRESS LATCH ENABLE**: ALE is used to enable the address latch that separates the address from the data on Port 0.
RST	I	**RESET**: A high on this pin for two machine cycles while the oscillator is running resets the device.
XTAL1	I	**CRYSTAL1**: This is the crystal oscillator input. This pin may be driven by an external clock.
XTAL2	O	**CRYSTAL2**: This is the crystal oscillator output. It is the inversion of XTAL1.
V_{SS}	I	**GROUND**: Ground potential
V_{DD}	I	**POWER SUPPLY**: Supply voltage for operation.
P0.0–P0.7	I/O	**PORT 0**: Port 0 is an open-drain bi-directional I/O port. This port also provides a multiplexed low order address/data bus during accesses to external memory.
P1.0–P1.7	I/O	**PORT 1**: Port 1 is a bi-directional I/O port with internal pull-ups. The bits have alternate functions which are described below: T2(P1.0): Timer/Counter 2 external count input T2EX(P1.1): Timer/Counter 2 Reload/Capture/Direction control RXD1(P1.2): Serial port 1 RXD TXD1(P1.3): Serial port 1 TXD INT2(P1.4): External Interrupt 2 $\overline{INT3}$ (P1.5): External Interrupt 3 INT4(P1.6): External Interrupt 4 $\overline{INT5}$ (P1.7): External Interrupt 5
P2.0–P2.7	I/O	**PORT 2**: Port 2 is a bi-directional I/O port with internal pull-ups. This port also provides the upper address bits for accesses to external memory.
P3.0–P3.7	I/O	**PORT 3**: Port 3 is a bi-directional I/O port with internal pull-ups. All bits have alternate functions, which are described below: RXD(P3.0) : Serial Port 0 input TXD(P3.1) : Serial Port 0 output $\overline{INT0}$ (P3.2) : External Interrupt 0 $\overline{INT1}$(P3.3) : External Interrupt 1 T0(P3.4) : Timer 0 External Input T1(P3.5) : Timer 1 External Input $\overline{WR}$ (P3.6) : External Data Memory Write Strobe $\overline{RD}$ (P3.7) : External Data Memory Read Strobe
P4.0–P4.3	I/O	**PORT 4:** Port 4 is a 4-bit bi-directional I/O port. The P4.0 also provides the alternate function $\overline{WAIT}$ which is the wait state control signal.

* Note: **TYPE** I: input, O: output, I/O: bi-directional.

BLOCK DIAGRAM

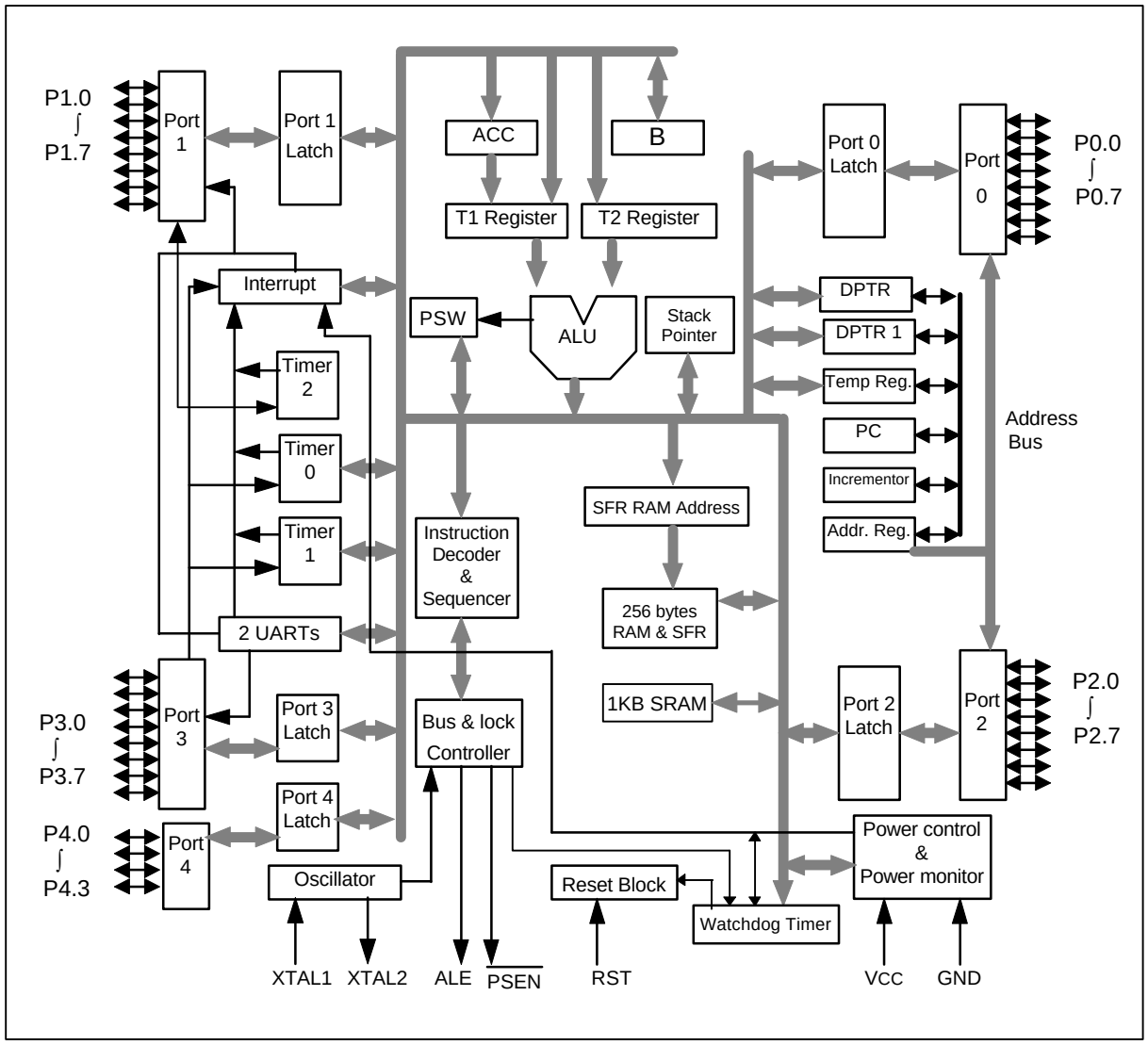

FUNCTIONAL DESCRIPTION

The W77C32 is 8052 pin compatible and instruction set compatible. It includes the resources of the standard 8052 such as four 8-bit I/O Ports, three 16-bit timer/counters, full duplex serial port and interrupt sources.

The W77C32 features a faster running and better performance 8-bit CPU with a redesigned core processor without wasted clock and memory cycles. it improves the performance not just by running at high frequency but also by reducing the machine cycle duration from the standard 8052 period of twelve clocks to four clock cycles for the majority of instructions. This improves performance by an average of 1.5 to 3 times. The W77C32 also provides dual Data Pointers (DPTRs) to speed up block data memory transfers. It can also adjust the duration of the MOVX instruction (access to off-chip data memory) between two machine cycles and nine machine cycles. This flexibility allows the

W77C32 to work efficiently with both fast and slow RAMs and peripheral devices. In addition, the W77C32 contains on-chip 1KB MOVX SRAM, the address of which is between 0000H and 03FFH. It only can be accessed by MOVX instruction; this on-chip SRAM is optional under software control.

The W77C32 is an 8052 compatible device that gives the user the features of the original 8052 device, but with improved speed and power consumption characteristics. It has the same instruction set as the 8051 family, with one addition: DEC DPTR (op-code A5H, the DPTR is decreased by 1). While the original 8051 family was designed to operate at 12 clock periods per machine cycle, the W77C32 operates at a much reduced clock rate of only 4 clock periods per machine cycle. This naturally speeds up the execution of instructions. Consequently, the W77C32 can run at a higher speed as compared to the original 8052, even if the same crystal is used. Since the W77C32 is a fully static CMOS design, it can also be operated at a lower crystal clock, giving the same throughput in terms of instruction execution, yet reducing the power consumption.

The 4 clocks per machine cycle feature in the W77C32 is responsible for a three-fold increase in execution speed. The W77C32 has all the standard features of the 8052, and has a few extra peripherals and features as well.

I/O Ports

The W77C32 has four 8-bit ports and one extra 4-bit port. Port 0 can be used as an Address/Data bus when external program is running or external memory/device is accessed by MOVC or MOVX instruction. In these cases, it has strong pull-ups and pull-downs, and does not need any external pull-ups. Otherwise it can be used as a general I/O port with open-drain circuit. Port 2 is used chiefly as the upper 8-bits of the Address bus when port 0 is used as an address/data bus. It also has strong pull-ups and pull-downs when it serves as an address bus. Port 1 and 3 act as I/O ports with alternate functions. Port 4 is only available on 44-pin PLCC/QFP package type. It serves as a general purpose I/O port as Port 1 and Port 3. The P4.0 has an alternate function $\overline{\text{WAIT}}$ which is the wait state control signal. When wait state control signal is enabled, P4.0 is input only.

Serial I/O

The W77C32 has two enhanced serial ports that are functionally similar to the serial port of the original 8052 family. However the serial ports on the W77C32 can operate in different modes in order to obtain timing similarity as well. **Note that the serial port 0 can use Timer 1 or 2 as baud rate generator, but the serial port 1 can only use Timer 1 as baud rate generator**. The serial ports have the enhanced features of Automatic Address recognition and Frame Error detection.

Timers

The W77C32 has three 16-bit timers that are functionally similar to the timers of the 8052 family. When used as timers, they can be set to run at either 4 clocks or 12 clocks per count, thus providing the user with the option of operating in a mode that emulates the timing of the original 8052. The W77C32 has an additional feature, the watchdog timer. This timer is used as a System Monitor or as a very long time period timer.

Interrupts

The Interrupt structure in the W77C32 is slightly different from that of the standard 8052. Due to the presence of additional features and peripherals, the number of interrupt sources and vectors has been increased. The W77C32 provides 12 interrupt resources with two priority level, including six external interrupt sources, timer interrupts, serial I/O interrupts and power-fail interrupt.

Data Pointers

The original 8052 had only one 16-bit Data Pointer (DPL, DPH). In the W77C32, there is an additional 16-bit Data Pointer (DPL1, DPH1). This new Data Pointer uses two SFR locations which were unused in the original 8052. In addition there is an added instruction, DEC DPTR (op-code A5H), which helps in improving programming flexibility for the user.

Power Management

Like the standard 80C52, the W77C32 also has IDLE and POWER DOWN modes of operation. The W77C32 provides a new Economy mode which allow user to switch the internal clock rate divided by either 4, 64 or 1024. In the IDLE mode, the clock to the CPU core is stopped while the timers, serial ports and interrupts clock continue to operate. In the POWER DOWN mode, all the clock are stopped and the chip operation is completely stopped. This is the lowest power consumption state.

On-chip Data SRAM

The W77C32 has 1K Bytes of data space SRAM which is read/write accessible and is memory mapped. This on-chip MOVX SRAM is reached by the MOVX instruction. It is not used for executable program memory. There is no conflict or overlap among the 256 bytes Scratchpad RAM and the 1K Bytes MOVX SRAM as they use different addressing modes and separate instructions. The on-chip MOVX SRAM is enabled by setting the DME0 bit in the PMR register. After a reset, the DME0 bit is cleared such that the on-chip MOVX SRAM is disabled, and all data memory spaces 0000H–FFFFH access to the external memory.

MEMORY ORGANIZATION

The W77C32 separates the memory into two separate sections, the Program Memory and the Data Memory. The Program Memory is used to store the instruction op-codes, while the Data Memory is used to store data or for memory mapped devices.

Program Memory

The Program Memory on the W77C32 can be up to 64Kbytes long. All instructions are fetched for execution from this memory area. The MOVC instruction can also access this memory region.

Data Memory

The W77C32 can access up to 64Kbytes of external Data Memory. This memory region is accessed by the MOVX instructions. Unlike the 8051 derivatives, the W77C32 contains on-chip 1K bytes MOVX SRAM of Data Memory, which can only be accessed by MOVX instructions. These 1K bytes of SRAM are between address 0000H and 03FFH. Access to the on-chip MOVX SRAM is optional under software control. When enabled by software, any MOVX instruction that uses this area will go to the on-chip RAM. MOVX addresses greater than 03FFH automatically go to external memory through Port 0 and 2. When disabled, the 1KB memory area is transparent to the system memory map. Any MOVX directed to the space between 0000H and FFFFH goes to the expanded bus on Port 0 and 2. This is the default condition. In addition, the W77C32 has the standard 256 bytes of on-chip Scratchpad RAM. This can be accessed either by direct addressing or by indirect addressing. There are also some Special Function Registers (SFRs), which can only be accessed by direct addressing. Since the Scratchpad RAM is only 256 bytes, it can be used only when data contents are small. In the event that larger data contents are present, two selections can be used. One is on-chip MOVX SRAM , the other is the external Data Memory. The on-chip MOVX SRAM can only be accessed by a MOVX instruction, the same as that for external Data Memory. However, the on-chip RAM has the fastest access times.

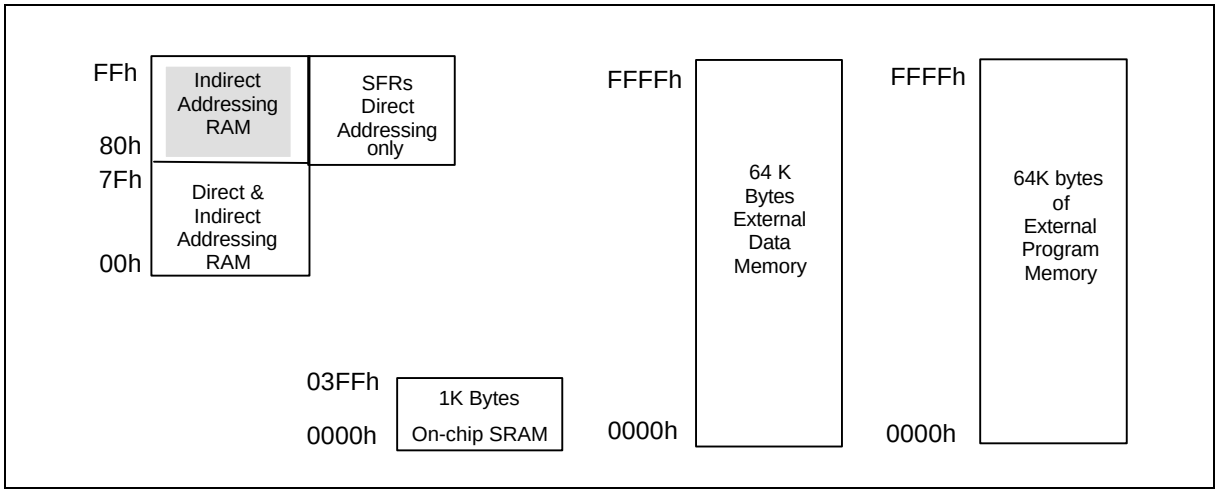

Figure 1. Memory Map

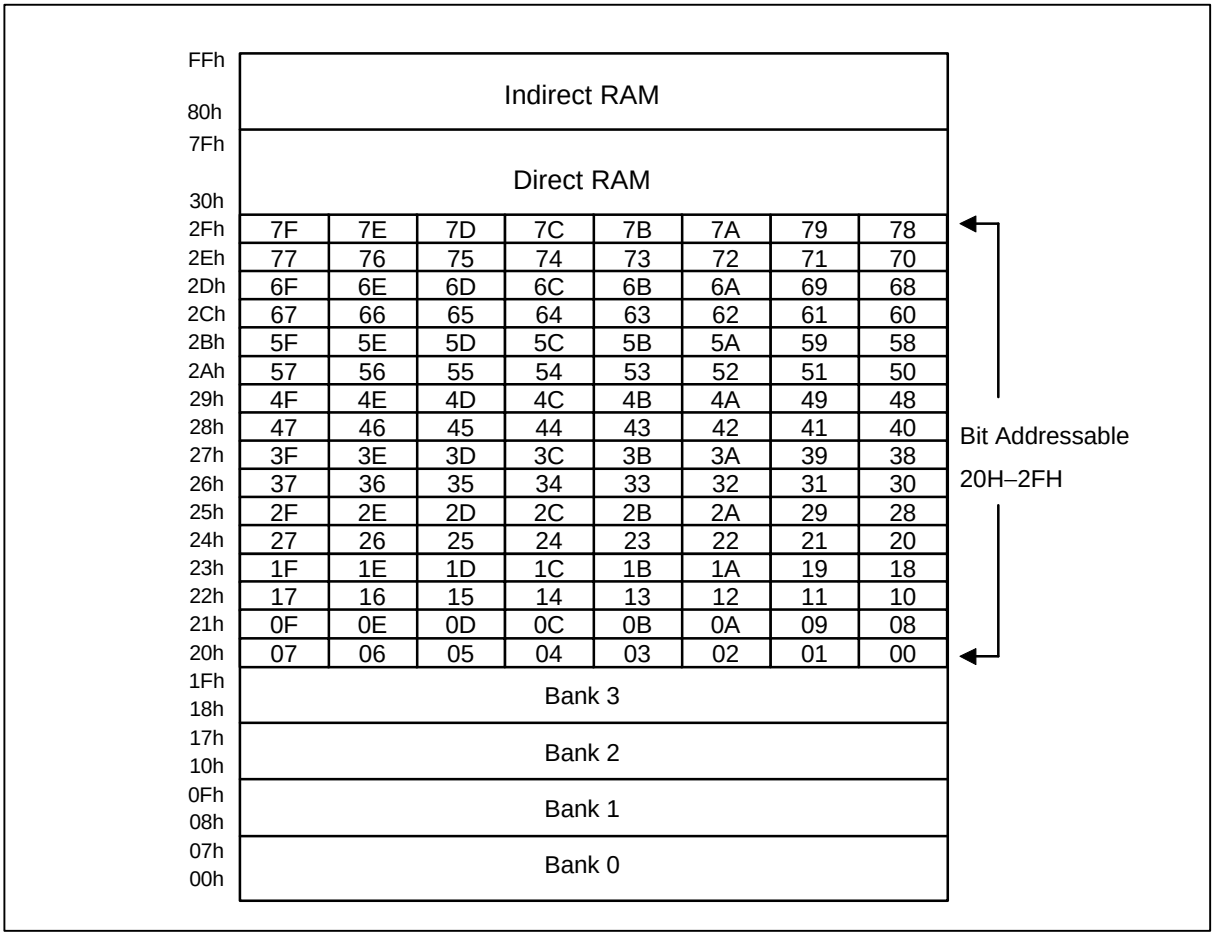

Figure 2. Scratchpad RAM / Register Addressing

Special Function Registers

The W77C32 uses Special Function Registers (SFRs) to control and monitor peripherals and their Modes.

The SFRs reside in the register locations 80-FFh and are accessed by direct addressing only. Some of the SFRs are bit addressable. This is very useful in cases where one wishes to modify a particular bit without changing the others. The SFRs that are bit addressable are those whose addresses end in 0 or 8. The W77C32 contains all the SFRs present in the standard 8052. However, some additional SFRs have been added. In some cases unused bits in the original 8052 have been given new functions. The list of SFRs is as follows. The table is condensed with eight locations per row. Empty locations indicate that there are no registers at these addresses. When a bit or register is not implemented, it will read high.

Table 1. Special Function Register Location Table

F8	EIP							
F0	B							
E8	EIE							
E0	ACC							
D8	WDCON							
D0	PSW							
C8	T2CON	T2MOD	RCAP2L	RCAP2H	TL2	TH2		
C0	SCON1	SBUF1	ROMMAP		PMR	STATUS		TA
B8	IP	SADEN	SADEN1					
B0	P3							
A8	IE	SADDR	SADDR1					
A0	P2					P4		
98	SCON0	SBUF						
90	P1	EXIF						
88	TCON	TMOD	TL0	TL1	TH0	TH1	CKCON	
80	P0	SP	DPL	DPH	DPL1	DPH1	DPS	PCON

Note: The SFRs in the column with dark borders are bit-addressable.

A brief description of the SFRs now follows.

Port 0

Bit:	7	6	5	4	3	2	1	0
	P0.7	P0.6	P0.5	P0.4	P0.3	P0.2	P0.1	P0.0

Mnemonic: P0 Address: 80h

Port 0 is an open-drain bi-directional I/O port. This port also provides a multiplexed low order address/data bus during accesses to external memory.

Stack Pointer

Bit:	7	6	5	4	3	2	1	0
	SP.7	SP.6	SP.5	SP.4	SP.3	SP.2	SP.1	SP.0

Mnemonic: SP Address: 81h

The Stack Pointer stores the Scratchpad RAM address where the stack begins. In other words, it always points to the top of the stack.

Data Pointer Low

Bit:	7	6	5	4	3	2	1	0
	DPL.7	DPL.6	DPL.5	DPL.4	DPL.3	DPL.2	DPL.1	DPL.0

Mnemonic: DPL Address: 82h

This is the low byte of the standard 8052 16-bit data pointer.

Data Pointer High

Bit:	7	6	5	4	3	2	1	0
	DPH.7	DPH.6	DPH.5	DPH.4	DPH.3	DPH.2	DPH.1	DPH.0

Mnemonic: DPH Address: 83h

This is the high byte of the standard 8052 16-bit data pointer.

Data Pointer Low1

Bit:	7	6	5	4	3	2	1	0
	DPL1.7	DPL1.6	DPL1.5	DPL1.4	DPL1.3	DPL1.2	DPL1.1	DPL1.0

Mnemonic: DPL1 Address: 84h

This is the low byte of the new additional 16-bit data pointer that has been added to the W77C32. The user can switch between DPL, DPH and DPL1, DPH1 simply by setting register DPS = 1. The instructions that use DPTR will now access DPL1 and DPH1 in place of DPL and DPH. If they are not required they can be used as conventional register locations by the user.

Data Pointer High1

Bit:	7	6	5	4	3	2	1	0
	DPH1.7	DPH1.6	DPH1.5	DPH1.4	DPH1.3	DPH1.2	DPH1.1	DPH1.0

Mnemonic: DPH1 Address: 85h

This is the high byte of the new additional 16-bit data pointer that has been added to the W77C32. The user can switch between DPL, DPH and DPL1, DPH1 simply by setting register DPS = 1. The instructions that use DPTR will now access DPL1 and DPH1 in place of DPL and DPH. If they are not required they can be used as conventional register locations by the user.

Data Pointer Select

Bit:	7	6	5	4	3	2	1	0
	-	-	-	-	-	-	-	DPS.0

Mnemonic: DPS Address: 86h

DPS.0: This bit is used to select either the DPL,DPH pair or the DPL1,DPH1 pair as the active Data Pointer. When set to 1, DPL1,DPH1 will be selected, otherwise DPL,DPH will be selected.

DPS.1-7:These bits are reserved, but will read 0.

Power Control

Bit:	7	6	5	4	3	2	1	0
	SM0D	SMOD0	-	-	GF1	GF0	PD	IDL

Mnemonic: PCON Address: 87h

SMOD : This bit doubles the serial port baud rate in mode 1, 2, and 3 when set to 1.

SMOD0: Framing Error Detection Enable: When SMOD0 is set to 1, then SCON.7(SCON1.7) indicates a Frame Error and acts as the FE(FE_1) flag. When SMOD0 is 0, then SCON.7(SCON1.7) acts as per the standard 8052 function.

GF1-0: These two bits are general purpose user flags.

PD: Setting this bit causes the W77C32 to go into the POWER DOWN mode. In this mode all the clocks are stopped and program execution is frozen.

IDL: Setting this bit causes the W77C32 to go into the IDLE mode. In this mode the clocks to the CPU are stopped, so program execution is frozen. But the clock to the serial, timer and interrupt blocks is not stopped, and these blocks continue operating.

Timer Control

Bit:	7	6	5	4	3	2	1	0
	TF1	TR1	TF0	TR0	IE1	IT	IE0	IT

Mnemonic: TCON Address: 88h

TF1: Timer 1 overflow flag: This bit is set when Timer 1 overflows. It is cleared automatically when the program does a timer 1 interrupt service routine. Software can also set or clear this bit.

TR1: Timer 1 run control: This bit is set or cleared by software to turn timer/counter on or off.

TF0: Timer 0 overflow flag: This bit is set when Timer 0 overflows. It is cleared automatically when the program does a timer 0 interrupt service routine. Software can also set or clear this bit.

TR0: Timer 0 run control: This bit is set or cleared by software to turn timer/counter on or off.

IE1: Interrupt 1 edge detect: Set by hardware when an edge/level is detected on $\overline{INT1}$. This bit is cleared by hardware when the service routine is vectored to only if the interrupt was edge triggered. Otherwise it follows the pin.

IT1: Interrupt 1 type control: Set/cleared by software to specify falling edge/ low level triggered external inputs.

IE0: Interrupt 0 edge detect: Set by hardware when an edge/level is detected on $\overline{INT0}$. This bit is cleared by hardware when the service routine is vectored to only if the interrupt was edge triggered. Otherwise it follows the pin.

IT0: Interrupt 0 type control: Set/cleared by software to specify falling edge/ low level triggered external inputs.

Timer Mode Control

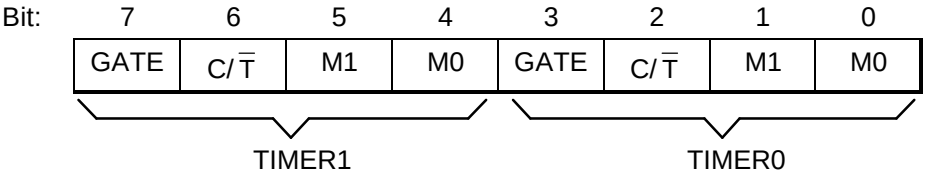

Mnemonic: TMOD Address: 89h

GATE: Gating control: When this bit is set, Timer/counter x is enabled only while $\overline{INTx}$ pin is high and TRx control bit is set. When cleared, Timer x is enabled whenever TRx control bit is set.

C/$\overline{T}$: Timer or Counter Select: When cleared, the timer is incremented by internal clocks. When set, the timer counts high-to-low edges of the Tx pin.

M1, M0: Mode Select bits:

M1	M0	Mode
0	0	Mode 0: 8-bits with 5-bit prescale.
0	1	Mode 1: 18-bits, no prescale.
1	0	Mode 2: 8-bits with auto-reload from THx
1	1	Mode 3: (Timer 0) TL0 is an 8-bit timer/counter controlled by the standard Timer 0 control bits. TH0 is a 8-bit timer only controlled by Timer 1 control bits. (Timer 1) Timer/counter is stopped.

Timer 0 LSB

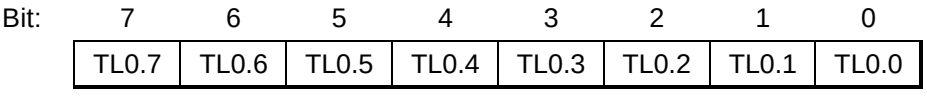

Mnemonic: TL0 Address: 8Ah

TL0.7-0:Timer 0 LSB

Timer 1 LSB

Bit:	7	6	5	4	3	2	1	0
	TL1.7	TL1.6	TL1.5	TL1.4	TL1.3	TL1.2	TL1.1	TL1.0

Mnemonic: TL1 Address: 8Bh

TL1.7-0:Timer 1 LSB

Timer 0 MSB

Bit:	7	6	5	4	3	2	1	0
	TH0.7	TH0.6	TH0.5	TH0.4	TH0.3	TH0.2	TH0.1	TH0.0

Mnemonic: TH0 Address: 8Ch

TH0.7-0:Timer 0 MSB

Timer 1 MSB

Bit:	7	6	5	4	3	2	1	0
	TH1.7	TH1.6	TH1.5	TH1.4	TH1.3	TH1.2	TH1.1	TH1.0

Mnemonic: TH1 Address: 8Dh

TH1.7-0:Timer 1 MSB

Clock Control

Bit:	7	6	5	4	3	2	1	0
	WD1	WD0	T2M	T1M	T0M	MD2	MD1	MD0

Mnemonic: CKCON Address: 8Eh

WD1-0: Watchdog timer mode select bits: These bits determine the time-out period for the watchdog timer. In all four time-out options the reset time-out is 512 clocks more than the interrupt time-out period.

WD1	WD0	Interrupt time-out	Reset time-out
0	0	2^{17}	$2^{17} + 512$
0	1	2^{20}	$2^{20} + 512$
1	0	2^{23}	$2^{23} + 512$
1	1	2^{26}	$2^{26} + 512$

T2M: Timer 2 clock select: When T2M is set to 1, timer 2 uses a divide by 4 clock, and when set to 0 it uses a divide by 12 clock

T1M: Timer 1 clock select: When T1M is set to 1, timer 1 uses a divide by 4 clock, and when set to 0 it uses a divide by 12 clock.

T0M: Timer 0 clock select: When T0M is set to 1, timer 0 uses a divide by 4 clock, and when set to 0 it uses a divide by 12 clock.

MD2-0: Stretch MOVX select bits: These three bits are used to select the stretch value for the MOVX instruction. Using a variable MOVX length enables the user to access slower external memory devices or peripherals without the need for external circuits. The $\overline{RD}$ or $\overline{WR}$ strobe will be stretched by the selected interval. When accessing the on-chip SRAM, the MOVX instruction is always in 2 machine cycles regardless of the stretch setting. By default, the stretch has value of 1. If the user needs faster accessing, then a stretch value of 0 should be selected.

MD2	MD1	MD0	Stretch value	MOVX duration
0	0	0	0	2 machine cycles
0	0	1	1	3 machine cycles *(Default)*
0	1	0	2	4 machine cycles
0	1	1	3	5 machine cycles
1	0	0	4	6 machine cycles
1	0	1	5	7 machine cycles
1	1	0	6	8 machine cycles
1	1	1	7	9 machine cycles

Port 1

Bit:	7	6	5	4	3	2	1	0
	P1.7	P1.6	P1.5	P1.4	P1.3	P1.2	P1.1	P1.0

Mnemonic: P1 Address: 90h

P1.7-0: General purpose I/O port. Most instructions will read the port pins in case of a port read access, however in case of read-modify-write instructions, the port latch is read. Some pins also have alternate input or output functions. This alternate functions are described below:

P1.0 : T2	External I/O for Timer/Counter 2
P1.1 : T2EX	Timer/Counter 2 Capture/Reload Trigger
P1.2 : RXD1	Serial Port 1 Receive
P1.3 : TXD1	Serial Port 1 Transmit
P1.4 : INT2	External Interrupt 2
P1.5 : $\overline{INT3}$	External Interrupt 3
P1.6 : INT4	External Interrupt 4
P1.7 : $\overline{INT5}$	External Interrupt 5

External Interrupt Flag

Bit:	7	6	5	4	3	2	1	0
	IE5	IE4	IE3	IE2	XT/RG	$\overline{RGMD}$	RGSL	BGS

Mnemonic: EXIF Address: 91h

IE5: External Interrupt 5 flag. Set by hardware when a falling edge is detected on $\overline{INT5}$.

IE4: External Interrupt 4 flag. Set by hardware when a rising edge is detected on INT4.

IE3: External Interrupt 3 flag. Set by hardware when a falling edge is detected on $\overline{INT5}$.

IE2: External Interrupt 2 flag. Set by hardware when a rising edge is detected on INT2.

XT/$\overline{RG}$ RG: Crystal/RC Oscillator Select. Setting this bit selects crystal or external clock as system clock source. Clearing this bit selects the on-chip RC oscillator as clock source. XTUP(STATUS.4) must be set to 1 and XTOFF (PMR.3) must be cleared before this bit can be set. Attempts to set this bit without obeying these conditions will be ignored. This bit is set to 1 after a power-on reset and unchanged by other forms of reset.

RGMD: RC Mode Status. This bit indicates the current clock source of microcontroller. When cleared, CPU is operating from the external crystal or oscillator. When set, CPU is operating from the on-chip RC oscillator. This bit is cleared to 0 after a power-on reset and unchanged by other forms of reset.

RGSL: RC Oscillator Select. This bit selects the clock source following a resume from Power Down Mode. Setting this bit allows device operating from RC oscillator when a resume from Power Down Mode. When this bit is cleared, the device will hold operation until the crystal oscillator has warmed-up following a resume from Power Down Mode. This bit is cleared to 0 after a power-on reset and unchanged by other forms of reset.

Serial Port Control

Bit:	7	6	5	4	3	2	1	0
	SM0/FE	SM1	SM2	REN	TB8	RB8	TI	RI

Mnemonic: SCON Address: 98h

SM0/FE: Serial port 0, Mode 0 bit or Framing Error Flag: The SMOD0 bit in PCON SFR determines whether this bit acts as SM0 or as FE. The operation of SM0 is described below. When used as FE, this bit will be set to indicate an invalid stop bit. This bit must be manually cleared in software to clear the FE condition.

SM1: Serial port Mode bit 1:

SM0	SM1	Mode	Description	Length	Baud rate
0	0	0	Synchronous	8	4/12 Tclk
0	1	1	Asynchronous	10	variable
1	0	2	Asynchronous	11	64/32 Tclk
1	1	3	Asynchronous	11	variable

SM2: Multiple processors communication. Setting this bit to 1 enables the multiprocessor communication feature in mode 2 and 3. In mode 2 or 3, if SM2 is set to 1, then RI will not be activated if the received 9th data bit (RB8) is 0. In mode 1, if SM2 = 1, then RI will not be activated if a valid stop bit was not received. In mode 0, the SM2 bit controls the serial port clock. If set to 0, then the serial port runs at a divide by 12 clock of the oscillator. This gives compatibility with the standard 8052. When set to 1, the serial clock become divide by 4 of the oscillator clock. This results in faster synchronous serial communication.

REN: Receive enable: When set to 1 serial reception is enabled, otherwise reception is disabled.

TB8: This is the 9th bit to be transmitted in modes 2 and 3. This bit is set and cleared by software as desired.

RB8: In modes 2 and 3 this is the received 9th data bit. In mode 1, if SM2 = 0, RB8 is the stop bit that was received. In mode 0 it has no function.

TI: Transmit interrupt flag: This flag is set by hardware at the end of the 8th bit time in mode 0, or at the beginning of the stop bit in all other modes during serial transmission. This bit must be cleared by software.

RI: Receive interrupt flag: This flag is set by hardware at the end of the 8th bit time in mode 0, or halfway through the stop bits time in the other modes during serial reception. However the restrictions of SM2 apply to this bit. This bit can be cleared only by software

Serial Data Buffer

Bit:	7	6	5	4	3	2	1	0
	SBUF.7	SBUF.6	SBUF.5	SBUF.4	SBUF.3	SBUF.2	SBUF.1	SBUF.0

Mnemonic: SBUF Address: 99h

SBUF.7-0: Serial data on the serial port 0 is read from or written to this location. It actually consists of two separate internal 8-bit registers. One is the receive resister, and the other is the transmit buffer. Any read access gets data from the receive data buffer, while write access is to the transmit data buffer.

Port 2

Bit:	7	6	5	4	3	2	1	0
	P2.7	P2.6	P2.5	P2.4	P2.3	P2.2	P2.1	P2.0

Mnemonic: P2 Address: A0h

P2.7-0: Port 2 is a bi-directional I/O port with internal pull-ups. This port also provides the upper address bits for accesses to external memory.

Port 4

Bit:	7	6	5	4	3	2	1	0
	-	-	-	-	P4.3	P4.2	P4.1	P4.0

Mnemonic: P4 Address: A5h

P4.3-0: Port 4 is a bi-directional I/O port with internal pull-ups.

Interrupt Enable

Bit:	7	6	5	4	3	2	1	0
	EA	ES1	ET2	ES	ET1	EX1	ET0	EX0

Mnemonic: IE Address: A8h

EA: Global enable. Enable/disable all interrupts except for PFI.
ES1: Enable Serial Port 1 interrupt.
ET2: Enable Timer 2 interrupt.
ES: Enable Serial Port 0 interrupt.
ET1: Enable Timer 1 interrupt
EX1: Enable external interrupt 1
ET0: Enable Timer 0 interrupt
EX0: Enable external interrupt 0

Slave Address

Bit:	7	6	5	4	3	2	1	0

Mnemonic: SADDR Address: A9h

SADDR: The SADDR should be programmed to the given or broadcast address for serial port 0 to which the slave processor is designated.

Slave Address 1

Bit:	7	6	5	4	3	2	1	0

Mnemonic: SADDR1 Address: AAh

SADDR1: The SADDR1 should be programmed to the given or broadcast address for serial port 1 to which the slave processor is designated.

Port 3

Bit:	7	6	5	4	3	2	1	0
	P3.7	P3.6	P3.5	P3.4	P3.3	P3.2	P3.1	P3.0

Mnemonic: P3 Address: B0h

P3.7-0: General purpose I/O port. Each pin also has an alternate input or output function. The alternate functions are described below.

P3.7	$\overline{RD}$	Strobe for read from external RAM
P3.6	$\overline{WR}$	Strobe for write to external RAM
P3.5	T1	Timer/counter 1 external count input
P3.4	T0	Timer/counter 0 external count input
P3.3	$\overline{INT1}$	External interrupt 1
P3.2	$\overline{INT0}$	External interrupt 0
P3.1	TxD	Serial port 0 output
P3.0	RxD	Serial port 0 input

Interrupt Priority

Bit:	7	6	5	4	3	2	1	0
	-	PS1	PT2	PS	PT1	PX1	PT0	PX0

Mnemonic: IP Address: B8h

IP.7: This bit is un-implemented and will read high.

PS1: This bit defines the Serial port 1 interrupt priority. PS = 1 sets it to higher priority level.

PT2: This bit defines the Timer 2 interrupt priority. PT2 = 1 sets it to higher priority level.

PS: This bit defines the Serial port 0 interrupt priority. PS = 1 sets it to higher priority level.

PT1: This bit defines the Timer 1 interrupt priority. PT1 = 1 sets it to higher priority level.
PX1: This bit defines the External interrupt 1 priority. PX1 = 1 sets it to higher priority level.
PT0: This bit defines the Timer 0 interrupt priority. PT0 = 1 sets it to higher priority level.
PX0: This bit defines the External interrupt 0 priority. PX0 = 1 sets it to higher priority level.

Slave Address Mask Enable

Bit:	7	6	5	4	3	2	1	0

Mnemonic: SADEN Address: B9h

SADEN: This register enables the Automatic Address Recognition feature of the Serial port 0. When a bit in the SADEN is set to 1, the same bit location in SADDR will be compared with the incoming serial data. When SADEN.n is 0, then the bit becomes a "don't care" in the comparison. This register enables the Automatic Address Recognition feature of the Serial port 0. When all the bits of SADEN are 0, interrupt will occur for any incoming address.

Slave Address Mask Enable 1

Bit:	7	6	5	4	3	2	1	0

Mnemonic: SADEN1 Address: BAh

SADEN1: This register enables the Automatic Address Recognition feature of the Serial port 1. When a bit in the SADEN1 is set to 1, the same bit location in SADDR1 will be compared with the incoming serial data. When SADEN1.n is 0, then the bit becomes a "don't care" in the comparison. This register enables the Automatic Address Recognition feature of the Serial port 1. When all the bits of SADEN1 are 0, interrupt will occur for any incoming address.

Serial Port Control 1

Bit:	7	6	5	4	3	2	1	0
	SM0_1/FE_1	SM1_1	SM2_1	REN_1	TB8_1	RB8_1	TI_1	RI_1

Mnemonic: SCON1 Address: C0h

SM0_1/FE_1: Serial port 1, Mode 0 bit or Framing Error Flag 1: The SMOD0 bit in PCON SFR determines whether this bit acts as SM0_1 or as FE_1. the operation of SM0_1 is described below. When used as FE_1, this bit will be set to indicate an invalid stop bit. This bit must be manually cleared in software to clear the FE_1 condition.

SM1_1: Serial port 1 Mode bit 1:

SM0_1	SM1_1	Mode	Description	Length	Baud rate
0	0	0	Synchronous	8	4/12 Tclk
0	1	1	Asynchronous	10	variable
1	0	2	Asynchronous	11	64/32 Tclk
1	1	3	Asynchronous	11	variable

SM2_1: Multiple processors communication. Setting this bit to 1 enables the multiprocessor communication feature in mode 2 and 3. In mode 2 or 3, if SM2_1 is set to 1, then RI_1 will not be activated if the received 9th data bit (RB8_1) is 0. In mode 1, if SM2_1 = 1, then RI_1 will not be activated if a valid stop bit was not received. In mode 0, the SM2_1 bit controls the serial port 1 clock. If set to 0, then the serial port 1 runs at a divide by 12 clock of the oscillator. This gives compatibility with the standard 8052. When set to 1, the serial clock become divide by 4 of the oscillator clock. This results in faster synchronous serial communication.

REN_1: Receive enable: When set to 1 serial reception is enabled, otherwise reception is disabled.

TB8_1: This is the 9th bit to be transmitted in modes 2 and 3. This bit is set and cleared by software as desired.

RB8_1: In modes 2 and 3 this is the received 9th data bit. In mode 1, if SM2_1 = 0, RB8_1 is the stop bit that was received. In mode 0 it has no function.

TI_1: Transmit interrupt flag: This flag is set by hardware at the end of the 8th bit time in mode 0, or at the beginning of the stop bit in all other modes during serial transmission. This bit must be cleared by software.

RI_1: Receive interrupt flag: This flag is set by hardware at the end of the 8th bit time in mode 0, or halfway through the stop bits time in the other modes during serial reception. However the restrictions of SM2_1 apply to this bit. This bit can be cleared only by software

Serial Data Buffer 1

Bit:	7	6	5	4	3	2	1	0
	SBUF1.7	SBUF1.6	SBUF1.5	SBUF1.4	SBUF1.3	SBUF1.2	SBUF1.1	SBUF1.0

Mnemonic: SBUF1 Address: C1h

SBUF1.7-0: Serial data of the serial port 1 is read from or written to this location. It actually consists of two separate 8-bit registers. One is the receive resister, and the other is the transmit buffer. Any read access gets data from the receive data buffer, while write accesses are to the transmit data buffer.

ROMMAP

Bit:	7	6	5	4	3	2	1	0
	WS	1	-	-	-	-	-	-

Mnemonic: ROMMAP Address: C2h

WS: Wait State Signal Enable. Setting this bit enables the $\overline{\text{WAIT}}$ signal on P4.0. The device will sample the wait state control signal $\overline{\text{WAIT}}$ via P4.0 during MOVX instruction. This bit is time access protected

Power Management Register

Bit:	7	6	5	4	3	2	1	0
	CD1	CD0	SWB	-	XTOFF	ALE-OFF	-	DME0

Mnemonic: PMR Address: C4h

CD1,CD0: Clock Divide Control. These bit selects the number of clocks required to generate one machine cycle. There are three modes including divide by 4, 64 or 1024. Switching between modes must first go back devide by 4 mode. For instance, to go from 64 to 1024 clocks/machine cycle the device must first go from 64 to 4 clocks/machine cycle, and then from 4 to 1024 clocks/machine cycle.

CD1,	CD0	Clocks/machine cycle
0	0	Reserved
0	1	4
1	0	64
1	1	1024

SWB: Switchback Enable. Setting this bit allows an enabled external interrupt or serial port activity to force the CD1,CD0 to divide by 4 state (0,1). The device will switch modes at the start of the jump to interrupt service routine while a external interrupt is enabled and actually recongnized by microcontroller. While a serial port reception, the switchback occurs at the start of the instruction following the falling edge of the start bit.

XTOFF: Crystal Oscillator Disable. Setting this bit disables the external crystal oscillator. This bit can only be set to 1 while the microcontroller is operating from the RC oscillator. Clearing this bit restarts the crystal oscillator, the XTUP (STATUS.4) bit will be set after crystal oscillator warmed-up has completed.

ALEOFF: This bit disables the expression of the ALE signal on the device pin during all on-board program and data memory accesses. External memory accesses will automatically enable ALE independent of ALEOFF.

0 = ALE expression is enable; 1 = ALE expression is disable

DME0: This bit determines the on-chip MOVX SRAM to be enabled or disabled.

Set this bit to 1 will enable the on-chip 1KB MOVX SRAM.

Status Register

Bit:	7	6	5	4	3	2	1	0
	PIP	HIP	LIP	XTUP	SPTA1	SPRA1	SPTA0	SPRA0

Mnemonic: STATUS Address: C5h

PIP: Power Fail Priority Interrupt Status. When set, this bit indicates that power-fail interrupt is currently serviced. It will be cleared when program executes the corresponding RETI instruction.

HIP: High Priority Interrupt Status. When set, it indicates that software is servicing a high priority interrupt. This bit will be cleared when the program executes the corresponding RETI instruction.

LIP: Low Priority Interrupt Status. When set, it indicates that software is servicing a low priority interrupt. This bit will be cleared when the program executes the corresponding RETI instruction.

XTUP: Crystal Oscillator Warm-up Status. when set, this bit indicates CPU has detected clock to be ready. Each time the crystal oscillator is restarted by exit from power down mode or the XTOFF bit is set, hardware will clear this bit. This bit is set to 1 after a power-on reset. When

this bit is cleared, it prevents software from setting the XT/$\overline{RG}$ bit to enable CPU operation from crystal oscillator.

SPTA1: Serial Port 1 Transmit Activity. This bit is set during serial port 1 is currently transmitting data. It is cleared when TI_1 bit is set by hardware. Changing the Clock Divide Control bits CD0,CD1 will be ignored when this bit is set to 1 and SWB = 1.

SPRA1: Serial Port 1 Receive Activity. This bit is set during serial port 1 is currently receiving a data. It is cleared when RI_1 bit is set by hardware. Changing the Clock Divide Control bits CD0,CD1 will be ignored when this bit is set to 1 and SWB = 1.

SPTA0: Serial Port 0 Transmit Activity. This bit is set during serial port 0 is currently transmitting data. It is cleared when TI bit is set by hardware. Changing the Clock Divide Control bits CD0,CD1 will be ignored when this bit is set to 1 and SWB = 1.

SPRA0: Serial Port 0 Receive Activity. This bit is set during serial port 0 is currently receiving a data. It is cleared when RI bit is set by hardware. Changing the Clock Divide Control bits CD0,CD1 will be ignored when this bit is set to 1 and SWB = 1.

Timed Access

Bit:	7	6	5	4	3	2	1	0
	TA.7	TA.6	TA.5	TA.4	TA.3	TA.2	TA.1	TA.0

Mnemonic: TA Address: C7h

TA: The Timed Access register controls the access to protected bits. To access protected bits, the user must first write AAH to the TA. This must be immediately followed by a write of 55H to TA. Now a window is opened in the protected bits for three machine cycles, during which the user can write to these bits.

Timer 2 Control

Bit:	7	6	5	4	3	2	1	0
	TF2	EXF2	RCLK	TCLK	EXEN2	TR2	C/$\overline{T2}$	CP/$\overline{RL2}$

Mnemonic: T2CON Address: C8h

TF2: Timer 2 overflow flag: This bit is set when Timer 2 overflows. It is also set when the count is equal to the capture register in down count mode. It can be set only if RCLK and TCLK are both 0. It is cleared only by software. Software can also set or clear this bit.

EXF2: Timer 2 External Flag: A negative transition on the T2EX pin (P1.1) or timer 2 overflow will cause this flag to set based on the CP/$\overline{RL2}$, EXEN2 and DCEN bits. If set by a negative transition, this flag must be cleared by software. Setting this bit in software or detection of a negative transition on T2EX pin will force a timer interrupt if enabled.

RCLK: Receive Clock Flag: This bit determines the serial port 0 time-base when receiving data in serial modes 1 or 3. If it is 0, then timer 1 overflow is used for baud rate generation, otherwise timer 2 overflow is used. Setting this bit forces timer 2 in baud rate generator mode.

TCLK: Transmit Clock Flag: This bit determines the serial port 0 time-base when transmitting data in modes 1 and 3. If it is set to 0, the timer 1 overflow is used to generate the baud rate clock, otherwise timer 2 overflow is used. Setting this bit forces timer 2 in baud rate generator mode.

EXEN2: Timer 2 External Enable. This bit enables the capture/reload function on the T2EX pin if Timer 2 is not generating baud clocks for the serial port. If this bit is 0, then the T2EX pin will

be ignored, otherwise a negative transition detected on the T2EX pin will result in capture or reload.

TR2: Timer 2 Run Control. This bit enables/disables the operation of timer 2. Clearing this bit will halt the timer 2 and preserve the current count in TH2, TL2.

C/$\overline{T2}$: Counter/Timer Select. This bit determines whether timer 2 will function as a timer or a counter. Independent of this bit, the timer will run at 2 clocks per tick when used in baud rate generator mode. If it is set to 0, then timer 2 operates as a timer at a speed depending on T2M bit (CKCON.5), otherwise it will count negative edges on T2 pin.

CP/$\overline{RL2}$: Capture/Reload Select. This bit determines whether the capture or reload function will be used for timer 2. If either RCLK or TCLK is set, this bit will be ignored and the timer will function in an auto-reload mode following each overflow. If the bit is 0 then auto-reload will occur when timer 2 overflows or a falling edge is detected on T2EX pin if EXEN2 = 1.

If this bit is 1, then timer 2 captures will occur when a falling edge is detected on T2EX pin if EXEN2 = 1.

Timer 2 Mode Control

Bit:	7	6	5	4	3	2	1	0
	HC5	HC4	HC3	HC2	T2CR	-	T2OE	DCEN

Mnemonic: T2MOD Address: C9h

HC5: Hardware Clear $\overline{INT5}$ flag. Setting this bit allows the flag of external interrupt 5 to be automatically cleared by hardware while entering the interrupt service routine.

HC4: Hardware Clear INT4 flag. Setting this bit allows the flag of external interrupt 4 to be automatically cleared by hardware while entering the interrupt service routine.

HC3: Hardware Clear $\overline{INT3}$ flag. Setting this bit allows the flag of external interrupt 3 to be automatically cleared by hardware while entering the interrupt service routine.

HC3: Hardware Clear INT2 flag. Setting this bit allows the flag of external interrupt 3 to be automatically cleared by hardware while entering the interrupt service routine.

T2CR: Timer 2 Capture Reset. In the Timer 2 Capture Mode this bit enables/disables hardware automatically reset Timer 2 while the value in TL2 and TH2 have been transferred into the capture register.

T2OE: Timer 2 Output Enable. This bit enables/disables the Timer 2 clock out function.

DCEN: Down Count Enable: This bit, in conjunction with the T2EX pin, controls the direction that timer 2 counts in 16-bit auto-reload mode.

Timer 2 Capture LSB

Bit:	7	6	5	4	3	2	1	0
	RCAP2L.7	RCAP2L.6	RCAP2L.5	RCAP2L.4	RCAP2L.3	RCAP2L.2	RCAP2L.1	RCAP2L.0

Mnemonic: RCAP2L Address: CAh

RCAP2L: This register is used to capture the TL2 value when a timer 2 is configured in capture mode. RCAP2L is also used as the LSB of a 16-bit reload value when timer 2 is configured in auto-reload mode.

Timer 2 Capture MSB

Bit:	7	6	5	4	3	2	1	0
	RCAP2H.7	RCAP2H.6	RCAP2H.5	RCAP2H.4	RCAP2H.3	RCAP2H.2	RCAP2H.1	RCAP2H.0

Mnemonic: RCAP2H Address: CBh

RCAP2H: This register is used to capture the TH2 value when a timer 2 is configured in capture mode. RCAP2H is also used as the MSB of a 16-bit reload value when timer 2 is configured in auto-reload mode.

Timer 2 LSB

Bit:	7	6	5	4	3	2	1	0
	TL2.7	TL2.6	TL2.5	TL2.4	TL2.3	TL2.2	TL2.1	TL2.0

Mnemonic: TL2 Address: CCh

TL2: Timer 2 LSB

Timer 2 MSB

Bit:	7	6	5	4	3	2	1	0
	TH2.7	TH2.6	TH2.5	TH2.4	TH2.3	TH2.2	TH2.1	TH2.0

Mnemonic: TH2 Address: CDh

TH2: Timer 2 MSB

Program Status Word

Bit:	7	6	5	4	3	2	1	0
	CY	AC	F0	RS1	RS0	OV	F1	P

Mnemonic: PSW Address: D0h

CY: Carry flag: Set for an arithmetic operation which results in a carry being generated from the ALU. It is also used as the accumulator for the bit operations.

AC: Auxiliary carry: Set when the previous operation resulted in a carry from the high order nibble.

F0: User flag 0: General purpose flag that can be set or cleared by the user.

RS.1-0: Register bank select bits:

RS1	RS0	Register bank	Address
0	0	0	00-07h
0	1	1	08-0Fh
1	0	2	10-17h
1	1	3	18-1Fh

OV: Overflow flag: Set when a carry was generated from the seventh bit but not from the 8th bit as a result of the previous operation, or vice-versa.

F1: User Flag 1: General purpose flag that can be set or cleared by the user by software

P: Parity flag: Set/cleared by hardware to indicate odd/even number of 1's in the accumulator.

Watchdog Control

Bit:	7	6	5	4	3	2	1	0
	SMOD_1	POR	-	-	WDIF	WTRF	EWT	RWT

Mnemonic: WDCON Address: D8h

SMOD_1:This bit doubles the Serial Port 1 baud rate in mode 1, 2, and 3 when set to 1.

POR: Power-on reset flag. Hardware will set this flag on a power up condition. This flag can be read or written by software. A write by software is the only way to clear this bit once it is set.

WDIF: Watchdog Timer Interrupt Flag. If the watchdog interrupt is enabled, hardware will set this bit to indicate that the watchdog interrupt has occurred. If the interrupt is not enabled, then this bit indicates that the time-out period has elapsed. This bit must be cleared by software.

WTRF: Watchdog Timer Reset Flag. Hardware will set this bit when the watchdog timer causes a reset. Software can read it but must clear it manually. A power-fail reset will also clear the bit. This bit helps software in determining the cause of a reset. If EWT = 0, the watchdog timer will have no affect on this bit.

EWT: Enable Watchdog timer Reset. Setting this bit will enable the Watchdog timer Reset function.

RWT: Reset Watchdog Timer. This bit helps in putting the watchdog timer into a know state. It also helps in resetting the watchdog timer before a time-out occurs. Failing to set the EWT before time-out will cause an interrupt, if EWDI (EIE.4) is set, and 512 clocks after that a watchdog timer reset will be generated if EWT is set. This bit is self-clearing by hardware.

The WDCON SFR is set to a 0x0x0xx0b on an external reset. WTRF is set to a 1 on a Watchdog timer reset, but to a 0 on power on/down resets. WTRF is not altered by an external reset. POR is set to 1 by a power-on reset. EWT is set to 0 on a Power-on reset and unaffected by other resets.

All the bits in this SFR have unrestricted read access. POR, EWT, WDIF and RWT require Timed Access procedure to write. The remaining bits have unrestricted write accesses.

Accumulator

Bit:	7	6	5	4	3	2	1	0
	ACC.7	ACC.6	ACC.5	ACC.4	ACC.3	ACC.2	ACC.1	ACC.0

Mnemonic: ACC Address: E0h

ACC.7-0:The A (or ACC) register is the standard 8052 accumulator.

Extended Interrupt Enable

Bit:	7	6	5	4	3	2	1	0
	-	-	-	EWDI	EX5	EX4	EX3	EX2

Mnemonic: EIE Address: E8h

EIE.7-5:Reserved bits, will read high
EWDI: Enable Watchdog timer interrupt
EX5: External Interrupt 5 Enable.
EX4: External Interrupt 4 Enable.
EX3: External Interrupt 3 Enable.
EX2: External Interrupt 2 Enable.

B Register

Bit:	7	6	5	4	3	2	1	0
	B.7	B.6	B.5	B.4	B.3	B.2	B.1	B.0

Mnemonic: B Address: F0h

B.7-0:The B register is the standard 8052 register that serves as a second accumulator.

Extended Interrupt Priority

Bit:	7	6	5	4	3	2	1	0
	-	-	-	PWDI	PX5	PX4	PX3	PX2

Mnemonic: EIP Address: F8h

EIP.7-5:Reserved bits.
PWDI: Watchdog timer interrupt priority.
PX5: External Interrupt 5 Priority. 0 = Low priority, 1 = High priority.
PX4: External Interrupt 4 Priority. 0 = Low priority, 1 = High priority.
PX3: External Interrupt 3 Priority. 0 = Low priority, 1 = High priority.
PX2: External Interrupt 2 Priority. 0 = Low priority, 1 = High priority.

INSTRUCTION

The W77C32 executes all the instructions of the standard 8032 family. The operation of these instructions, their effect on the flag bits and the status bits is exactly the same. However, timing of these instructions is different. The reason for this is two fold. Firstly, in the W77C32, each machine cycle consists of 4 clock periods, while in the standard 8032 it consists of 12 clock periods. Also, in the W77C32 there is only one fetch per machine cycle i.e. 4 clocks per fetch, while in the standard 8032 there can be two fetches per machine cycle, which works out to 6 clocks per fetch.

The advantage the W77C32 has is that since there is only one fetch per machine cycle, the number of machine cycles in most cases is equal to the number of operands that the instruction has. In case of jumps and calls there will be an additional cycle that will be needed to calculate the new address. But overall the W77C32 reduces the number of dummy fetches and wasted cycles, thereby improving efficiency as compared to the standard 8032.

Table 2. Instructions that affect Flag settings

Instruction	Carry	Overflow	Auxiliary Carry	Instruction	Carry	Overflow	Auxiliary Carry
ADD	X	X	X	CLR C	0		
ADDC	X	X	X	CPL C	X		
SUBB	X	X	X	ANL C, bit	X		
MUL	0	X		ANL C, bit	X		
DIV	0	X		ORL C, bit	X		
DA A	X			ORL C, bit	X		
RRC A	X			MOV C, bit	X		
RLC A	X			CJNE	X		
SETB C	1						

A "X" indicates that the modification is as per the result of instruction.

Table 3. Instruction Timing for W77C32

Instruction	HEX Op-Code	Bytes	W77C32 Machine Cycles	W77C32 Clock Cycles	8032 Clock Cycles	W77C32 vs. 8032 Speed Ratio
NOP	00	1	1	4	12	3
ADD A, R0	28	1	1	4	12	3
ADD A, R1	29	1	1	4	12	3
ADD A, R2	2A	1	1	4	12	3
ADD A, R3	2B	1	1	4	12	3
ADD A, R4	2C	1	1	4	12	3
ADD A, R5	2D	1	1	4	12	3

Table 3. Instruction Timing for W77C32, continued

Instruction	HEX Op-Code	Bytes	W77C32 Machine Cycles	W77C32 Clock Cycles	8032 Clock Cycles	W77C32 vs. 8032 Speed Ratio
ADD A, R6	2E	1	1	4	12	3
ADD A, R7	2F	1	1	4	12	3
ADD A, @R0	26	1	1	4	12	3
ADD A, @R1	27	1	1	4	12	3
ADD A, direct	25	2	2	8	12	1.5
ADD A, #data	24	2	2	8	12	1.5
ADDC A, R0	38	1	1	4	12	3
ADDC A, R1	39	1	1	4	12	3
ADDC A, R2	3A	1	1	4	12	3
ADDC A, R3	3B	1	1	4	12	3
ADDC A, R4	3C	1	1	4	12	3
ADDC A, R5	3D	1	1	4	12	3
ADDC A, R6	3E	1	1	4	12	3
ADDC A, R7	3F	1	1	4	12	3
ADDC A, @R0	36	1	1	4	12	3
ADDC A, @R1	37	1	1	4	12	3
ADDC A, direct	35	2	2	8	12	1.5
ADDC A, #data	34	2	2	8	12	1.5
ACALL addr11	71, 91, B1, 11, 31, 51, D1, F1	2	3	12	24	2
AJMP ADDR11	01, 21, 41, 61, 81, A1, C1, E1	2	3	12	24	2
ANL A, R0	58	1	1	4	12	3
ANL A, R1	59	1	1	4	12	3
ANL A, R2	5A	1	1	4	12	3
ANL A, R3	5B	1	1	4	12	3
ANL A, R4	5C	1	1	4	12	3
ANL A, R5	5D	1	1	4	12	3
ANL A, R6	5E	1	1	4	12	3
ANL A, R7	5F	1	1	4	12	3
ANL A, @R0	56	1	1	4	12	3
ANL A, @R1	57	1	1	4	12	3
ANL A, direct	55	2	2	8	12	1.5
ANL A, #data	54	2	2	8	12	1.5
ANL direct, A	52	2	2	8	12	1.5
ANL direct, #data	53	3	3	12	24	2
ANL C, bit	82	2	2	8	24	3
ANL C, /bit	B0	2	2	8	24	3
CJNE A, direct, rel	B5	3	4	16	24	1.5

Table 3. Instruction Timing for W77C32, continued

Instruction	HEX Op-Code	Bytes	W77C32 Machine Cycles	W77C32 Clock Cycles	8032 Clock Cycles	W77C32 vs. 8032 Speed Ratio
CJNE A, #data, rel	B4	3	4	16	24	1.5
CJNE @R0, #data, rel	B6	3	4	16	24	1.5
CJNE @R1, #data, rel	B7	3	4	16	24	1.5
CJNE R0, #data, rel	B8	3	4	16	24	1.5
CJNE R1, #data, rel	B9	3	4	16	24	1.5
CJNE R2, #data, rel	BA	3	4	16	24	1.5
CJNE R3, #data, rel	BB	3	4	16	24	1.5
CJNE R4, #data, rel	BC	3	4	16	24	1.5
CJNE R5, #data, rel	BD	3	4	16	24	1.5
CJNE R6, #data, rel	BE	3	4	16	24	1.5
CJNE R7, #data, rel	BF	3	4	16	24	1.5
CLR A	E4	1	1	4	12	3
CPL A	F4	1	1	4	12	3
CLR C	C3	1	1	4	12	3
CLR bit	C2	2	2	8	12	1.5
CPL C	B3	1	1	4	12	3
CPL bit	B2	2	2	8	12	1.5
DEC A	14	1	1	4	12	3
DEC R0	18	1	1	4	12	3
DEC R1	19	1	1	4	12	3
DEC R2	1A	1	1	4	12	3
DEC R3	1B	1	1	4	12	3
DEC R4	1C	1	1	4	12	3
DEC R5	1D	1	1	4	12	3
DEC R6	1E	1	1	4	12	3
DEC R7	1F	1	1	4	12	3
DEC @R0	16	1	1	4	12	3
DEC @R1	17	1	1	4	12	3
DEC direct	15	2	2	8	12	1.5
DEC DPTR	A5	1	2	8	-	-
DIV AB	84	1	5	20	48	2.4
DA A	D4	1	1	4	12	3
DJNZ R0, rel	D8	2	3	12	24	2
DJNZ R1, rel	D9	2	3	12	24	2
DJNZ R5, rel	DD	2	3	12	24	2
DJNZ R2, rel	DA	2	3	12	24	2
DJNZ R3, rel	DB	2	3	12	24	2

Table 3. Instruction Timing for W77C32, continued

Instruction	HEX Op-Code	Bytes	W77C32 Machine Cycles	W77C32 Clock Cycles	8032 Clock Cycles	W77C32 vs. 8032 Speed Ratio
DJNZ R4, rel	DC	2	3	12	24	2
DJNZ R6, rel	DE	2	3	12	24	2
DJNZ R7, rel	DF	2	3	12	24	2
DJNZ direct, rel	D5	3	4	16	24	1.5
INC A	04	1	1	4	12	3
INC R0	08	1	1	4	12	3
INC R1	09	1	1	4	12	3
INC R2	0A	1	1	4	12	3
INC R3	0B	1	1	4	12	3
INC R4	0C	1	1	4	12	3
INC R5	0D	1	1	4	12	3
INC R6	0E	1	1	4	12	3
INC R7	0F	1	1	4	12	3
INC @R0	06	1	1	4	12	3
INC @R1	07	1	1	4	12	3
INC direct	05	2	2	8	12	1.5
INC DPTR	A3	1	2	8	24	3
JMP @A+DPTR	73	1	2	8	24	3
JZ rel	60	2	3	12	24	2
JNZ rel	70	2	3	12	24	2
JC rel	40	2	3	12	24	2
JNC rel	50	2	3	12	24	2
JB bit, rel	20	3	4	16	24	1.5
JNB bit, rel	30	3	4	16	24	1.5
JBC bit, rel	10	3	4	16	24	1.5
LCALL addr16	12	3	4	16	24	1.5
LJMP addr16	02	3	4	16	24	1.5
MUL AB	A4	1	5	20	48	2.4
MOV A, R0	E8	1	1	4	12	3
MOV A, R1	E9	1	1	4	12	3
MOV A, R2	EA	1	1	4	12	3
MOV A, R3	EB	1	1	4	12	3
MOV A, R4	EC	1	1	4	12	3
MOV A, R5	ED	1	1	4	12	3
MOV A, R6	EE	1	1	4	12	3
MOV A, R7	EF	1	1	4	12	3
MOV A, @R0	E6	1	1	4	12	3
MOV A, @R1	E7	1	1	4	12	3

Table 3. Instruction Timing for W77C32, continued

Instruction	HEX Op-Code	Bytes	W77C32 Machine Cycles	W77C32 Clock Cycles	8032 Clock Cycles	W77C32 vs. 8032 Speed Ratio
MOV A, direct	E5	2	2	8	12	1.5
MOV A, #data	74	2	2	8	12	1.5
MOV R0, A	F8	1	1	4	12	3
MOV R1, A	F9	1	1	4	12	3
MOV R2, A	FA	1	1	4	12	3
MOV R3, A	FB	1	1	4	12	3
MOV R4, A	FC	1	1	4	12	3
MOV R5, A	FD	1	1	4	12	3
MOV R6, A	FE	1	1	4	12	3
MOV R7, A	FF	1	1	4	12	3
MOV R0, direct	A8	2	2	8	12	1.5
MOV R1, direct	A9	2	2	8	12	1.5
MOV R2, direct	AA	2	2	8	12	1.5
MOV R3, direct	AB	2	2	8	12	1.5
MOV R4, direct	AC	2	2	8	12	1.5
MOV R5, direct	AD	2	2	8	12	1.5
MOV R6, direct	AE	2	2	8	12	1.5
MOV R7, direct	AF	2	2	8	12	1.5
MOV R0, #data	78	2	2	8	12	1.5
MOV R1, #data	79	2	2	8	12	1.5
MOV R2, #data	7A	2	2	8	12	1.5
MOV R3, #data	7B	2	2	8	12	1.5
MOV R4, #data	7C	2	2	8	12	1.5
MOV R5, #data	7D	2	2	8	12	1.5
MOV R6, #data	7E	2	2	8	12	1.5
MOV R7, #data	7F	2	2	8	12	1.5
MOV @R0, A	F6	1	1	4	12	3
MOV @R1, A	F7	1	1	4	12	3
MOV @R0, direct	A6	2	2	8	12	1.5
MOV @R1, direct	A7	2	2	8	12	1.5
MOV @R0, #data	76	2	2	8	12	1.5
MOV @R1, #data	77	2	2	8	12	1.5
MOV direct, A	F5	2	2	8	12	1.5
MOV direct, R0	88	2	2	8	12	1.5
MOV direct, R1	89	2	2	8	12	1.5
MOV direct, R2	8A	2	2	8	12	1.5
MOV direct, R3	8B	2	2	8	12	1.5

Table 3. Instruction Timing for W77C32, continued

Instruction	HEX Op-Code	Bytes	W77C32 Machine Cycles	W77C32 Clock Cycles	8032 Clock Cycles	W77C32 vs. 8032 Speed Ratio
MOV direct, R4	8C	2	2	8	12	1.5
MOV direct, R5	8D	2	2	8	12	1.5
MOV direct, R6	8E	2	2	8	12	1.5
MOV direct, R7	8F	2	2	8	12	1.5
MOV direct, @R0	86	2	2	8	12	1.5
MOV direct, @R1	87	2	2	8	12	1.5
MOV direct, direct	85	3	3	12	24	2
MOV direct, #data	75	3	3	12	24	2
MOV DPTR, #data 16	90	3	3	12	24	2
MOVC A, @A+DPTR	93	1	2	8	24	3
MOVC A, @A+PC	83	1	2	8	24	3
MOVX A, @R0	E2	1	2 - 9	8 - 36	24	3 - 0.66
MOVX A, @R1	E3	1	2 - 9	8 - 36	24	3 - 0.66
MOVX A, @DPTR	E0	1	2 - 9	8 - 36	24	3 - 0.66
MOVX @R0, A	F2	1	2 - 9	8 - 36	24	3 - 0.66
MOVX @R1, A	F3	1	2 - 9	8 - 36	24	3 - 0.66
MOVX @DPTR, A	F0	1	2 - 9	8 - 36	24	3 - 0.66
MOV C, bit	A2	2	2	8	12	1.5
MOV bit, C	92	2	2	8	24	3
ORL A, R0	48	1	1	4	12	3
ORL A, R1	49	1	1	4	12	3
ORL A, R2	4A	1	1	4	12	3
ORL A, R3	4B	1	1	4	12	3
ORL A, R4	4C	1	1	4	12	3
ORL A, R5	4D	1	1	4	12	3
ORL A, R6	4E	1	1	4	12	3
ORL A, R7	4F	1	1	4	12	3
ORL A, @R0	46	1	1	4	12	3
ORL A, @R1	47	1	1	4	12	3
ORL A, direct	45	2	2	8	12	1.5
ORL A, #data	44	2	2	8	12	1.5
ORL direct, A	42	2	2	8	12	1.5
ORL direct, #data	43	3	3	12	24	2
ORL C, bit	72	2	2	8	24	3
ORL C, /bit	A0	2	2	6	24	3
PUSH direct	C0	2	2	8	24	3
POP direct	D0	2	2	8	24	3
RET	22	1	2	8	24	3

Table 3. Instruction Timing for W77C32, continued

Instruction	HEX Op-Code	Bytes	W77C32 Machine Cycles	W77C32 Clock Cycles	8032 Clock Cycles	W77C32 vs. 8032 Speed Ratio
RETI	32	1	2	8	24	3
RL A	23	1	1	4	12	3
RLC A	33	1	1	4	12	3
RR A	03	1	1	4	12	3
RRC A	13	1	1	4	12	3
SETB C	D3	1	1	4	12	3
SETB bit	D2	2	2	8	12	1.5
SWAP A	C4	1	1	4	12	3
SJMP rel	80	2	3	12	24	2
SUBB A, R0	98	1	1	4	12	3
SUBB A, R1	99	1	1	4	12	3
SUBB A, R2	9A	1	1	4	12	3
SUBB A, R3	9B	1	1	4	12	3
SUBB A, R4	9C	1	1	4	12	3
SUBB A, R5	9D	1	1	4	12	3
SUBB A, R6	9E	1	1	4	12	3
SUBB A, R7	9F	1	1	4	12	3
SUBB A, @R0	96	1	1	4	12	3
SUBB A, @R1	97	1	1	4	12	3
SUBB A, direct	95	2	2	8	12	1.5
SUBB A, #data	94	2	2	8	12	1.5
XCH A, R0	C8	1	1	4	12	3
XCH A, R1	C9	1	1	4	12	3
XCH A, R2	CA	1	1	4	12	3
XCH A, R3	CB	1	1	4	12	3
XCH A, R4	CC	1	1	4	12	3
XCH A, R5	CD	1	1	4	12	3
XCH A, R6	CE	1	1	4	12	3
XCH A, R7	CF	1	1	4	12	3
XCH A, @R0	C6	1	1	4	12	3
XCH A, @R1	C7	1	1	4	12	3
XCHD A, @R0	D6	1	1	4	12	3
XCHD A, @R1	D7	1	1	4	12	3
XCH A, direct	C5	2	2	8	12	1.5
XRL A, R0	68	1	1	4	12	3
XRL A, R1	69	1	1	4	12	3
XRL A, R2	6A	1	1	4	12	3

Table 3. Instruction Timing for W77C32, continued

Instruction	HEX Op-Code	Bytes	W77C32 Machine Cycles	W77C32 Clock Cycles	8032 Clock Cycles	W77C32 vs. 8032 Speed Ratio
XRL A, R3	6B	1	1	4	12	3
XRL A, R4	6C	1	1	4	12	3
XRL A, R5	6D	1	1	4	12	3
XRL A, R6	6E	1	1	4	12	3
XRL A, R7	6F	1	1	4	12	3
XRL A, @R0	66	1	1	4	12	3
XRL A, @R1	67	1	1	4	12	3
XRL A, direct	65	2	2	8	12	1.5
XRL A, #data	64	2	2	8	12	1.5
XRL direct, A	62	2	2	8	12	1.5
XRL direct, #data	63	3	3	12	24	2

INSTRUCTION TIMING

The instruction timing for the W77C32 is an important aspect, especially for those users who wish to use software instructions to generate timing delays. Also, it provides the user with an insight into the timing differences between the W77C32 and the standard 8032. In the W77C32 each machine cycle is four clock periods long. Each clock period is designated a state. Thus each machine cycle is made up of four states, C1, C2, C3 and C4 in that order. Due to the reduced time for each instruction execution, both the clock edges are used for internal timing. Hence it is important that the duty cycle of the clock be as close to 50% as possible to avoid timing conflicts. As mentioned earlier, the W77C32 does one op-code fetch per machine cycle. Therefore, in most of the instructions, the number of machine cycles needed to execute the instruction is equal to the number of bytes in the instruction. Of the 256 available op-codes, 128 of them are single cycle instructions. Thus more than half of all op-codes in the W77C32 are executed in just four clock periods. Most of the two-cycle instructions are those that have two byte instruction codes. However there are some instructions that have only one byte instructions, yet they are two cycle instructions. One instruction which is of importance is the MOVX instruction. In the standard 8032, the MOVX instruction is always two machine cycles long. However in the W77C32, the user has a facility to stretch the duration of this instruction from 2 machine cycles to 9 machine cycles. The $\overline{RD}$ and $\overline{WR}$ strobe lines are also proportionately elongated. This gives the user flexibility in accessing both fast and slow peripherals without the use of external circuitry and with minimum software overhead. The rest of the instructions are either three, four or five machine cycle instructions. Note that in the W77C32, based on the number of machine cycles, there are five different types, while in the standard 8032 there are only three. However, in the W77C32 each machine cycle is made of only 4 clock periods compared to the 12 clock periods for the standard 8032. Therefore, even though the number of categories has increased, each instruction is at least 1.5 to 3 times faster than the standard 8032 in terms of clock periods.

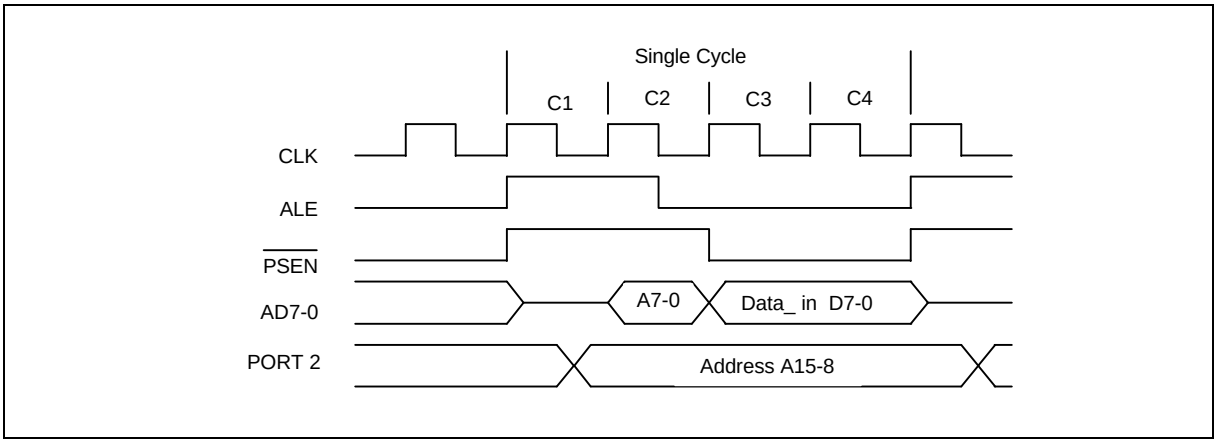

Figure 3: Single Cycle Instruction Timing

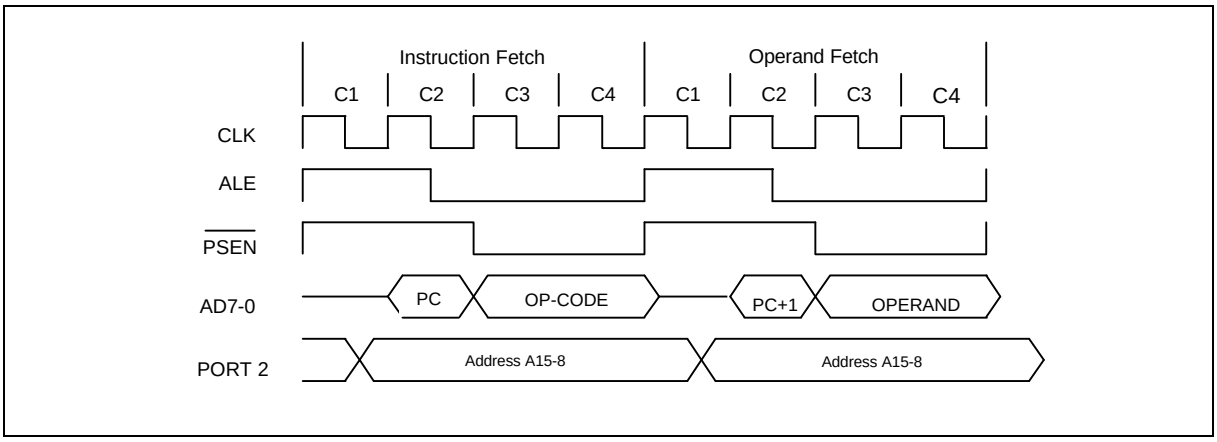

Figure 4: Two Cycle Instruction Timing

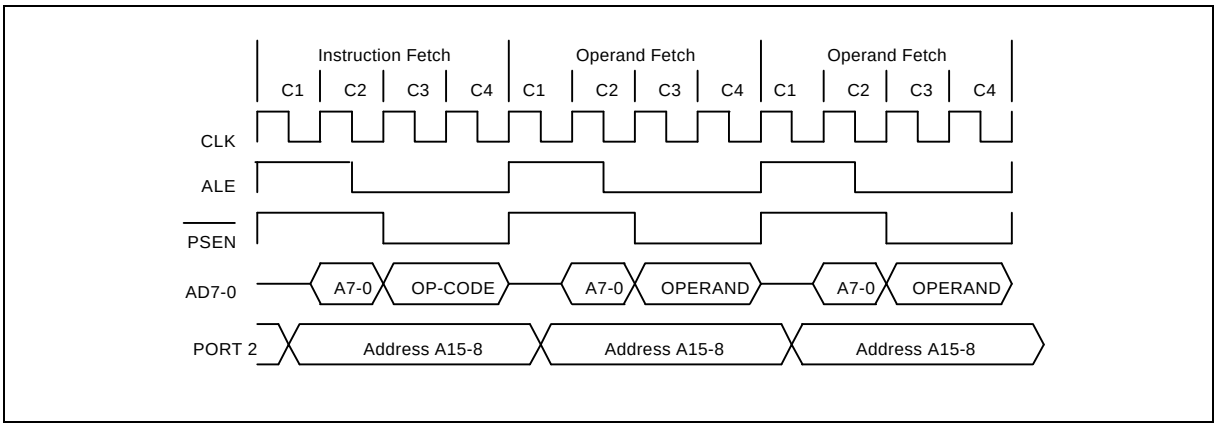

Figure 5: Three Cycle Instruction Timing

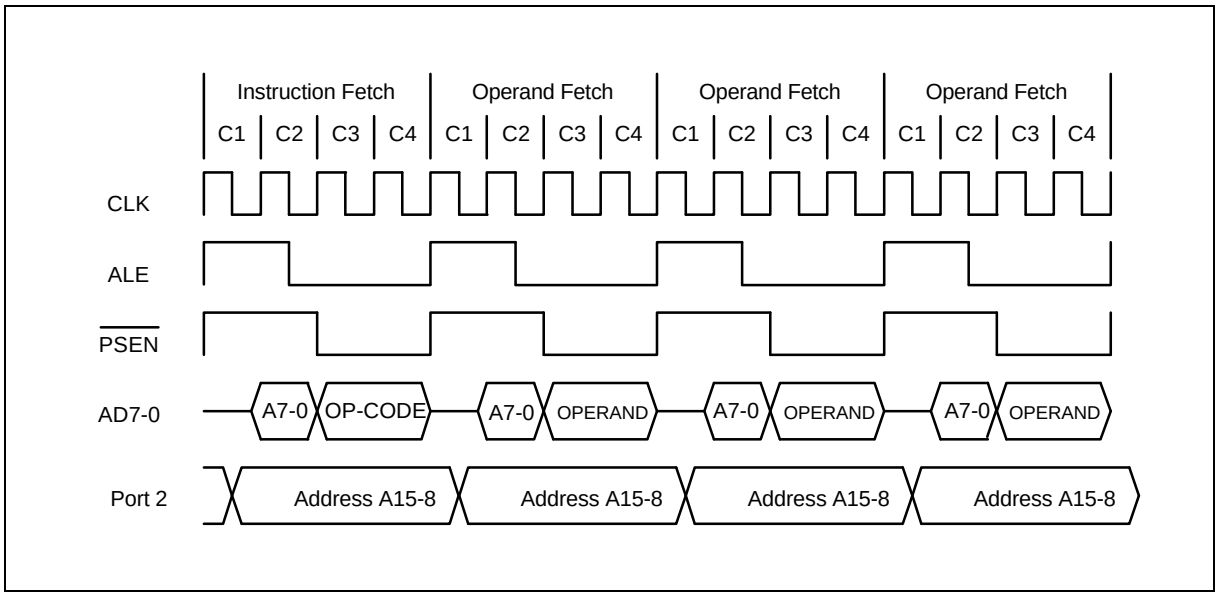

Figure 6: Four Cycle Instruction Timing

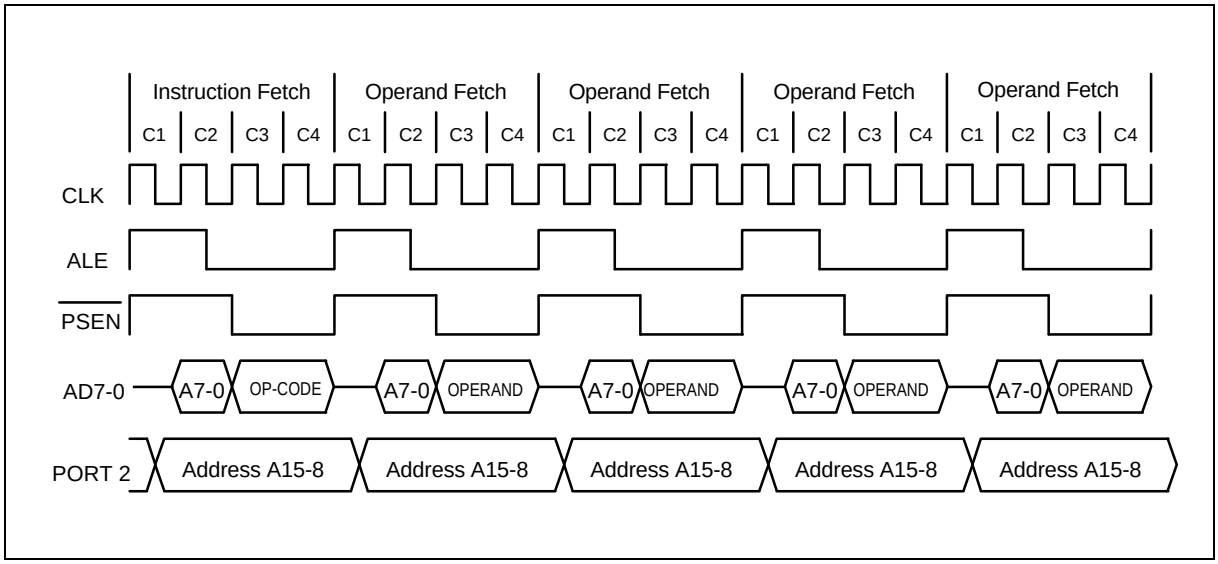

Figure 7: Five Cycle Instruction Timing

MOVX Instruction

The W77C32, like the standard 8032, uses the MOVX instruction to access external Data Memory. This Data Memory includes both off-chip memory as well as memory mapped peripherals. While the results of the MOVX instruction are the same as in the standard 8032, the operation and the timing of the strobe signals have been modified in order to give the user much greater flexibility.

The MOVX instruction is of two types, the MOVX @Ri and MOVX @DPTR. In the MOVX @Ri, the address of the external data comes from two sources. The lower 8-bits of the address are stored in the Ri register of the selected working register bank. The upper 8-bits of the address come from the port 2 SFR. In the MOVX @DPTR type, the full 16-bit address is supplied by the Data Pointer.

Since the W77C32 has two Data Pointers, DPTR and DPTR1, the user has to select between the two by setting or clearing the DPS bit. The Data Pointer Select bit (DPS) is the LSB of the DPS SFR, which exists at location 86h. No other bits in this SFR have any effect, and they are set to 0. When DPS is 0, then DPTR is selected, and when set to 1, DPTR1 is selected. The user can switch between DPTR and DPTR1 by toggling the DPS bit. The quickest way to do this is by the INC instruction. The advantage of having two Data Pointers is most obvious while performing block move operations. The accompanying code shows how the use of two separate Data Pointers speeds up the execution time for code performing the same task.

Block Move with single Data Pointer:

```
; SH and SL are the high and low bytes of Source Address
; DH and DL are the high and low bytes of Destination Address
; CNT is the number of bytes to be moved
```

			Machine cycles of W77C32 #
MOV	R2, #CNT	; Load R2 with the count value	2
MOV	R3, #SL	; Save low byte of Source Address in R3	2
MOV	R4, #SH	; Save high byte of Source address in R4	2
MOV	R5, #DL	; Save low byte of Destination Address in R5	2
MOV	R6, #DH	; Save high byte of Destination address in R6	2
LOOP:			
MOV	DPL, R3	; Load DPL with low byte of Source address	2
MOV	DPH, R4	; Load DPH with high byte of Source address	2
MOVX	A, @DPTR	; Get byte from Source to Accumulator	2
INC	DPTR	; Increment Source Address to next byte	2
MOV	R3, DPL	; Save low byte of Source address in R3	2
MOV	R4, DPH	; Save high byte of Source Address in R4	2
MOV	DPL, R5	; Load low byte of Destination Address in DPL	2
MOV	DPH, R6	; Load high byte of Destination Address in DPH	2
MOVX	@DPTR, A	; Write data to destination	2
INC	DPTR	; Increment Destination Address	2
MOV	DPL, R5	; Save low byte of new destination address in R5	2
MOV	DPH, R6	; Save high byte of new destination address in R6	2
DJNZ	R2, LOOP	; Decrement count and do LOOP again if count <> 0	2

Machine cycles in standard 8032 = 10 + (26 * CNT)
Machine cycles in W77C32 = 10 + (26 * CNT)
If CNT = 50
Clock cycles in standard 8032= ((10 + (26 *50)) * 12 = (10 + 1300) * 12 = 15720
Clock cycles in W77C32 = ((10 + (26 * 50)) * 4 = (10 + 1300) * 4 = 5240

Block Move with Two Data Pointers in W77C32:

```
; SH and SL are the high and low bytes of Source Address
; DH and DL are the high and low bytes of Destination Address
; CNT is the number of bytes to be moved
```

			Machine cycles of W77C32 #
MOV	R2, #CNT	; Load R2 with the count value	2
MOV	DPS, #00h	; Clear DPS to point to DPTR	2
MOV	DPTR, #DHDL	; Load DPTR with Destination address	3
INC	DPS	; Set DPS to point to DPTR1	2
MOV	DPTR, #SHSL	; Load DPTR1 with Source address	3
LOOP:			
MOVX	A, @DPTR	; Get data from Source block	2
INC	DPTR	; Increment source address	2
DEC	DPS	; Clear DPS to point to DPTR	2
MOVX	@DPTR, A	; Write data to Destination	2
INC	DPTR	; Increment destination address	2
INC	DPS	; Set DPS to point to DPTR1	2
DJNZ	R2, LOOP	; Check if all done	3

Machine cycles in W77C32 = 12 + (15 * CNT)
If CNT = 50
Clock cycles in W77C32 = (12 + (15 * 50)) * 4 = (12 + 750) * 4 = 3048

We can see that in the first program the standard 8032 takes 15720 cycles, while the W77C32 takes only 5240 cycles for the same code. In the second program, written for the W77C32, program execution requires only 3048 clock cycles. If the size of the block is increased then the saving is even greater.

External Data Memory Access Timing

The timing for the MOVX instruction is another feature of the W77C32. In the standard 8032, the MOVX instruction has a fixed execution time of 2 machine cycles. However in the W77C32, the duration of the access can be varied by the user.

The instruction starts off as a normal op-code fetch of 4 clocks. In the next machine cycle, the W77C32 puts out the address of the external Data Memory and the actual access occurs here. The user can change the duration of this access time by setting the STRETCH value. The Clock Control SFR (CKCON) has three bits that control the stretch value. These three bits are M2-0 (bits 2-0 of CKCON). These three bits give the user 8 different access time options. The stretch can be varied from 0 to 7, resulting in MOVX instructions that last from 2 to 9 machine cycles in length. Note that

the stretching of the instruction only results in the elongation of the MOVX instruction, as if the state of the CPU was held for the desired period. There is no effect on any other instruction or its timing. By default, the Stretch value is set at 1, giving a MOVX instruction of 3 machine cycles. If desired by the user the stretch value can be set to 0 to give the fastest MOVX instruction of only 2 machine cycles.

Table 4. Data Memory Cycle Stretch Values

M2	M1	M0	Machine Cycles	/RD or /WR strobe width in Clocks	/RD or /WR strobe width @25 MHz	/RD or /WR strobe width @40 MHz
0	0	0	2	2	80 nS	50 nS
0	0	1	3(default)	4	160 nS	100 nS
0	1	0	4	8	320 nS	200 nS
0	1	1	5	12	480 nS	300 nS
1	0	0	6	16	640 nS	400 nS
1	0	1	7	20	800 nS	500 nS
1	1	0	8	24	960 nS	600 nS
1	1	1	9	28	1120 nS	700 nS

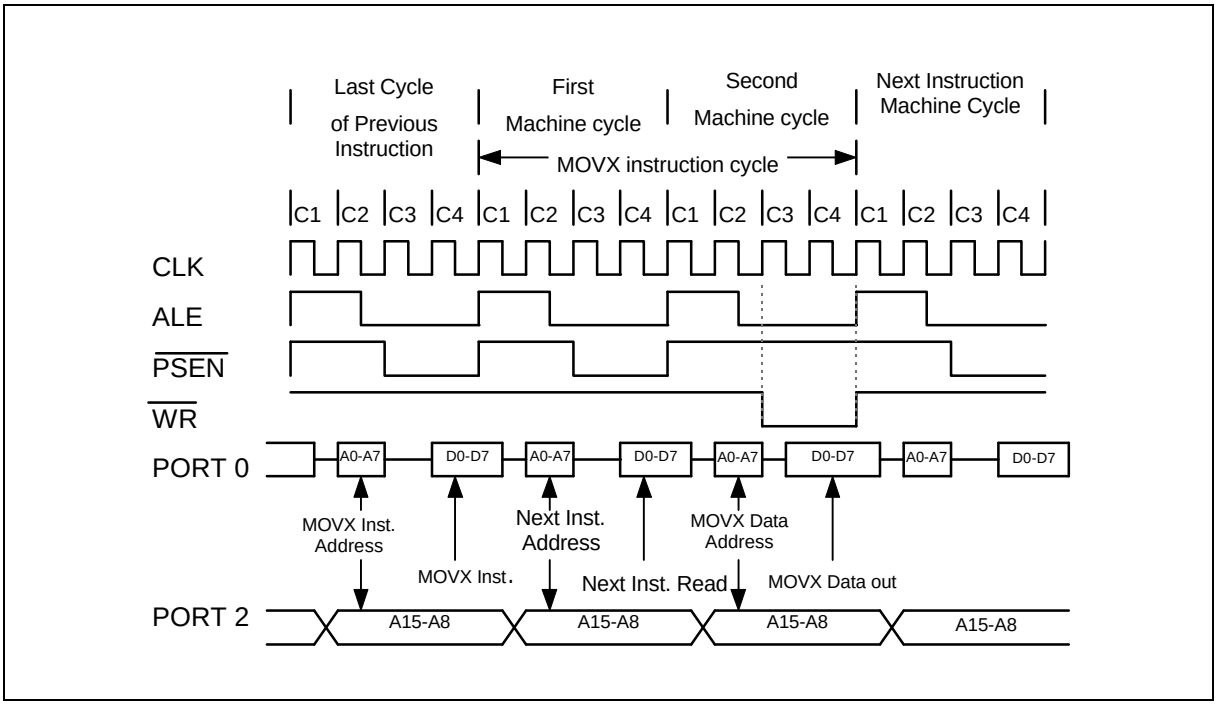

Figure 8: Data Memory Write with Stretch Value = 0

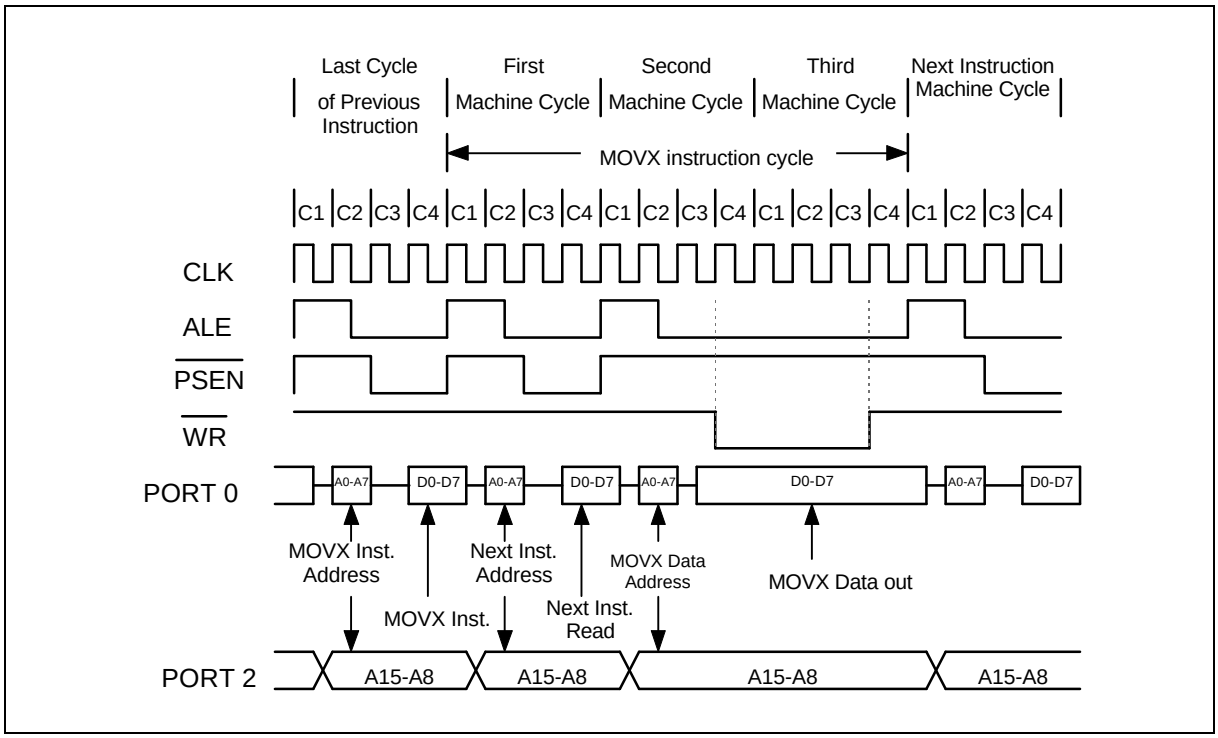

Figure 9: Dada Memory Write with Stretch Value = 1

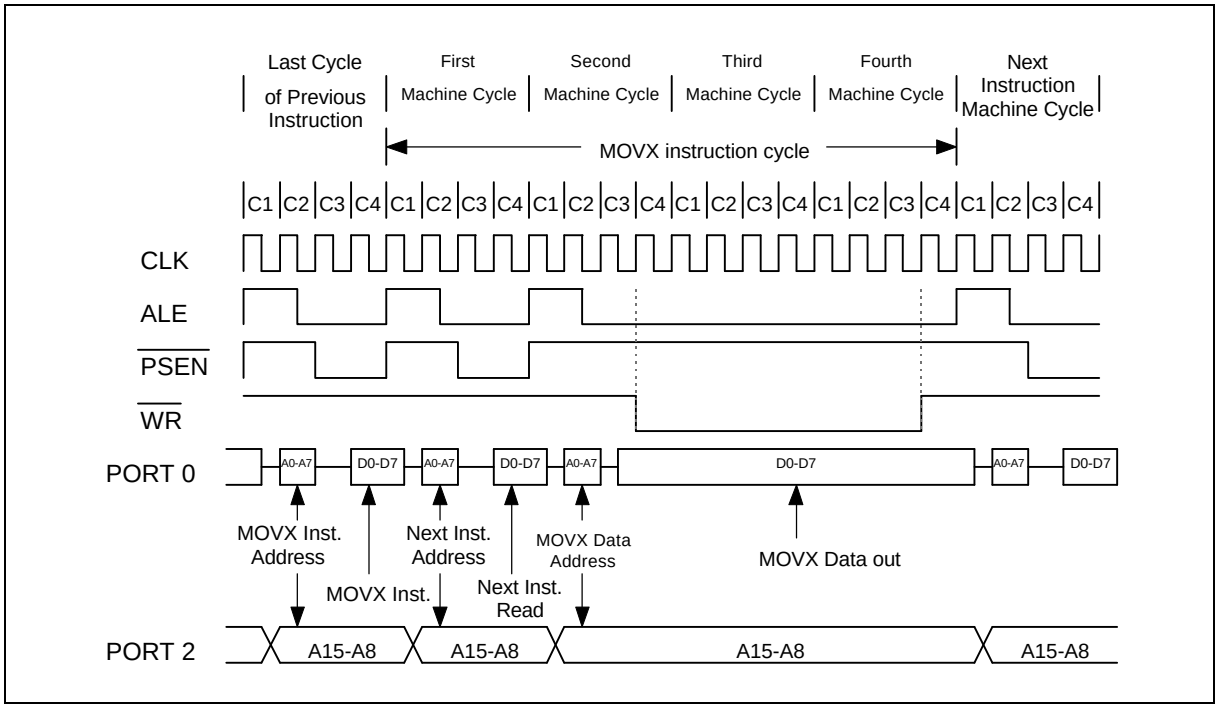

Figure 10: Dada Memory Write with Stretch Value = 2

Wait State Control Signal

Either with the software using stretch value to change the required machine cycle of MOVX instruction, the W77C32 provides another hardware signal $\overline{WAIT}$ to implement the wider duration of external data access timing. This wait state control signal is the alternate function of P4.0 such that it can only be invoked to 44-pin PLCC/QFP package type. The wait state control signal can be enabled by setting WS (ROMMAP.7) bit. When enabled, the setting of stretch value decides the minimum length of MOVX instruction cycle and the device will sample the $\overline{WAIT}$ pin at each C3 state before the rising edge of read/write strobe signal during MOVX instruction. Once this signal being recongnized, one more machine cycle (wait state cycle) will be inserted into next cycle. The inserted wait state cycles are unlimited, so the MOVX instruction cycle will end in which the wait state control signal is deactivated. Using wait state control signal allows a dynamically access timimg to a selected external peripheral. The WS bit is accessed by the Timed Access Protection procedure.

Wait State Control Signal Timing (when Stretch = 1)

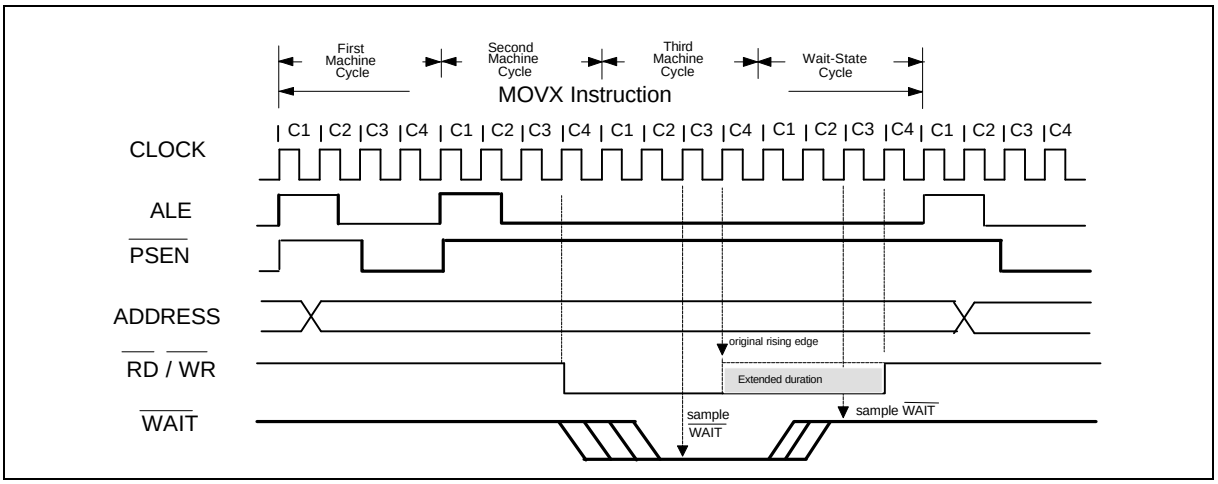

Wait State Control Signal Timing (when Stretch = 2)

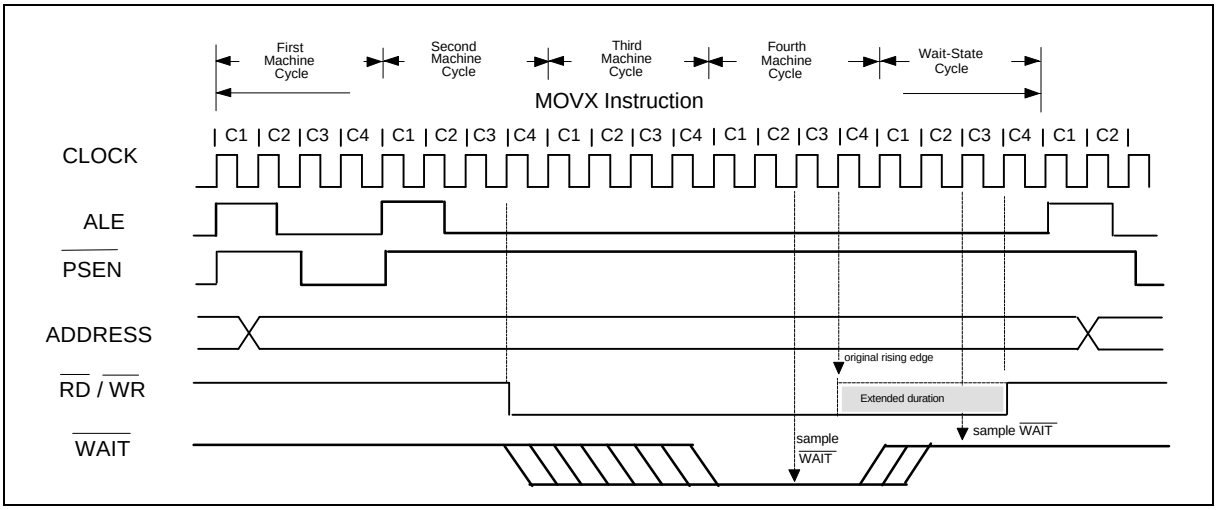

POWER MANAGEMENT

The W77C32 has several features that help the user to modify the power consumption of the device. The power saving features are basically the POWER DOWN mode, ECONOMY mode and the IDLE mode of operation.

Idle Mode

The user can put the device into idle mode by writing 1 to the bit PCON.0. The instruction that sets the idle bit is the last instruction that will be executed before the device goes into Idle Mode. In the Idle mode, the clock to the CPU is halted, but not to the Interrupt, Timer, Watchdog timer and Serial port blocks. This forces the CPU state to be frozen; the Program counter, the Stack Pointer, the Program Status Word, the Accumulator and the other registers hold their contents. The ALE and $\overline{\text{PSEN}}$ pins are held high during the Idle state. The port pins hold the logical states they had at the time Idle was activated. The Idle mode can be terminated in two ways. Since the interrupt controller is still active, the activation of any enabled interrupt can wake up the processor. This will automatically clear the Idle bit, terminate the Idle mode, and the Interrupt Service Routine (ISR) will be executed. After the ISR, execution of the program will continue from the instruction which put the device into Idle mode.

The Idle mode can also be exited by activating the reset. The device can be put into reset either by applying a high on the external RST pin, a Power on/fail reset condition or a Watchdog timer reset. The external reset pin has to be held high for at least two machine cycles I.e. 8 clock periods to be recognized as a valid reset. In the reset condition the program counter is reset to 0000h and all the SFRs are set to the reset condition. Since the clock is already running there is no delay and execution starts immediately. In the Idle mode, the Watchdog timer continues to run, and if enabled, a time-out will cause a watchdog timer interrupt which will wake up the device. The software must reset the Watchdog timer in order to preempt the reset which will occur after 512 clock periods of the time-out. When the W77C32 is exiting from an Idle mode with a reset, the instruction following the one which put the device into Idle mode is not executed. So there is no danger of unexpected writes.

Economy Mode

The power consumption of microcontroller relates to operating frequency. The W77C32 offers a Economy mode to reduce the internal clock rate dynamically without external components. By default, one machine cycle needs 4 clocks. In Economy mode, software can select 4, 64 or 1024 clocks per machine cycle. It keeps the CPU operating at a acceptable speed but eliminates the power consumption. In the Idle mode, the clock of the core logic is stopped, b+ut all clocked peripherals such as watchdog timer are still running at a rate of clock/4. In the Economy mode, all clocked peripherals run at the same reduced clocks rate as in core logic. So the Economy mode may provide a lower power consumption than idle mode.

Software invokes the Economy mode by setting the appropriate bits in the SFRs. Setting the bits CD0(PMR.6),CD1(PMR.7) decides the instruction cycle rate as below:

CD1	CD0	clocks/machine cycle
0	0	Reserved
0	1	4 (default)
1	0	64
1	1	1024

The selection of instruction rate is going to take effect after a delay of one instruction cycle. Switching to divide by 64 or 1024 mode must first go from divide by 4 mode. This means software can not switch directly between clock/64 and clock/1024 mode. The CPU has to return clock/4 mode first, then go to clock/64 or clock/1024 mode.

The W77C32 allows the user to use internal RC oscillator instead of external crystal. Setting the XT/$\overline{RG}$ bit (EXIF.3) selects the crystal or RC oscillator as the clock source. When invoking RC oscillator in Economy mode, software may set the XTOFF bit to turn off the crystal amplifier for saving power. The CPU would run at the clock rate of approximately 2–4 MHz divided by 4, 64 or 1024. The RC oscillator is not precise so that can not be invoked to the operation which needs the accurate time-base such as serial communication. The RGMD(EXIF.2) indicates current clock source. When switching the clock source, CPU needs one instruction cycle delay to take effect new setting. If crystal amplifier is disabled and RC oscillator is present clock source, software must first clear the XTOFF bit to turn on crystal amplifier before switch to crystal operation. Hardware will set the XTUP bit (STATUS.4) once the crystal is warm-up and ready for use. It is unable to set XT/$\overline{RG}$ bit to 1 if XTUP = 0.

In Economy mode, the serial port can not receive/transmit data correctly because the baud rate is changed. In some systems, the external interrupts may require the fastest process such that the reducing of operating speed is restricted. In order to solve these dilemmas, the W77C32 offers a switchback feature which allows the CPU back to clock/4 mode immediately when triggered by serial operation or external interrupts. The switchback feature is enabled by setting the SWB bit (PMR.5). A serial port reception/transmission or qualified external interrupt which is enabled and acknowledged without block conditions will cause CPU to return to divide by 4 mode. For the serial port reception, a switchback is generated by a falling edge associated with start bit if the serial port reception is enabled. When a serial port transmission, an instruction which writes a byte of data to serial port buffer will cause a switchback to ensure the correct transmission. The switchback feature is unaffected by serial port interrupt flags. After a switchback is generated, the software can manually return the CPU to Economy mode. Note that the modification of clock control bits CD0 and CD1 will be ignored during serial port transmit/receive when switchback is enabled. The Watchdog timer reset, power-on/fail reset or external reset will force the CPU to return to divide by 4 mode.

Power Down Mode

The device can be put into Power Down mode by writing 1 to bit PCON.1. The instruction that does this will be the last instruction to be executed before the device goes into Power Down mode. In the Power Down mode, all the clocks are stopped and the device comes to a halt. All activity is completely stopped and the power consumption is reduced to the lowest possible value. In this state the ALE and $\overline{PSEN}$ pins are pulled low. The port pins output the values held by their respective SFRs.

The W77C32 will exit the Power Down mode with a reset or by an external interrupt pin enabled as level detect. An external reset can be used to exit the Power down state. The high on RST pin terminates the Power Down mode, and restarts the clock. The program execution will restart from 0000h. In the Power down mode, the clock is stopped, so the Watchdog timer cannot be used to provide the reset to exit Power down mode.

The W77C32 can be woken from the Power Down mode by forcing an external interrupt pin activated, provided the corresponding interrupt is enabled, while the global enable(EA) bit is set and the external input has been set to a level detect mode. If these conditions are met, then the low level on the external pin re-starts the oscillator. Then device executes the interrupt service routine for the corresponding external interrupt. After the interrupt service routine is completed, the program

execution returns to the instruction after the one which put the device into Power Down mode and continues from there. When RGSL(EXIF.1) bit is set to 1, the CPU will use the internal RC oscillator instead of crystal to exit Power Down mode. The microcontroller will automatically switch from RC oscillator to crystal after clock is stable. The RC oscillator runs at approximately 2–4 MHz. Using RC oscillator to exit from Power Down mode saves the time for waiting crystal start-up. It is useful in the low power system which usually be awakened from a short operation then returns to Power Down mode.

Table 5. Status of external pins during Idle and Power Down

MODE	PROGRAM MEMORY	ALE	$\overline{\text{PSEN}}$	PORT0	PORT1	PORT2	PORT3
Idle	Internal	1	1	Data	Data	Data	Data
Idle	External	1	1	Float	Data	Address	Data
Power Down	Internal	0	0	Data	Data	Data	Data
Power Down	External	0	0	Float	Data	Data	Data

RESET CONDITIONS

The user has several hardware related options for placing the W77C32 into reset condition. In general, most register bits go to their reset value irrespective of the reset condition, but there are a few flags whose state depends on the source of reset. The user can use these flags to determine the cause of reset using software. There are three ways of putting the device into reset state. They are External reset, Power on/fail reset and Watchdog reset.

External Reset

The device continuously samples the RST pin at state C4 of every machine cycle. Therefore the RST pin must be held for at least 2 machine cycles to ensure detection of a valid RST high. The reset circuitry then synchronously applies the internal reset signal. Thus the reset is a synchronous operation and requires the clock to be running to cause an external reset.

Once the device is in reset condition, it will remain so as long as RST is 1. Even after RST is deactivated, the device will continue to be in reset state for up to two machine cycles, and then begin program execution from 0000h. There is no flag associated with the external reset condition. However since the other two reset sources have flags, the external reset can be considered as the default reset if those two flags are cleared.

Watchdog Timer Reset

The Watchdog timer is a free running timer with programmable time-out intervals. The user can clear the watchdog timer at any time, causing it to restart the count. When the time-out interval is reached an interrupt flag is set. If the Watchdog reset is enabled and the watchdog timer is not cleared, then 512 clocks from the flag being set, the watchdog timer will generate a reset . This places the device into the reset condition. The reset condition is maintained by hardware for two machine cycles. Once the reset is removed the device will begin execution from 0000h.

RESET STATE

Most of the SFRs and registers on the device will go to the same condition in the reset state. The Program Counter is forced to 0000h and is held there as long as the reset condition is applied.

However, the reset state does not affect the on-chip RAM. The data in the RAM will be preserved during the reset. However, the stack pointer is reset to 07h, and therefore the stack contents will be lost. The RAM contents will be lost if the V_{DD} falls below approximately 2V, as this is the minimum voltage level required for the RAM to operate normally. Therefore after a first time power on reset the RAM contents will be indeterminate. During a power fail condition, if the power falls below 2V, the RAM contents are lost. Hence it should be assumed that after a power on/fail reset, POR = 1, the RAM contents are lost.

After a reset most SFRs are cleared. Interrupts and Timers are disabled. The Watchdog timer is disabled if the reset source was a POR. The port SFRs have FFh written into them which puts the port pins in a high state. Port 0 floats as it does not have on-chip pull-ups.

Table 6. SFR Reset Value

SFR NAME	RESET VALUE	SFR NAME	RESET VALUE
P0	11111111b	IE	00000000b
SP	00000111b	SADDR	00000000b
DPL	00000000b	P3	11111111b
DPH	00000000b	IP	x0000000b
DPL1	00000000b	SADEN	00000000b
DPH1	00000000b	T2CON	00000000b
DPS	00000000b	T2MOD	00000x00b
PCON	00xx0000b	RCAP2L	00000000b
TCON	00000000b	RCAP2H	00000000b
TMOD	00000000b	TL2	00000000b
TL0	00000000b	TH2	00000000b
TL1	00000000b	TA	11111111b
TH0	00000000b	PSW	00000000b
TH1	00000000b	WDCON	0x0x0xx0b
CKCON	00000001b	ACC	00000000b
P1	11111111b	EIE	xxx00000b
SCON	00000000b	B	00000000b
SBUF	xxxxxxxxb	EIP	xxx00000b
P2	11111111b	PC	00000000b
SADDR1	00000000b	SADEN1	00000000b
SCON1	00000000b	SBUF1	xxxxxxxxb
ROMMAP	01xxxxxxb	PMR	010xx0x0b
EXIF	0000xxx0b	STATUS	000x0000b
P4	xxxx1111b		

The WDCON SFR bits are set/cleared in reset condition depending on the source of the reset.

	External reset	Watchdog reset	Power on reset
WDCON	0x0x0xx0b	0x0x01x0b	01000000b

The POR bit WDCON.6 is set only by the power on reset. The WTRF bit WDCON.2 is set when the Watchdog timer causes a reset. A power on reset will also clear this bit. The EWT bit WDCON.1 is cleared by power on resets. This disables the Watchdog timer resets. A watchdog or external reset does not affect the EWT bit.

INTERRUPTS

The W77C32 has a two priority level interrupt structure with 12 interrupt sources. Each of the interrupt sources has an individual priority bit, flag, interrupt vector and enable bit. In addition, the interrupts can be globally enabled or disabled.

Interrupt Sources

The External Interrupts $\overline{INT0}$ and $\overline{INT1}$ can be either edge triggered or level triggered, depending on bits IT0 and IT1. The bits IE0 and IE1 in the TCON register are the flags which are checked to generate the interrupt. In the edge triggered mode, the INTx inputs are sampled in every machine cycle. If the sample is high in one cycle and low in the next, then a high to low transition is detected and the interrupts request flag IEx in TCON or EXIF is set. The flag bit requests the interrupt. Since the external interrupts are sampled every machine cycle, they have to be held high or low for at least one complete machine cycle. The IEx flag is automatically cleared when the service routine is called. If the level triggered mode is selected, then the requesting source has to hold the pin low till the interrupt is serviced. The IEx flag will not be cleared by the hardware on entering the service routine. If the interrupt continues to be held low even after the service routine is completed, then the processor may acknowledge another interrupt request from the same source. Note that the external interrupts INT2 to $\overline{INT5}$ are edge triggered only. By default, the individual interrupt flag corresponding to external interrupt 2 to 5 must be cleared manually by software. It can be configured with hardware cleared by setting the corresponding bit HCx in the T2MOD register. For instance, if HC2 is set hardware will clear IE2 flag after program enters the interrupt 2 service routine.

The Timer 0 and 1 Interrupts are generated by the TF0 and TF1 flags. These flags are set by the overflow in the Timer 0 and Timer 1. The TF0 and TF1 flags are automatically cleared by the hardware when the timer interrupt is serviced. The Timer 2 interrupt is generated by a logical OR of the TF2 and the EXF2 flags. These flags are set by overflow or capture/reload events in the timer 2 operation. The hardware does not clear these flags when a timer 2 interrupt is executed. Software has to resolve the cause of the interrupt between TF2 and EXF2 and clear the appropriate flag.

The Watchdog timer can be used as a system monitor or a simple timer. In either case, when the time-out count is reached, the Watchdog timer interrupt flag WDIF (WDCON.3) is set. If the interrupt is enabled by the enable bit EIE.4, then an interrupt will occur.

The Serial block can generate interrupts on reception or transmission. There are two interrupt sources from the Serial block, which are obtained by the RI and TI bits in the SCON SFR and RI_1 and TI_1 in the SCON1 SFR. These bits are not automatically cleared by the hardware, and the user will have to clear these bits using software.

All the bits that generate interrupts can be set or reset by hardware, and thereby software initiated interrupts can be generated. Each of the individual interrupts can be enabled or disabled by setting or

clearing a bit in the IE SFR. IE also has a global enable/disable bit EA, which can be cleared to disable all the interrupts, except PFI, at once.

Priority Level Structure

There are two priority levels for the interrupts, high and low. The interrupt source can be individually set to either high or low levels. Naturally, a higher priority interrupt cannot be interrupted by a lower priority interrupt. However there exists a pre-defined hierarchy amongst the interrupts themselves. This hierarchy comes into play when the interrupt controller has to resolve simultaneous requests having the same priority level. This hierarchy is defined as shown below; the interrupts are numbered starting from the highest priority to the lowest.

Table 7. Priority structure of interrupts

SOURCE	FLAG	PRIORITY LEVEL
External Interrupt 0	IE0	1 (highest)
Timer 0 Overflow	TF0	2
External Interrupt 1	IE1	3
Timer 1 Overflow	TF1	4
Serial Port	RI + TI	5
Timer 2 Overflow	TF2 + EXF2	6
Serial Port 1	RI_1 + TI_1	7
External Interrupt 2	IE2	8
External Interrupt 3	IE3	9
External Interrupt 4	IE4	10
External Interrupt 5	IE5	11
Watchdog Timer	WDIF	12 (lowest)

The interrupt flags are sampled every machine cycle. In the same machine cycle, the sampled interrupts are polled and their priority is resolved. If certain conditions are met then the hardware will execute an internally generated LCALL instruction which will vector the process to the appropriate interrupt vector address. The conditions for generating the LCALL are

1. An interrupt of equal or higher priority is not currently being serviced.
2. The current polling cycle is the last machine cycle of the instruction currently being executed.
3. The current instruction does not involve a write to IP, IE, EIP or EIE registers and is not a RETI.

If any of these conditions are not met, then the LCALL will not be generated. The polling cycle is repeated every machine cycle, with the interrupts sampled in the same machine cycle. If an interrupt flag is active in one cycle but not responded to, and is not active when the above conditions are met, the denied interrupt will not be serviced. This means that active interrupts are not remembered; every polling cycle is new.

The processor responds to a valid interrupt by executing an LCALL instruction to the appropriate service routine. This may or may not clear the flag which caused the interrupt. In case of Timer interrupts, the TF0 or TF1 flags are cleared by hardware whenever the processor vectors to the appropriate timer service routine. In case of external interrupt, INT0 and INT1, the flags are cleared only if they are edge triggered. In case of Serial interrupts, the flags are not cleared by hardware. In the case of Timer 2 interrupt, the flags are not cleared by hardware. The Power-Fail interrupt PFI flag and Watchdog timer interrupt flag WDIF have to be cleared by software. The hardware LCALL behaves exactly like the software LCALL instruction. This instruction saves the Program Counter contents onto the Stack, but does not save the Program Status Word PSW. The PC is reloaded with the vector address of that interrupt which caused the LCALL. These vector address for the different sources are as follows.

Table 8. Vector locations for interrupt sources

SOURCE	VECTOR ADDRESS	SOURCE	VECTOR ADDRESS
Timer 0 Overflow	000Bh	External Interrupt 0	0003h
Timer 1 Overflow	001Bh	External Interrupt 1	0013h
Timer 2 Interrupt	002Bh	Serial Port	0023h
External Interrupt 2	0043h	Serial Port 1	003Bh
External Interrupt 4	0053h	External Interrupt 3	004Bh
Watchdog Timer	0063h	External Interrupt 5	005Bh

The vector table is not evenly spaced; this is to accommodate future expansions to the device family.

Execution continues from the vectored address till an RETI instruction is executed. On execution of the RETI instruction the processor pops the Stack and loads the PC with the contents at the top of the stack. The user must take care that the status of the stack is restored to what is was after the hardware LCALL, if the execution is to return to the interrupted program. The processor does not notice anything if the stack contents are modified and will proceed with execution from the address put back into PC. Note that a RET instruction would perform exactly the same process as a RETI instruction, but it would not inform the Interrupt Controller that the interrupt service routine is completed, and would leave the controller still thinking that the service routine is underway.

Interrupt Response Time

The response time for each interrupt source depends on several factors, such as the nature of the interrupt and the instruction underway. In the case of external interrupts $\overline{\text{INT0}}$ to $\overline{\text{INT5}}$, they are sampled at C3 of every machine cycle and then their corresponding interrupt flags IEx will be set or reset. The Timer 0 and 1 overflow flags are set at C3 of the machine cycle in which overflow has occurred. These flag values are polled only in the next machine cycle. If a request is active and all three conditions are met, then the hardware generated LCALL is executed. This LCALL itself takes four machine cycles to be completed. Thus there is a minimum time of five machine cycles between the interrupt flag being set and the interrupt service routine being executed.

A longer response time should be anticipated if any of the three conditions are not met. If a higher or equal priority is being serviced, then the interrupt latency time obviously depends on the nature of the service routine currently being executed. If the polling cycle is not the last machine cycle of the instruction being executed, then an additional delay is introduced. The maximum response time (if no other interrupt is in service) occurs if the W77C32 is performing a write to IE, IP, EIE or EIP and then

executes a MUL or DIV instruction. From the time an interrupt source is activated, the longest reaction time is 12 machine cycles. This includes 1 machine cycle to detect the interrupt, 2 machine cycles to complete the IE, IP, EIE or EIP access, 5 machine cycles to complete the MUL or DIV instruction and 4 machine cycles to complete the hardware LCALL to the interrupt vector location.

Thus in a single-interrupt system the interrupt response time will always be more than 5 machine cycles and not more than 12 machine cycles. The maximum latency of 12 machine cycle is 48 clock cycles. Note that in the standard 8051 the maximum latency is 8 machine cycles which equals 96 machine cycles. This is a 50% reduction in terms of clock periods.

PROGRAMMABLE TIMERS/COUNTERS

The W77C32 has three 16-bit programmable timer/counters and one programmable Watchdog timer. The Watchdog timer is operationally quite different from the other two timers.

Timer/Counters 0 & 1

The W77C32 has two 16-bit Timer/Counters. Each of these Timer/Counters has two 8 bit registers which form the 16 bit counting register. For Timer/Counter 0 they are TH0, the upper 8 bits register, and TL0, the lower 8 bit register. Similarly Timer/Counter 1 has two 8 bit registers, TH1 and TL1. The two can be configured to operate either as timers, counting machine cycles or as counters counting external inputs.

When configured as a "Timer", the timer counts clock cycles. The timer clock can be programmed to be thought of as 1/12 of the system clock or 1/4 of the system clock. In the "Counter" mode, the register is incremented on the falling edge of the external input pin, T0 in case of Timer 0, and T1 for Timer 1. The T0 and T1 inputs are sampled in every machine cycle at C4. If the sampled value is high in one machine cycle and low in the next, then a valid high to low transition on the pin is recognized and the count register is incremented. Since it takes two machine cycles to recognize a negative transition on the pin, the maximum rate at which counting will take place is 1/24 of the master clock frequency. In either the "Timer" or "Counter" mode, the count register will be updated at C3. Therefore, in the "Timer" mode, the recognized negative transition on pin T0 and T1 can cause the count register value to be updated only in the machine cycle following the one in which the negative edge was detected.

The "Timer" or "Counter" function is selected by the "C/$\overline{T}$" bit in the TMOD Special Function Register. Each Timer/Counter has one selection bit for its own; bit 2 of TMOD selects the function for Timer/Counter 0 and bit 6 of TMOD selects the function for Timer/Counter 1. In addition each Timer/Counter can be set to operate in any one of four possible modes. The mode selection is done by bits M0 and M1 in the TMOD SFR.

Time-base Selection

The W77C32 gives the user two modes of operation for the timer. The timers can be programmed to operate like the standard 8051 family, counting at the rate of 1/12 of the clock speed. This will ensure that timing loops on the W77C32 and the standard 8051 can be matched. This is the default mode of operation of the W77C32 timers. The user also has the option to count in the turbo mode, where the timers will increment at the rate of 1/4 clock speed. This will straight-away increase the counting speed three times. This selection is done by the T0M and T1M bits in CKCON SFR. A reset sets these bits to 0, and the timers then operate in the standard 8051 mode. The user should set these bits to 1 if the timers are to operate in turbo mode.

Mode 0

In Mode 0, the timer/counters act as a 8 bit counter with a 5 bit, divide by 32 pre-scale. In this mode we have a 13 bit timer/counter. The 13 bit counter consists of 8 bits of THx and 5 lower bits of TLx. The upper 3 bits of TLx are ignored.

The negative edge of the clock increments the count in the TLx register. When the fifth bit in TLx moves from 1 to 0, then the count in the THx register is incremented. When the count in THx moves from FFh to 00h, then the overflow flag TFx in TCON SFR is set. The counted input is enabled only if TRx is set and either GATE = 0 or $\overline{INTx}$ = 1. When C/$\overline{T}$ is set to 0, then it will count clock cycles, and if C/$\overline{T}$ is set to 1, then it will count 1 to 0 transitions on T0 (P3.4) for timer 0 and T1 (P3.5) for timer 1. When the 13 bit count reaches 1FFFh the next count will cause it to roll-over to 0000h. The timer overflow flag TFx of the relevant timer is set and if enabled an interrupts will occur. Note that when used as a timer, the time-base may be either clock cycles/12 or clock cycles/4 as selected by the bits TxM of the CKCON SFR.

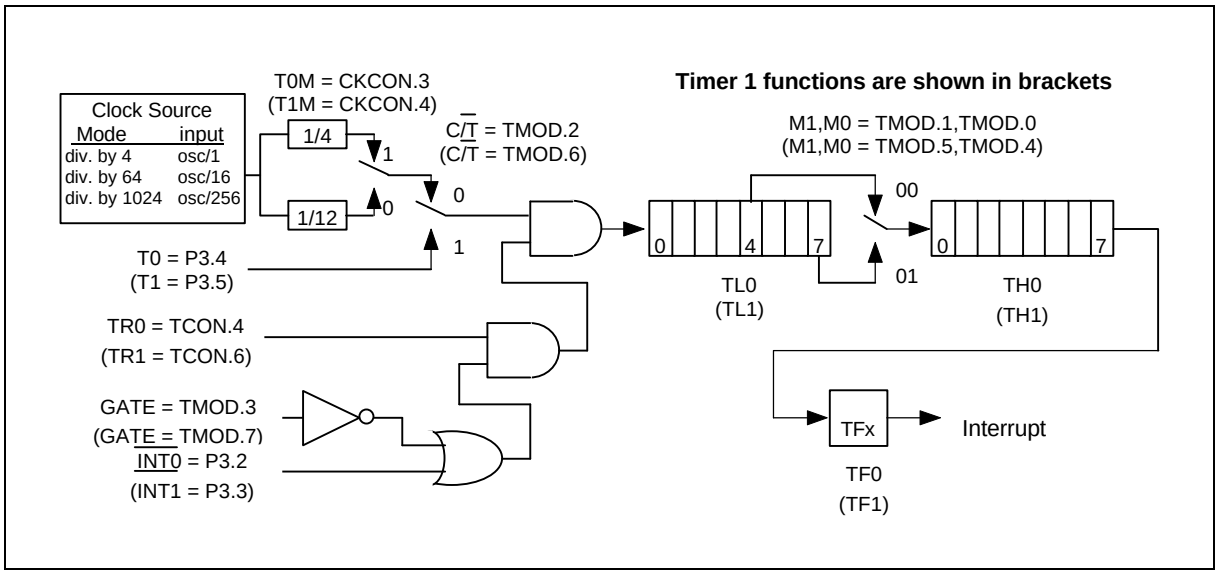

Figure 11: Timer/Counter Mode 0 & Mode 1

Mode 1

Mode 1 is similar to Mode 0 except that the counting register forms a 16 bit counter, rather than a 13 bit counter. This means that all the bits of THx and TLx are used. Roll-over occurs when the timer moves from a count of FFFFh to 0000h. The timer overflow flag TFx of the relevant timer is set and if enabled an interrupt will occur. The selection of the time-base in the timer mode is similar to that in Mode 0. The gate function operates similarly to that in Mode 0.

Mode 2

In Mode 2, the timer/counter is in the Auto Reload Mode. In this mode, TLx acts as a 8 bit count register, while THx holds the reload value. When the TLx register overflows from FFh to 00h, the TFx bit in TCON is set and TLx is reloaded with the contents of THx, and the counting process continues from here. The reload operation leaves the contents of the THx register unchanged. Counting is

enabled by the TRx bit and proper setting of GATE and $\overline{INTx}$ pins. As in the other two modes 0 and 1, mode 2 allows counting of either clock cycles (clock/12 or clock/4) or pulses on pin Tn.

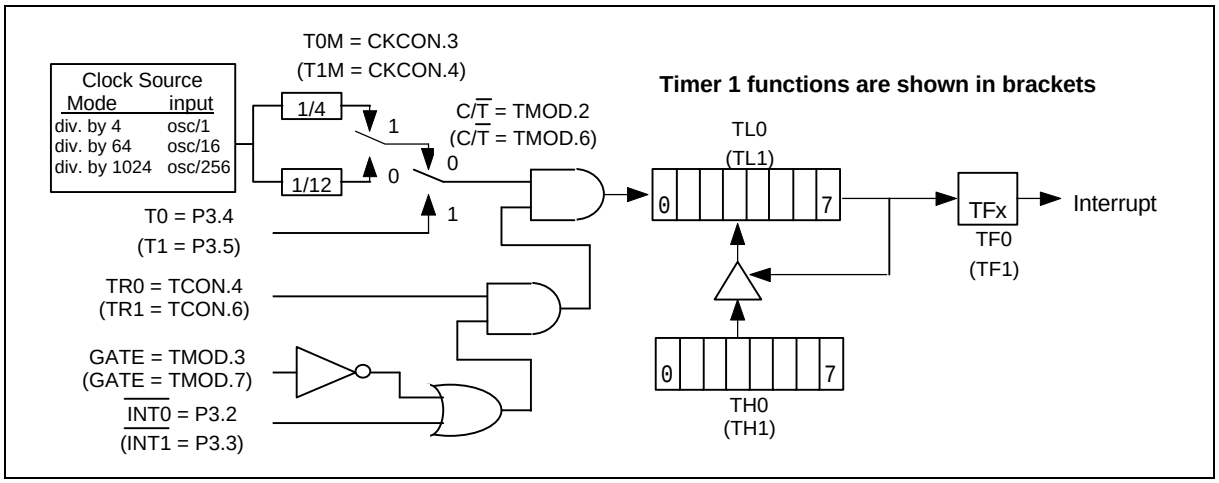

Figure 12: Timer/Counter Mode 2

Mode 3

Mode 3 has different operating methods for the two timer/counters. For timer/counter 1, mode 3 simply freezes the counter. Timer/Counter 0, however, configures TL0 and TH0 as two separate 8 bit count registers in this mode. The logic for this mode is shown in the figure. TL0 uses the Timer/Counter 0 control bits C/$\overline{T}$, GATE, TR0, $\overline{INT0}$ and TF0. The TL0 can be used to count clock cycles (clock/12 or clock/4) or 1-to-0 transitions on pin T0 as determined by C/$\overline{T}$ (TMOD.2). TH0 is forced as a clock cycle counter (clock/12 or clock/4) and takes over the use of TR1 and TF1 from Timer/Counter 1. Mode 3 is used in cases where an extra 8 bit timer is needed. With Timer 0 in Mode 3, Timer 1 can still be used in Modes 0, 1 and 2., but its flexibility is somewhat limited. While its basic functionality is maintained, it no longer has control over its overflow flag TF1 and the enable bit TR1. Timer 1 can still be used as a timer/counter and retains the use of GATE and INT1 pin. In this condition it can be turned on and off by switching it out of and into its own Mode 3. It can also be used as a baud rate generator for the serial port.

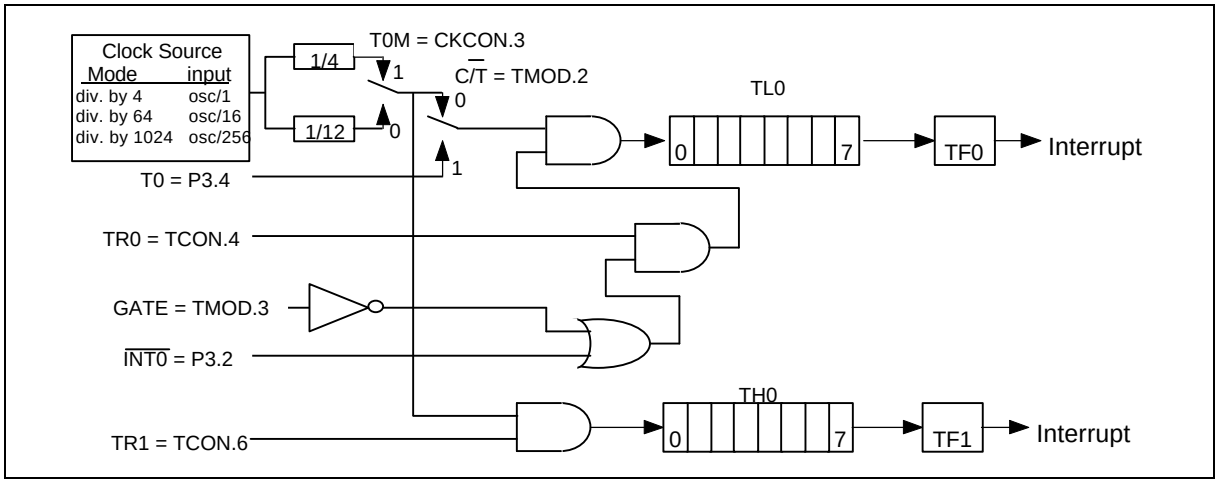

Figure 13. Timer/Counter 0 Mode 3

Timer/Counter 2

Timer/Counter 2 is a 16 bit up/down counter which is configured by the T2MOD register and controlled by the T2CON register. Timer/Counter 2 is equipped with a capture/reload capability. As with the Timer 0 and Timer 1 counters, there exists considerable flexibility in selecting and controlling the clock, and in defining the operating mode. The clock source for Timer/Counter 2 may be selected for either the external T2 pin (C/$\overline{T2}$ = 1) or the crystal oscillator, which is divided by 12 or 4 (C/$\overline{T2}$ = 0). The clock is then enabled when TR2 is a 1, and disabled when TR2 is a 0.

Capture Mode

The capture mode is enabled by setting the CP/$\overline{RL2}$ bit in the T2CON register to a 1. In the capture mode, Timer/Counter 2 serves as a 16 bit up counter. When the counter rolls over from FFFFh to 0000h, the TF2 bit is set, which will generate an interrupt request. If the EXEN2 bit is set, then a negative transition of T2EX pin will cause the value in the TL2 and TH2 register to be captured by the RCAP2L and RCAP2H registers. This action also causes the EXF2 bit in T2CON to be set, which will also generate an interrupt. Setting the T2CR bit (T2MOD.3), the W77C32 allows hardware to reset timer 2 automatically after the value of TL2 and TH2 have been captured.

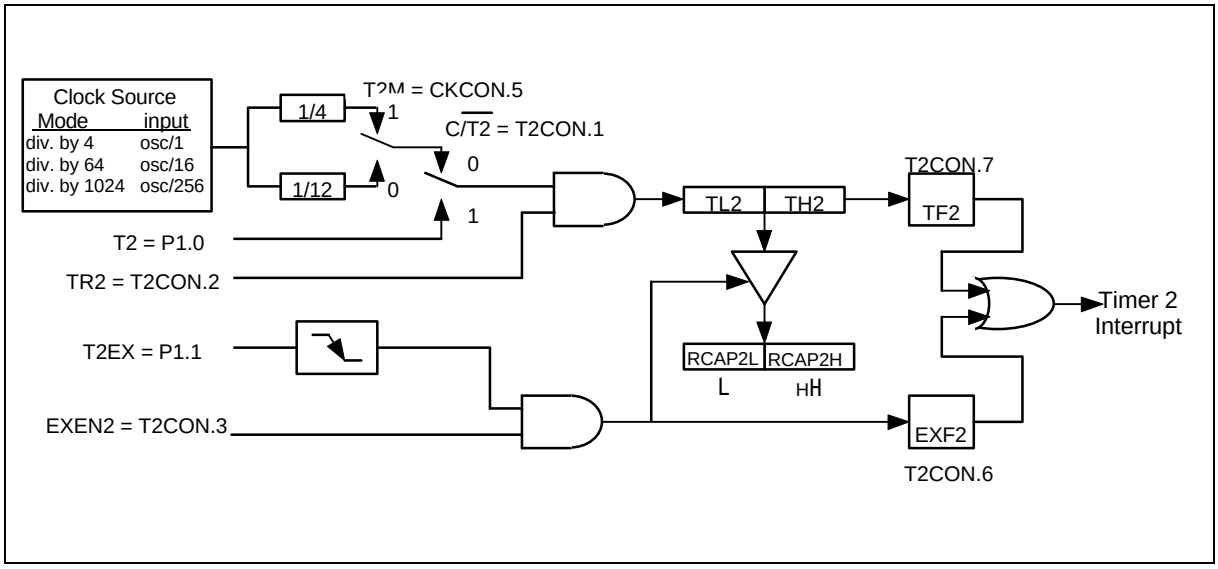

Figure 14. 16-Bit Capture Mode

Auto-reload Mode, Counting Up

The auto-reload mode as an up counter is enabled by clearing the CP/$\overline{RL2}$ bit in the T2CON register and clearing the DCEN bit in T2MOD register. In this mode, Timer/Counter 2 is a 16 bit up counter. When the counter rolls over from FFFFh, a reload is generated that causes the contents of the RCAP2L and RCAP2H registers to be reloaded into the TL2 and TH2 registers. The reload action also sets the TF2 bit. If the EXEN2 bit is set, then a negative transition of T2EX pin will also cause a reload. This action also sets the EXF2 bit in T2CON.

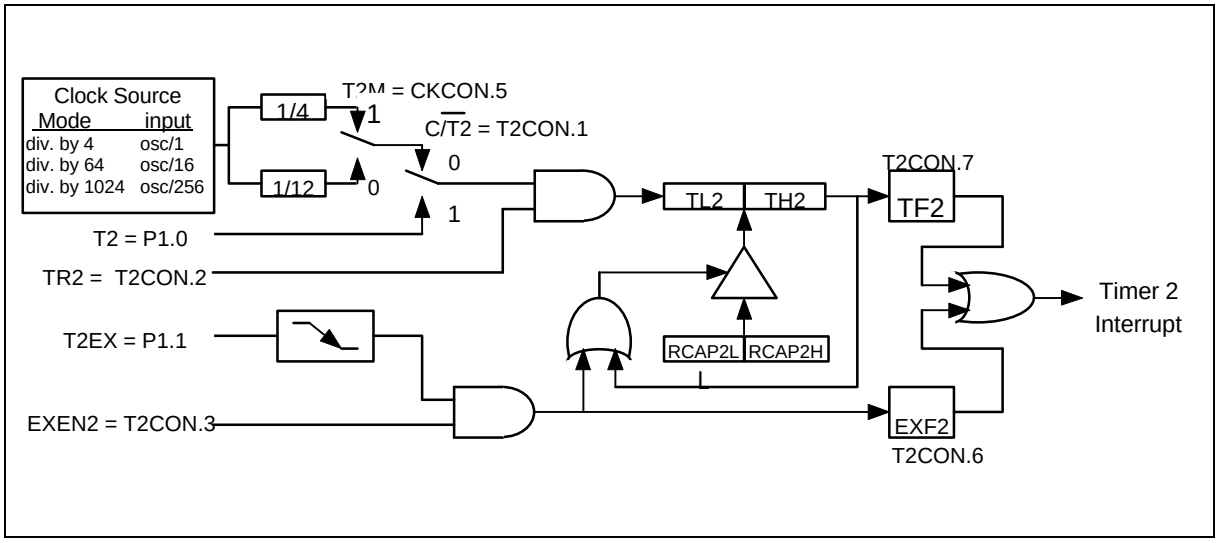

Figure 15. 16-Bit Auto-reload Mode, Counting Up

Auto-reload Mode, Counting Up/Down

Timer/Counter 2 will be in auto-reload mode as an up/down counter if CP/$\overline{RL2}$ bit in T2CON is cleared and the DCEN bit in T2MOD is set. In this mode, Timer/Counter 2 is an up/down counter whose direction is controlled by the T2EX pin. A 1 on this pin cause the counter to count up. An overflow while counting up will cause the counter to be reloaded with the contents of the capture registers. The next down count following the case where the contents of Timer/Counter equal the capture registers will load an FFFFh into Timer/Counter 2. In either event a reload will set the TF2 bit. A reload will also toggle the EXF2 bit. However, the EXF2 bit can not generate an interrupt while in this mode.

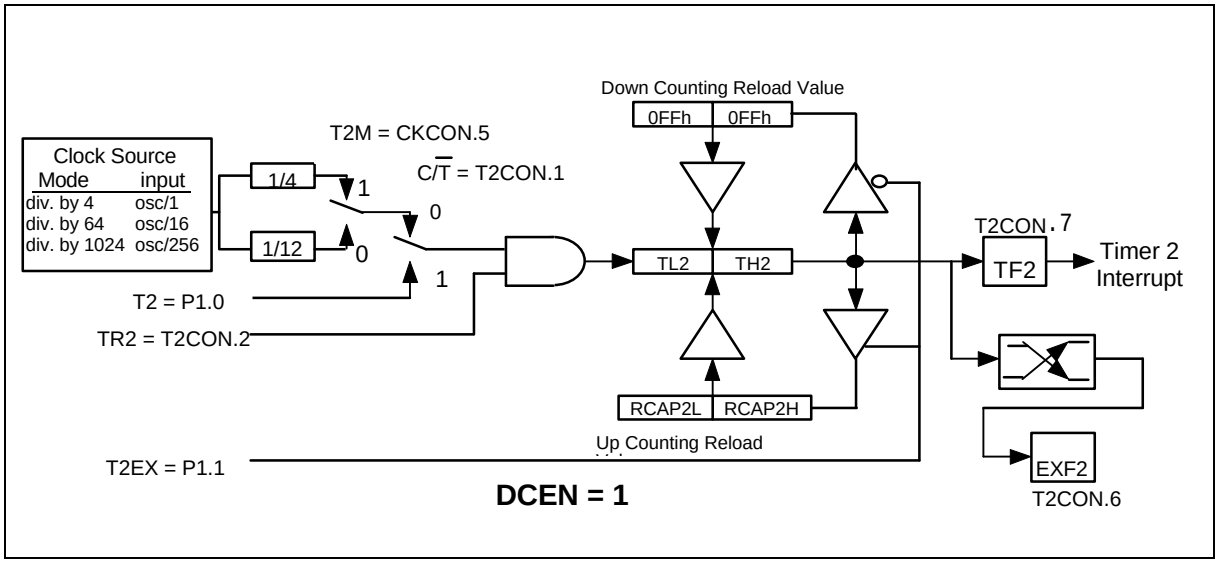

Figure 16. 16-Bit Auto-reload Up/Down Counter

BAUD RATE GENERATOR MODE

The baud rate generator mode is enabled by setting either the RCLK or TCLK bits in T2CON register. While in the baud rate generator mode, Timer/Counter 2 is a 16 bit counter with auto reload when the count rolls over from FFFFh. However, rolling over does not set the TF2 bit. If EXEN2 bit is set, then a negative transition of the T2EX pin will set EXF2 bit in the T2CON register and cause an interrupt request.

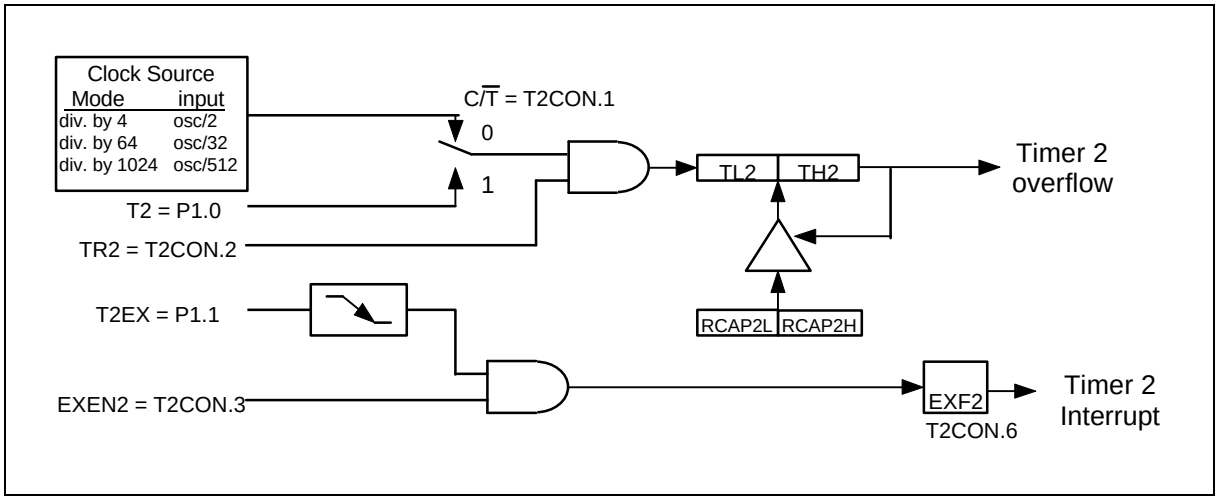

Figure 17. Baud Rate Generator Mode

Programmable Clock-out

Timer 2 is equipped with a new clock-out feature which outputs a 50% duty cycle clock on P1.0. It can be invoked as a programmable clock generator. To configure Timer 2 with clock-out mode, software must initiate it by setting bit T2OE = 1, C/T2 = 0 and CP/RL = 0. Setting bit TR2 will start the timer. This mode is similar to the baud rate generator mode, it will not generate an interrupt while Timer 2 overflow. So it is possible to use Timer 2 as a baud rate generator and a clock generator at the same time. The clock-out frequency is determined by the following equation:

The Clock-out Frequency = Oscillator Frequency / [4 X (RCAP2H,RCAP2L)]

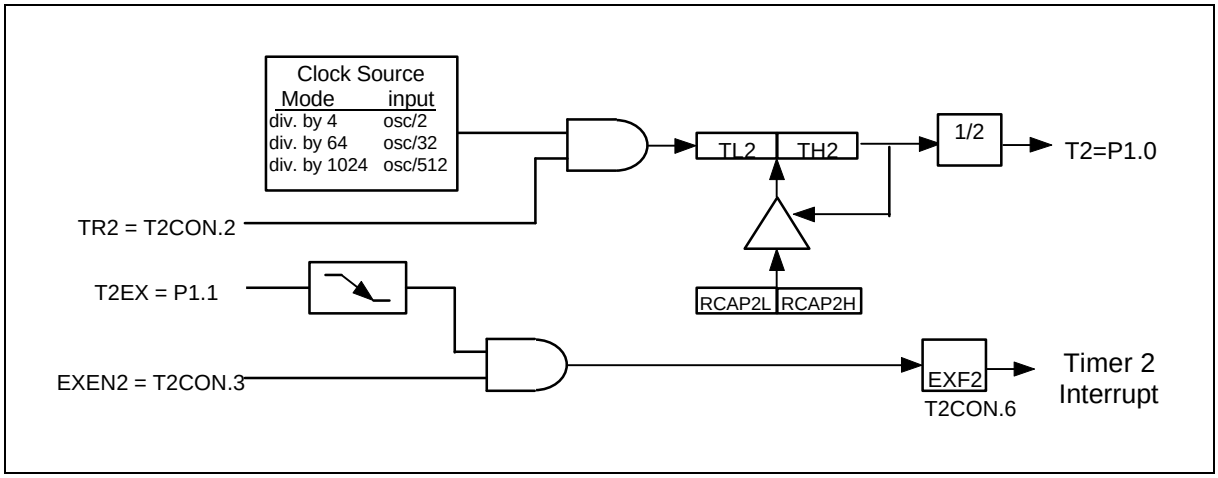

Figure 18. Programmable Clock-Out Mode

Watchdog Timer

The Watchdog timer is a free-running timer which can be programmed by the user to serve as a system monitor, a time-base generator or an event timer. It is basically a set of dividers that divide the system clock. The divider output is selectable and determines the time-out interval. When the time-out occurs a flag is set, which can cause an interrupt if enabled, and a system reset can also be caused if it is enabled. The interrupt will occur if the individual interrupt enable and the global enable are set. The interrupt and reset functions are independent of each other and may be used separately or together depending on the users software.

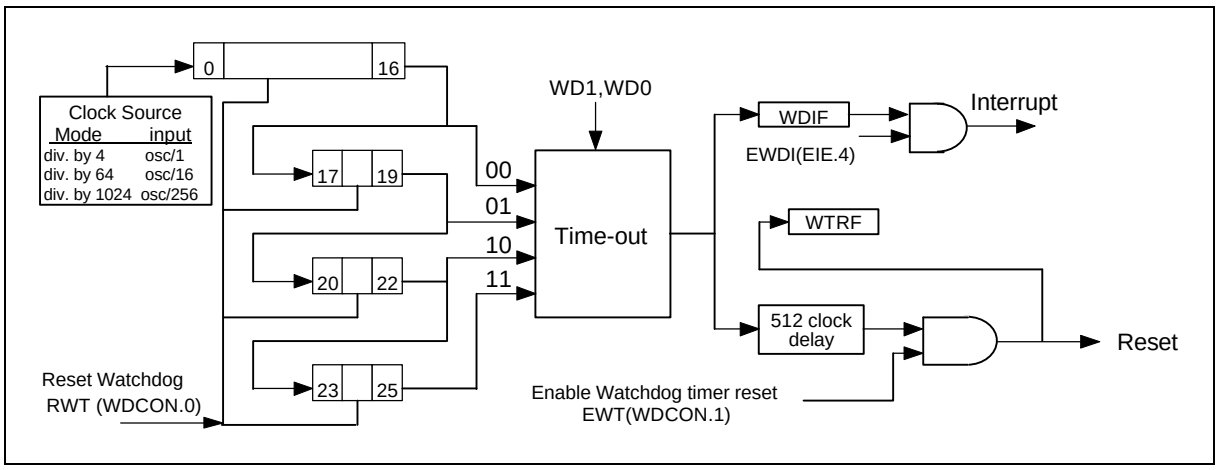

Figure 19. Watchdog Timer

The Watchdog timer should first be restarted by using RWT. This ensures that the timer starts from a known state. The RWT bit is used to restart the watchdog timer. This bit is self clearing, i.e. after writing a 1 to this bit the software will automatically clear it. The watchdog timer will now count clock cycles. The time-out interval is selected by the two bits WD1 and WD0 (CKCON.7 and CKCON.6). When the selected time-out occurs, the Watchdog interrupt flag WDIF (WDCON.3) is set. After the time-out has occurred, the watchdog timer waits for an additional 512 clock cycles. If the Watchdog Reset EWT (WDCON.1) is enabled, then 512 clocks after the time-out, if there is no RWT, a system reset due to Watchdog timer will occur. This will last for two machine cycles, and the Watchdog timer reset flag WTRF (WDCON.2) will be set. This indicates to the software that the watchdog was the cause of the reset.

When used as a simple timer, the reset and interrupt functions are disabled. The timer will set the WDIF flag each time the timer completes the selected time interval. The WDIF flag is polled to detect a time-out and the RWT allows software to restart the timer. The Watchdog timer can also be used as a very long timer. The interrupt feature is enabled in this case. Every time the time-out occurs an interrupt will occur if the global interrupt enable EA is set.

The main use of the Watchdog timer is as a system monitor. This is important in real-time control applications. In case of some power glitches or electro-magnetic interference, the processor may begin to execute errant code. If this is left unchecked the entire system may crash. Using the watchdog timer interrupt during software development will allow the user to select ideal watchdog reset locations. The code is first written without the watchdog interrupt or reset. Then the watchdog interrupt is enabled to identify code locations where interrupt occurs. The user can now insert instructions to reset the watchdog timer which will allow the code to run without any watchdog timer interrupts. Now the watchdog timer reset is enabled and the watchdog interrupt may be disabled,. If

any errant code is executed now, then the reset watchdog timer instructions will not be executed at the required instants and watchdog reset will occur.

The watchdog time-out selection will result in different time-out values depending on the clock speed. The reset, when enabled, will occur 512 clocks after the time-out has occurred.

Table 9. Time-out values for the Watchdog timer

WD1	WD0	WATCHDOGI NTERVAL	NUMBER OF CLOCKS	TIME @1.8432 MHz	TIME @10 MHz	TIME @25 MHz
0	0	2^{17}	131072	71.11 mS	13.11 mS	5.24 mS
0	1	2^{20}	1048576	568.89 mS	104.86 mS	41.94 mS
1	0	2^{23}	8388608	4551.11 mS	838.86 mS	335.54 mS
1	1	2^{26}	67108864	36408.88 mS	6710.89 mS	2684.35 mS

The Watchdog timer will de disabled by a power-on/fail reset. The Watchdog timer reset does not disable the watchdog timer, but will restart it. In general, software should restart the timer to put it into a known state.

The control bits that support the Watchdog timer are discussed below.

WATCHDOG CONTROL

WDIF: WDCON.3 - Watchdog Timer Interrupt flag. This bit is set whenever the time-out occurs in the watchdog timer. If the Watchdog interrupt is enabled (EIE.4), then an interrupt will occur (if the global interrupt enable is set and other interrupt requirements are met). Software or any reset can clear this bit.

WTRF: WDCON.2 - Watchdog Timer Reset flag. This bit is set whenever a watchdog reset occurs. This bit is useful for determined the cause of a reset. Software must read it, and clear it manually. A Power-fail reset will clear this bit. If EWT = 0, then this bit will not be affected by the watchdog timer.

EWT: WDCON.1 - Enable Watchdog timer Reset. This bit when set to 1 will enable the Watchdog timer reset function. Setting this bit to 0 will disable the Watchdog timer reset function, but will leave the timer running

RWT: WDCON.0 - Reset Watchdog Timer. This bit is used to clear the Watchdog timer and to restart it. This bit is self-clearing, so after the software writes 1 to it the hardware will automatically clear it. If the Watchdog timer reset is enabled, then the RWT has to be set by the user within 512 clocks of the time-out. If this is not done then a Watchdog timer reset will occur.

CLOCK CONTROL

WD1,WD0: CKCON.7, CKCON.6 - Watchdog Timer Mode select bits. These two bits select the time-out interval for the watchdog timer. The reset time is 512 clock longer than the interrupt time-out value.

The default Watchdog time-out is 2^{17} clocks, which is the shortest time-out period. The EWT, WDIF and RWT bits are protected by the Timed Access procedure. This prevents software from accidentally enabling or disabling the watchdog timer. More importantly, it makes it highly improbable that errant code can enable or disable the watchdog timer.

Serial Port

Serial port in the W77C32 is a full duplex port. The W77C32 provides the user with additional features such as the Frame Error Detection and the Automatic Address Recognition. The serial ports are capable of synchronous as well as asynchronous communication. In Synchronous mode the W77C32 generates the clock and operates in a half duplex mode. In the asynchronous mode, full duplex operation is available. This means that it can simultaneously transmit and receive data. The transmit register and the receive buffer are both addressed as SBUF Special Function Register. However any write to SBUF will be to the transmit register, while a read from SBUF will be from the receive buffer register. The serial port can operate in four different modes as described below.

Mode 0

This mode provides synchronous communication with external devices. In this mode serial data is transmitted and received on the RXD line. TXD is used to transmit the shift clock. The TxD clock is provided by the W77C32 whether the device is transmitting or receiving. This mode is therefore a half duplex mode of serial communication. In this mode, 8 bits are transmitted or received per frame. The LSB is transmitted/received first. The baud rate is fixed at 1/12 or 1/4 of the oscillator frequency. This baud rate is determined by the SM2 bit (SCON.5). When this bit is set to 0, then the serial port runs at 1/12 of the clock. When set to 1, the serial port runs at 1/4 of the clock. This additional facility of programmable baud rate in mode 0 is the only difference between the standard 8051 and the W77C32.

The functional block diagram is shown below. Data enters and leaves the Serial port on the RxD line. The TxD line is used to output the shift clock. The shift clock is used to shift data into and out of the W77C32 and the device at the other end of the line. Any instruction that causes a write to SBUF will start the transmission. The shift clock will be activated and data will be shifted out on the RxD pin till all 8 bits are transmitted. If SM2 = 1, then the data on RxD will appear 1 clock period before the falling edge of shift clock on TxD. The clock on TxD then remains low for 2 clock periods, and then goes high again. If SM2 = 0, the data on RxD will appear 3 clock periods before the falling edge of shift clock on TxD. The clock on TxD then remains low for 6 clock periods, and then goes high again. This ensures that at the receiving end the data on RxD line can either be clocked on the rising edge of the shift clock on TxD or latched when the TxD clock is low.

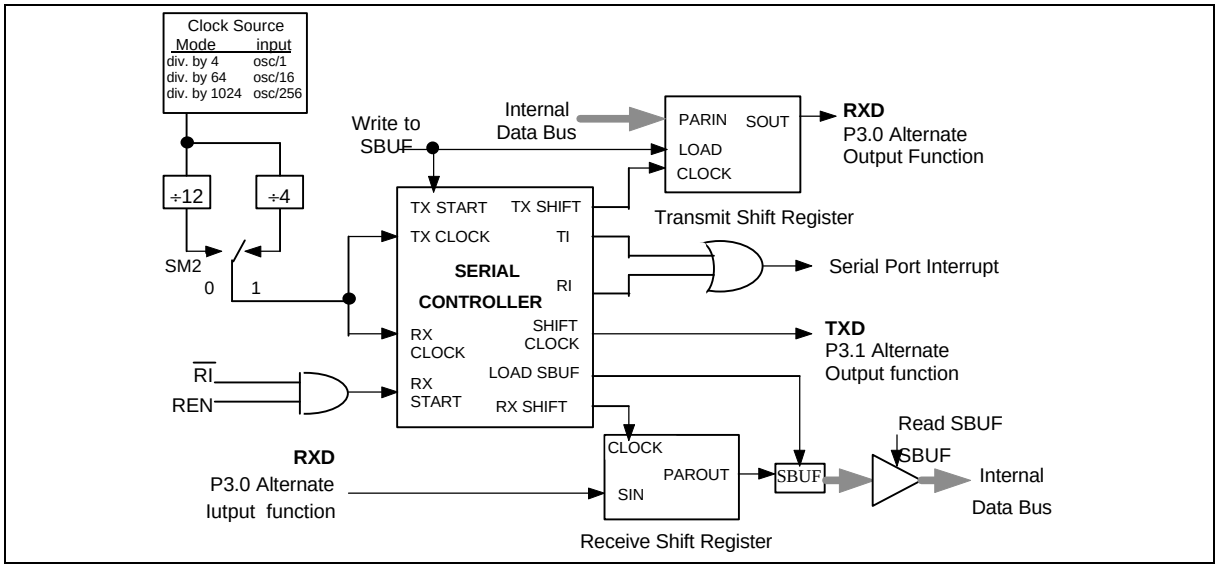

Figure 20. Serial Port Mode 0

The TI flag is set high in C1 following the end of transmission of the last bit. The serial port will receive data when REN is 1 and RI is zero. The shift clock (TxD) will be activated and the serial port will latch data on the rising edge of shift clock. The external device should therefore present data on the falling edge on the shift clock. This process continues till all the 8 bits have been received. The RI flag is set in C1 following the last rising edge of the shift clock on TxD. This will stop reception, till the RI is cleared by software.

Mode 1

In Mode 1, the full duplex asynchronous mode is used. Serial communication frames are made up of 10 bits transmitted on TXD and received on RXD. The 10 bits consist of a start bit (0), 8 data bits (LSB first), and a stop bit (1). On receive, the stop bit goes into RB8 in the SFR SCON. The baud rate in this mode is variable. The serial baud can be programmed to be 1/16 or 1/32 of the Timer 1 overflow. Since the Timer 1 can be set to different reload values, a wide variation in baud rates is possible.

Transmission begins with a write to SBUF. The serial data is brought out on to TxD pin at C1 following the first roll-over of divide by 16 counter. The next bit is placed on TxD pin at C1 following the next rollover of the divide by 16 counter. Thus the transmission is synchronized to the divide by 16 counter and not directly to the write to SBUF signal. After all 8 bits of data are transmitted, the stop bit is transmitted. The TI flag is set in the C1 state after the stop bit has been put out on TxD pin. This will be at the 10th rollover of the divide by 16 counter after a write to SBUF.

Reception is enabled only if REN is high. The serial port actually starts the receiving of serial data, with the detection of a falling edge on the RxD pin. The 1-to-0 detector continuously monitors the RxD line, sampling it at the rate of 16 times the selected baud rate. When a falling edge is detected, the divide by 16 counter is immediately reset. This helps to align the bit boundaries with the rollovers of the divide by 16 counter.

The 16 states of the counter effectively divide the bit time into 16 slices. The bit detection is done on a best of three basis. The bit detector samples the RxD pin, at the 8th, 9th and 10th counter states. By using a majority 2 of 3 voting system, the bit value is selected. This is done to improve the noise rejection feature of the serial port. If the first bit detected after the falling edge of RxD pin is not 0, then this indicates an invalid start bit, and the reception is immediately aborted. The serial port again looks for a falling edge in the RxD line. If a valid start bit is detected, then the rest of the bits are also detected and shifted into the SBUF.

After shifting in 8 data bits, there is one more shift to do, after which the SBUF and RB8 are loaded and RI is set. However certain conditions must be met before the loading and setting of RI can be done.

1. RI must be 0 and
2. Either SM2 = 0, or the received stop bit = 1.

If these conditions are met, then the stop bit goes to RB8, the 8 data bits go into SBUF and RI is set. Otherwise the received frame may be lost. After the middle of the stop bit, the receiver goes back to looking for a 1-to-0 transition on the RxD pin.

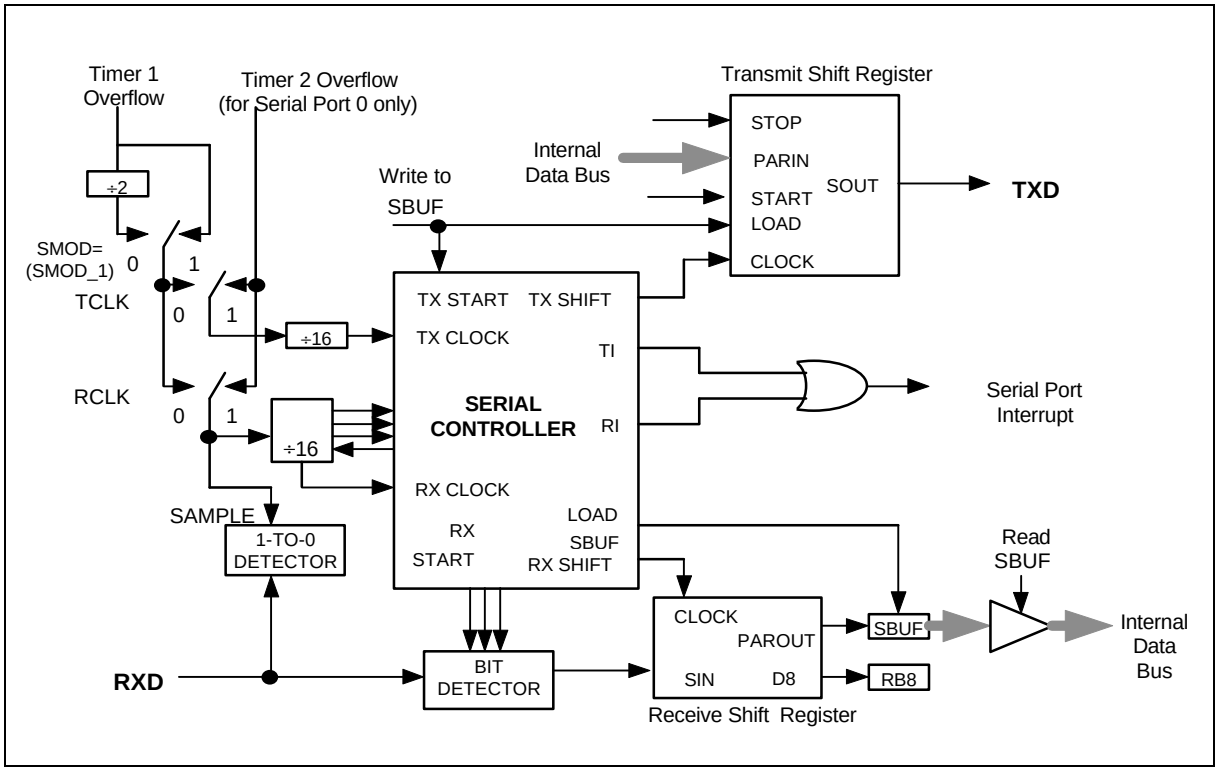

Figure 21: Serial Port Mode

Mode 2

This mode uses a total of 11 bits in asynchronous full-duplex communication. The functional description is shown in the figure below. The frame consists of one start bit (0), 8 data bits (LSB first), a programmable 9th bit (TB8) and a stop bit (0). The 9th bit received is put into RB8. The baud rate is programmable to 1/32 or 1/64 of the oscillator frequency, which is determined by the SMOD bit in PCON SFR. Transmission begins with a write to SBUF. The serial data is brought out on to TxD pin at C1 following the first roll-over of the divide by 16 counter. The next bit is placed on TxD pin at C1 following the next rollover of the divide by 16 counter. Thus the transmission is synchronized to the divide by 16 counter, and not directly to the write to SBUF signal. After all 9 bits of data are transmitted, the stop bit is transmitted. The TI flag is set in the C1 state after the stop bit has been put out on TxD pin. This will be at the 11th rollover of the divide by 16 counter after a write to SBUF. Reception is enabled only if REN is high. The serial port actually starts the receiving of serial data, with the detection of a falling edge on the RxD pin. The 1-to-0 detector continuously monitors the RxD line, sampling it at the rate of 16 times the selected baud rate. When a falling edge is detected, the divide by 16 counter is immediately reset. This helps to align the bit boundaries with the rollovers of the divide by 16 counter. The 16 states of the counter effectively divide the bit time into 16 slices. The bit detection is done on a best of three basis. The bit detector samples the RxD pin, at the 8th, 9th and 10th counter states. By using a majority 2 of 3 voting system, the bit value is selected. This is done to improve the noise rejection feature of the serial port. If the first bit detected after the falling edge of RxD pin, is not 0, then this indicates an invalid start bit, and the reception is immediately aborted. The serial port again looks for a falling edge in the RxD line. If a valid start bit is detected, then the rest of the bits are also detected and shifted into the SBUF. After shifting in 9 data bits, there

is one more shift to do, after which the SBUF and RB8 are loaded and RI is set. However certain conditions must be met before the loading and setting of RI can be done.

1. RI must be 0 and

2. Either SM2 = 0, or the received stop bit = 1.

If these conditions are met, then the stop bit goes to RB8, the 8 data bits go into SBUF and RI is set. Otherwise the received frame may be lost. After the middle of the stop bit, the receiver goes back to looking for a 1-to-0 transition on the RxD pin.

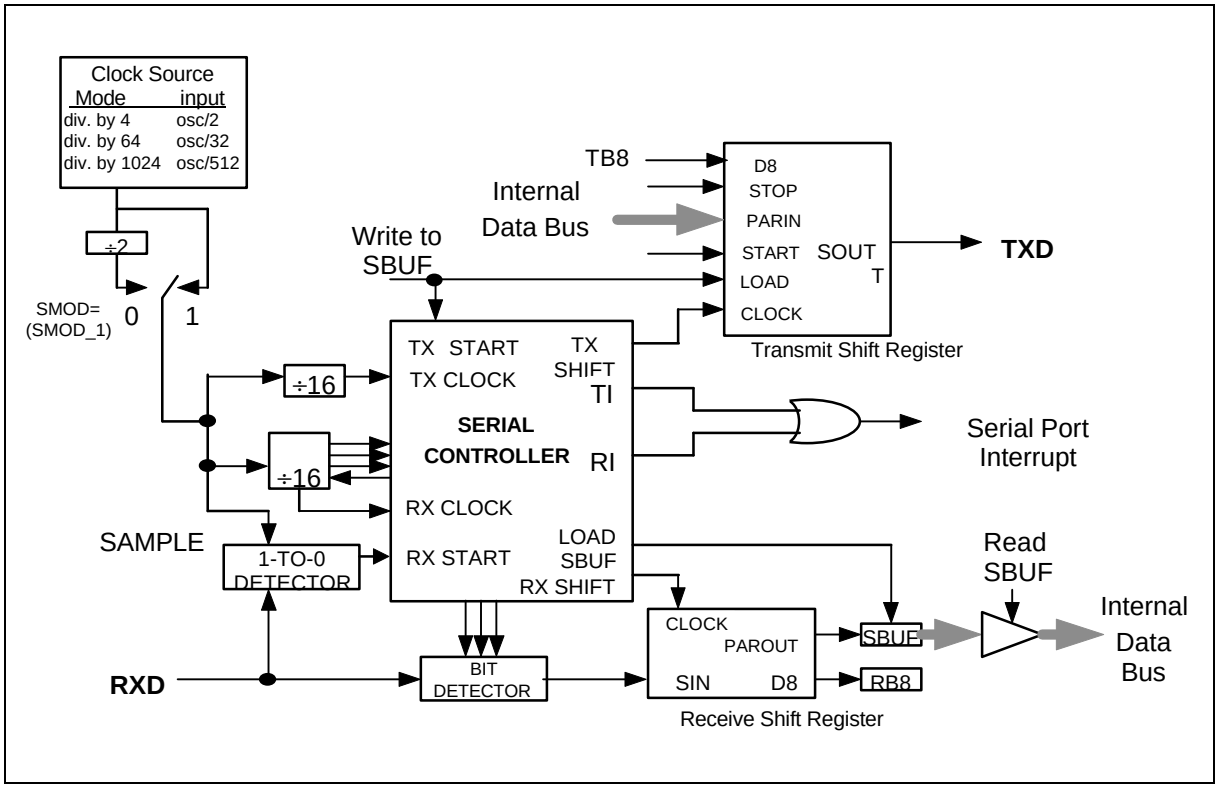

Figure 22. Serial Port Mode 2

Mode 3

This mode is similar to Mode 2 in all respects, except that the baud rate is programmable. The user must first initialize the Serial related SFR SCON before any communication can take place. This involves selection of the Mode and baud rate. The Timer 1 should also be initialized if modes 1 and 3 are used. In all four modes, transmission is started by any instruction that uses SBUF as a destination register. Reception is initiated in Mode 0 by the condition RI = 0 and REN = 1. This will generate a clock on the TxD pin and shift in 8 bits on the RxD pin. Reception is initiated in the other modes by the incoming start bit if REN = 1. The external device will start the communication by transmitting the start bit.

Table 10. Serial Ports Modes

SM1	SM0	MODE	TYPE	BAUD CLOCK	FRAME SIZE	START BIT	STOP BIT	9TH BIT FUNCTION
0	0	0	Synch.	4 or 12 TCLKs	8 bits	No	No	None
0	1	1	Asynch.	Timer 1 or 2	10 bits	1	1	None
1	0	2	Asynch.	32 or 64 TCLKs	11 bits	1	1	0, 1
1	1	3	Asynch.	Timer 1 or 2	11 bits	1	1	0, 1

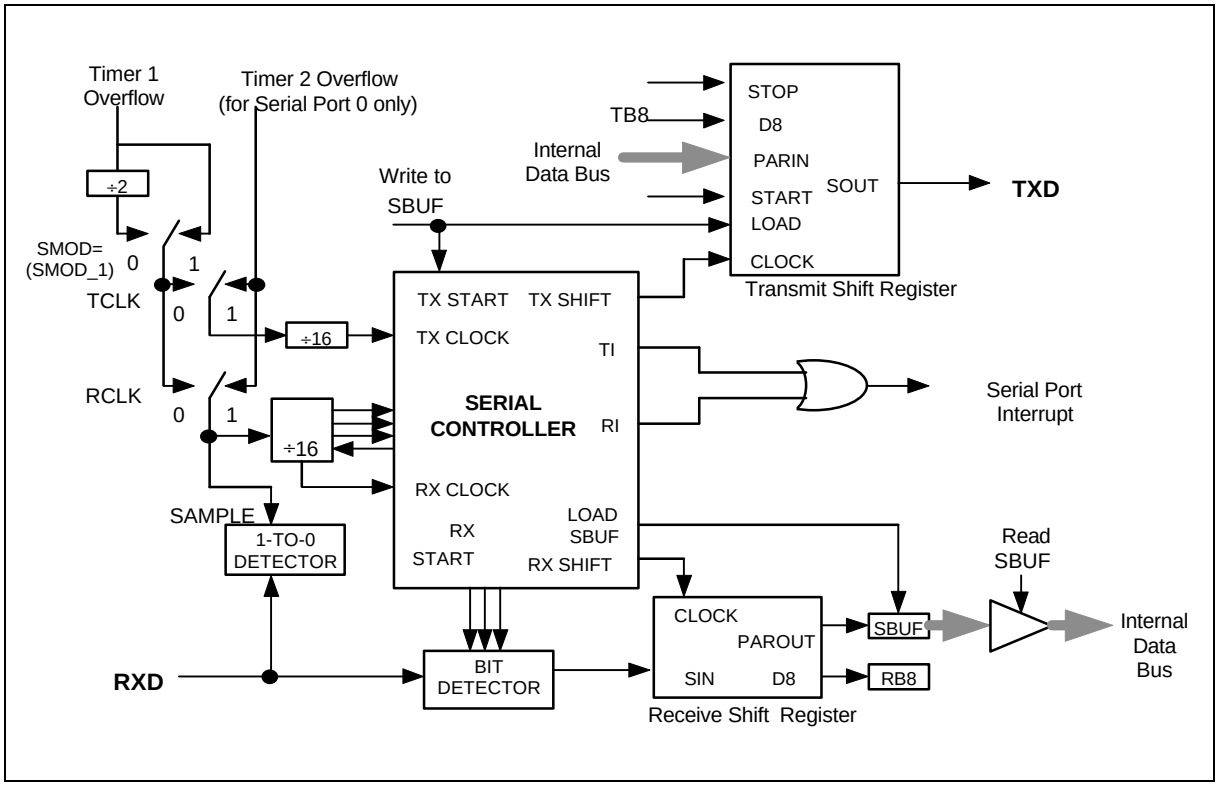

Figure 23: Serial Port Mode 3

Framing Error Detection

A Frame Error occurs when a valid stop bit is not detected. This could indicate incorrect serial data communication. Typically the frame error is due to noise and contention on the serial communication line. The W77C32 has the facility to detect such framing errors and set a flag which can be checked by software.

The Frame Error FE(FE_1) bit is located in SCON.7(SCON1.7). This bit is normally used as SM0 in the standard 8051 family. However, in the W77C32 it serves a dual function and is called SM0/FE (SM0_1/FE_1). There are actually two separate flags, one for SM0 and the other for FE. The flag that is actually accessed as SCON.7(SCON1.7) is determined by SMOD0 (PCON.6) bit. When SMOD0 is

set to 1, then the FE flag is indicated in SM0/FE. When SMOD0 is set to 0, then the SM0 flag is indicated in SM0/FE.

The FE bit is set to 1 by hardware but must be cleared by software. Note that SMOD0 must be 1 while reading or writing to FE or FE_1. If FE is set, then any following frames received without any error will not clear the FE flag. The clearing has to be done by software.

Multiprocessor Communications

Multiprocessor communications makes use of the 9th data bit in modes 2 and 3. In the W77C32, the RI flag is set only if the received byte corresponds to the Given or Broadcast address. This hardware feature eliminates the software overhead required in checking every received address, and greatly simplifies the software programmer task.

In the multiprocessor communication mode, the address bytes are distinguished from the data bytes by transmitting the address with the 9th bit set high. When the master processor wants to transmit a block of data to one of the slaves, it first sends out the address of the targeted slave (or slaves). All the slave processors should have their SM2 bit set high when waiting for an address byte. This ensures that they will be interrupted only by the reception of a address byte. The Automatic address recognition feature ensures that only the addressed slave will be interrupted. The address comparison is done in hardware not software.

The addressed slave clears the SM2 bit, thereby clearing the way to receive data bytes. With SM2 = 0, the slave will be interrupted on the reception of every single complete frame of data. The unaddressed slaves will be unaffected, as they will be still waiting for their address. In Mode 1, the 9th bit is the stop bit, which is 1 in case of a valid frame. If SM2 is 1, then RI is set only if a valid frame is received and the received byte matches the Given or Broadcast address.

The Master processor can selectively communicate with groups of slaves by using the Given Address. All the slaves can be addressed together using the Broadcast Address. The addresses for each slave are defined by the SADDR and SADEN SFRs. The slave address is an 8-bit value specified in the SADDR SFR. The SADEN SFR is actually a mask for the byte value in SADDR. If a bit position in SADEN is 0, then the corresponding bit position in SADDR is don't care. Only those bit positions in SADDR whose corresponding bits in SADEN are 1 are used to obtain the Given Address. This gives the user flexibility to address multiple slaves without changing the slave address in SADDR.

The following example shows how the user can define the Given Address to address different slaves.

Slave 1:

SADDR	1010 0100
SADEN	1111 1010
Given	1010 0x0x

Slave 2:

SADDR	1010 0111
SADEN	1111 1001
Given	1010 0xx1

The Given address for slave 1 and 2 differ in the LSB. For slave 1, it is a don't care, while for slave 2 it is 1. Thus to communicate only with slave 1, the master must send an address with LSB = 0 (1010 0000). Similarly the bit 1 position is 0 for slave 1 and don't care for slave 2. Hence to communicate only with slave 2 the master has to transmit an address with bit 1 = 1 (1010 0011). If the master

wishes to communicate with both slaves simultaneously, then the address must have bit 0 = 1 and bit 1 = 0. The bit 3 position is don't care for both the slaves. This allows two different addresses to select both slaves (1010 0001 and 1010 0101).

The master can communicate with all the slaves simultaneously with the Broadcast Address. This address is formed from the logical ORing of the SADDR and SADEN SFRs. The zeros in the result are defined as don't cares In most cases the Broadcast Address is FFh. In the previous case, the Broadcast Address is (1111111X) for slave 1 and (11111111) for slave 2.

The SADDR and SADEN SFRs are located at address A9h and B9h respectively. On reset, these two SFRs are initialized to 00h. This results in Given Address and Broadcast Address being set as XXXX XXXX(i.e. all bits don't care). This effectively removes the multiprocessor communications feature, since any selectivity is disabled.

Timed Access Protection

The W77C32 has several new features, like the Watchdog timer, on-chip ROM size adjustment, wait state control signal and Power on/fail reset flag, which are crucial to proper operation of the system. If left unprotected, errant code may write to the Watchdog control bits resulting in incorrect operation and loss of control. In order to prevent this, the W77C32 has a protection scheme which controls the write access to critical bits. This protection scheme is done using a timed access.

In this method, the bits which are to be protected have a timed write enable window. A write is successful only if this window is active, otherwise the write will be discarded. This write enable window is open for 3 machine cycles if certain conditions are met. After 3 machine cycles, this window automatically closes. The window is opened by writing AAh and immediately 55h to the Timed Access(TA) SFR. This SFR is located at address C7h. The suggested code for opening the timed access window is

```
TA      REG     0C7h            ;define new register TA, located at 0C7h
MOV     TA, #0AAh
MOV     TA, #055h
```

When the software writes AAh to the TA SFR, a counter is started. This counter waits for 3 machine cycles looking for a write of 55h to TA. If the second write (55h) occurs within 3 machine cycles of the first write (AAh), then the timed access window is opened. It remains open for 3 machine cycles, during which the user may write to the protected bits. Once the window closes the procedure must be repeated to access the other protected bits.

Examples of Timed Assessing are shown below.

Example 1: Valid access

```
MOV     TA, #0AAh       3 M/C       Note: M/C = Machine Cycles
MOV     TA, #055h       3 M/C
MOV     WDCON, #00h     3 M/C
```

Example 2: Valid access

```
MOV     TA, #0AAh       3 M/C
MOV     TA, #055h       3 M/C
NOP                     1 M/C
SETB    EWT             2 M/C
```

Example 3: Invalid access

```
MOV   TA, #0AAh    3 M/C
MOV   TA, #055h    3 M/C
NOP                1 M/C
NOP                1 M/C
CLR   POR          2 M/C
```

Example 4: Invalid Access

```
MOV   TA, #0AAh    3 M/C
NOP                1 M/C
MOV   TA, #055h    3 M/C
SETB  EWT          2 M/C
```

In the first two examples, the writing to the protected bits is done before the 3 machine cycle window closes. In Example 3, however, the writing to the protected bit occurs after the window has closed, and so there is effectively no change in the status of the protected bit. In Example 4, the second write to TA occurs 4 machine cycles after the first write, therefore the timed access window in not opened at all, and the write to the protected bit fails.

ABSOLUTE MAXIMUM RATINGS

PARAMETER	SYMBOL	CONDITION	RATING	UNIT
DC Power Supply	V_{DD}-V_{SS}	-0.3	+7.0	V
Input Voltage	V_{IN}	V_{SS} -0.3	V_{DD} +0.3	V
Operating Temperature	T_A	0	+70	°C
Storage Temperatute	Tst	-55	+150	°C

Note: Exposure to conditions beyond those listed under Absolute Maximum Ratings may adversely affect the life and reliability of the device.

DC CHARACTERISTICS

(V_{DD}–V_{SS} = 5V ±10%, T_A = 25°C, Fosc = 20 MHz, unless otherwise specified.)

PARAMETER	SYMBOL	SPECIFICATION			TEST CONDITIONS
		MIN.	MAX.	UNIT	
Operating Voltage	V_{DD}	4.5	5.5	V	
Operating Current	I_{DD}	-	50	mA	No load V_{DD} = RST = 5.5V

DC Characteristics, continued

PARAMETER	SYM.	SPECIFICATION			TEST CONDITIONS
		MIN.	MAX.	UNIT	
Idle Current	I_{IDLE}	-	20	mA	Idle mode V_{DD} = 5.5V
Power Down Current	I_{PWDN}	-	50	µA	Power-down mode V_{DD} = 5.5V
Input Current P1, P2, P3	I_{IN1}	-50	+10	µA	V_{DD} = 5.5V V_{IN} = 0V or V_{DD}
Input Current RST[*1]	I_{IN2}	-10	+300	µA	V_{DD} = 5.5V 0 < V_{IN} < V_{DD}
Input Leakage Current P0, $\overline{EA}$	I_{LK}	-10	+10	µA	V_{DD} = 5.5V 0V < V_{IN} < V_{DD}
Logic 1 to 0 Transition Current P1, P2, P3	I_{TL}[*4]	-500	-200	µA	V_{DD} = 5.5V V_{IN} = 2.0V
Input Low Voltage P0, P1, P2, P3, $\overline{EA}$	V_{IL1}	0	0.8	V	V_{DD} = 4.5V
Input Low Voltage RST[*1]	V_{IL2}	0	0.8	V	V_{DD} = 4.5V
Input Low Voltage XTAL1[*3]	V_{IL3}	0	0.8	V	V_{DD} = 4.5V
Input High Voltage P0, P1, P2, P3, $\overline{EA}$	V_{IH1}	2.4	V_{DD} +0.2	V	V_{DD} = 5.5V
Input High Voltage RST	V_{IH2}	3.5	V_{DD} +0.2	V	V_{DD} = 5.5V
Input High Voltage XTAL1[*3]	V_{IH3}	3.5	V_{DD} +0.2	V	V_{DD} = 5.5V
Output Low Voltage P1, P2, P3	V_{OL1}	-	0.45	V	V_{DD} = 4.5V I_{OL} = +2 mA
Output Low Voltage P0, ALE, $\overline{PSEN}$ [*2]	V_{OL2}	-	0.45	V	V_{DD} = 4.5V I_{OL} = +4 mA
Output High Voltage P1, P2, P3	V_{OH1}	2.4	-	V	V_{DD} = 4.5V I_{OH} = -100 µA
Output High Voltage P0, ALE, $\overline{PSEN}$ [*2]	V_{OH2}	2.4	-	V	V_{DD} = 4.5V I_{OH} = -400 µA

Notes:

*1. RST pin is a Schmitt trigger input.

*2. P0, ALE and $\overline{PSEN}$ are tested in the external access mode.

*3. XTAL1 is a CMOS input.

*4. Pins of P1, P2, P3, P4 can source a transition current when they are being externally driven from 1 to 0. The transition current reaches its maximum value when VIN approximates to 2V.

AC CHARACTERISTICS

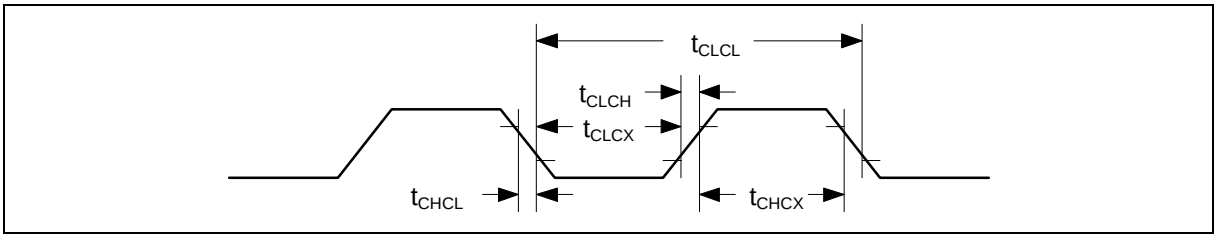

External Clock Characteristics

PARAMETER	SYMBOL	MIN.	TYP.	MAX.	UNITS	NOTES
Clock High Time	t_{CHCX}	12.5	-	-	nS	
Clock Low Time	t_{CLCX}	12.5	-	-	nS	
Clock Rise Time	t_{CLCH}	-	-	10	nS	
Clock Fall Time	t_{CHCL}	-	-	10	nS	

Note: Duty cycle is 50 %.

AC Specification

PARAMETER	SYM.	VARIABLE CLOCK MIN.	VARIABLE CLOCK MAX.	UNITS
Oscillator Frequency	$1/t_{CLCL}$	0	40	MHz
ALE Pulse Width	t_{LHLL}	1.5 t_{CLCL} - 5		nS
Address Valid to ALE Low	t_{AVLL}	0.5 t_{CLCL} - 5		nS
Address Hold After ALE Low	t_{LLAX1}	0.5 t_{CLCL} - 5		nS
Address Hold After ALE Low for MOVX Write	t_{LLAX2}	0.5 t_{CLCL} - 5		nS
ALE Low to Valid Instruction In	t_{LLIV}		2.5 t_{CLCL} - 20	nS
ALE Low to PSEN Low	t_{LLPL}	0.5 t_{CLCL} - 5		nS
$\overline{\text{PSEN}}$ Pulse Width	t_{PLPH}	2.0 t_{CLCL} - 5		nS
$\overline{\text{PSEN}}$ Low to Valid Instruction In	t_{PLIV}		2.0 t_{CLCL} - 20	nS
Input Instruction Hold After PSEN	t_{PXIX}	0		nS
Input Instruction Float After PSEN	t_{PXIZ}		t_{CLCL} - 5	nS
Port 0 Address to Valid Instr. In	t_{AVIV1}		3.0 t_{CLCL} - 20	nS
Port 2 Address to Valid Instr. In	t_{AVIV2}		3.5 t_{CLCL} - 20	nS
$\overline{\text{PSEN}}$ Low to Address Float	t_{PLAZ}	0		nS
Data Hold After Read	t_{RHDX}	0		nS
Data Float After Read	t_{RHDZ}		t_{CLCL} - 5	nS
$\overline{\text{RD}}$ Low to Address Float	t_{RLAZ}		0.5 t_{CLCL} - 5	nS

MOVX Characteristics Using Strech Memory Cycles

PARAMETER	SYM.	VARIABLE CLOCK MIN.	VARIABLE CLOCK MAX.	UNITS	STRECH
Data Access ALE Pulse Width	t_{LLHL2}	1.5 t_{CLCL} - 5 2.0 t_{CLCL} - 5		nS	t_{MCS} = 0 t_{MCS} > 0
Address Hold After ALE Low for MOVX Write	t_{LLAX2}	0.5 t_{CLCL} - 5		nS	
$\overline{RD}$ Pulse Width	t_{RLRH}	2.0 t_{CLCL} - 5 t_{MCS} - 10		nS	t_{MCS} = 0 t_{MCS} > 0
$\overline{WR}$ Pulse Width	t_{WLWH}	2.0 t_{CLCL} - 5 t_{MCS} - 10		nS	t_{MCS} = 0 t_{MCS} > 0
$\overline{RD}$ Low to Valid Data In	t_{RLDV}		2.0 t_{CLCL} - 20 t_{MCS} - 20	nS	t_{MCS} = 0 t_{MCS} > 0
Data Hold after Read	t_{RHDX}	0		nS	
Data Float after Read	t_{RHDZ}		t_{CLCL} - 5 2.0 t_{CLCL} - 5	nS	t_{MCS} = 0 t_{MCS} > 0
ALE Low to Valid Data In	t_{LLDV}		2.5 t_{CLCL} - 5 t_{MCS} + 2t_{CLCL} - 40	nS	t_{MCS} = 0 t_{MCS} > 0
Port 0 Address to Valid Data In	t_{AVDV1}		3.0 t_{CLCL} - 20 2.0t_{CLCL} - 5	nS	t_{MCS} = 0 t_{MCS} > 0
Port 2 Address to Valid Data In	t_{AVDV2}		3.5 t_{CLCL} - 20 2.5 t_{CLCL} - 5	nS	t_{MCS} = 0 t_{MCS} > 0
ALE Low to $\overline{RD}$ or $\overline{WR}$ Low	t_{LLWL}	0.5 t_{CLCL} - 5 1.5 t_{CLCL} - 5	0.5 t_{CLCL} + 5 1.5 t_{CLCL} + 5	nS	t_{MCS} = 0 t_{MCS} > 0
Port 0 Address to $\overline{RD}$ or $\overline{WR}$ Low	t_{AVWL}	t_{CLCL} - 5 2.0 t_{CLCL} - 5		nS	t_{MCS} = 0 t_{MCS} > 0
Port 2 Address to $\overline{RD}$ or $\overline{WR}$ Low	t_{AVWL2}	1.5 t_{CLCL} - 5 2.5 t_{CLCL} - 5		nS	t_{MCS} = 0 t_{MCS} > 0
Data Valid to $\overline{WR}$ Transition	t_{QVWX}	-5 1.0 t_{CLCL} - 5		nS	t_{MCS} = 0 t_{MCS} > 0
Data Hold after Write	t_{WHQX}	t_{CLCL} - 5 2.0 t_{CLCL} - 5		nS	t_{MCS} = 0 t_{MCS} > 0
$\overline{RD}$ Low to Address Float	t_{RLAZ}		0.5 t_{CLCL} - 5	nS	
$\overline{RD}$ or $\overline{WR}$ High to ALE High	t_{WHLH}	0 1.0 t_{CLCL} - 5	10 1.0 t_{CLCL} + 5	nS	t_{MCS} = 0 t_{MCS} > 0

Note: t_{MCS} is a time period related to the Stretch memory cycle selection. The following table shows the time period of t_{MCS} for each selection of the Stretch value.

M2	M1	M0	MOVX Cycles	t_{MCS}
0	0	0	2 machine cycles	0
0	0	1	3 machine cycles	4 t_{CLCL}
0	1	0	4 machine cycles	8 t_{CLCL}
0	1	1	5 machine cycles	12 t_{CLCL}
1	0	0	6 machine cycles	16 t_{CLCL}
1	0	1	7 machine cycles	20 t_{CLCL}
1	1	0	8 machine cycles	24 t_{CLCL}
1	1	1	9 machine cycles	28 t_{CLCL}

Explanation of Logic Symbols

In order to maintain compatibility with the original 8051 family, this device specifies the same parameter for each device, using the same symbols. The explanation of the symbols is as follows.

t	Time	A	Address
C	Clock	D	Input Data
H	Logic level high	L	Logic level low
I	Instruction	P	$\overline{PSEN}$
Q	Output Data	R	$\overline{RD}$ signal
V	Valid	W	$\overline{WR}$ signal
X	No longer a valid state	Z	Tri-state

TIMING WAVEFORMS

Program Memory Read Cycle

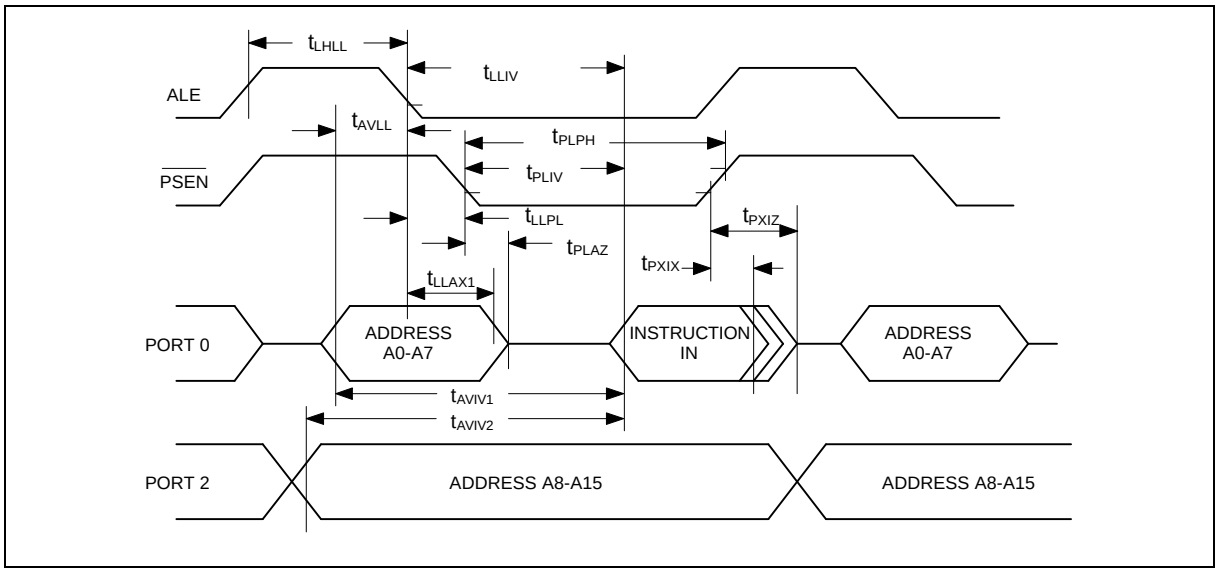

Timing Waveforms, continued

Data Memory Read Cycle

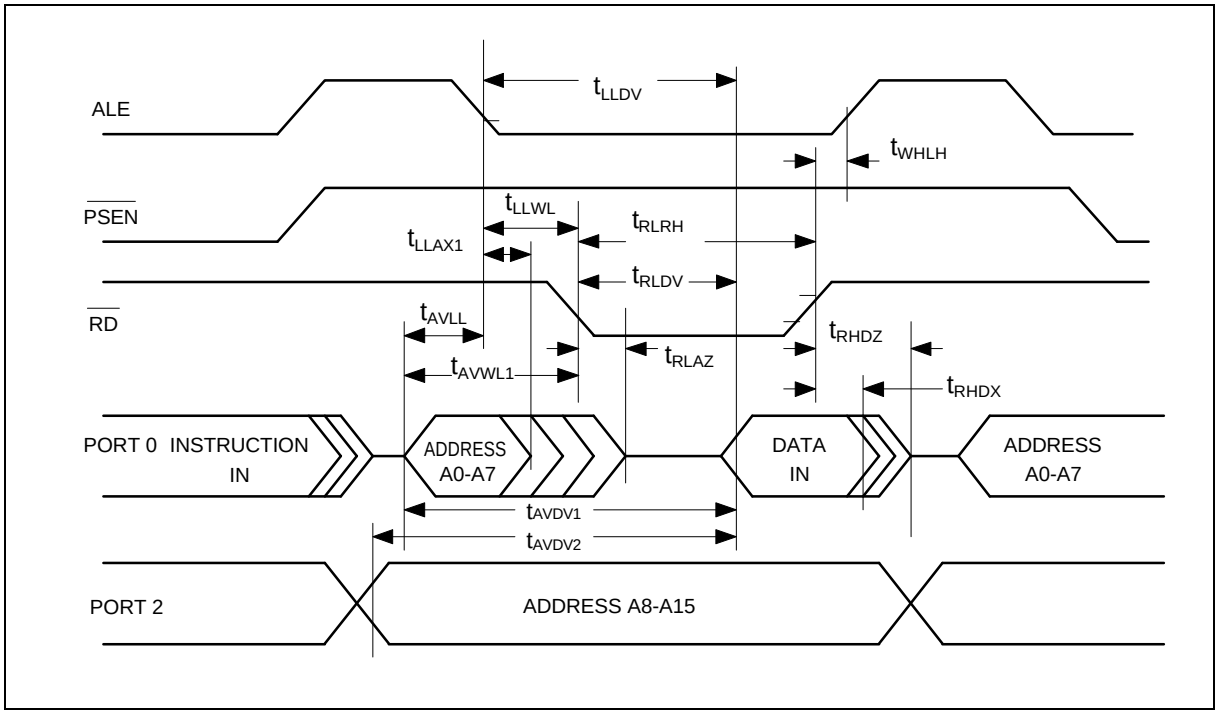

Data Memory Write Cycle

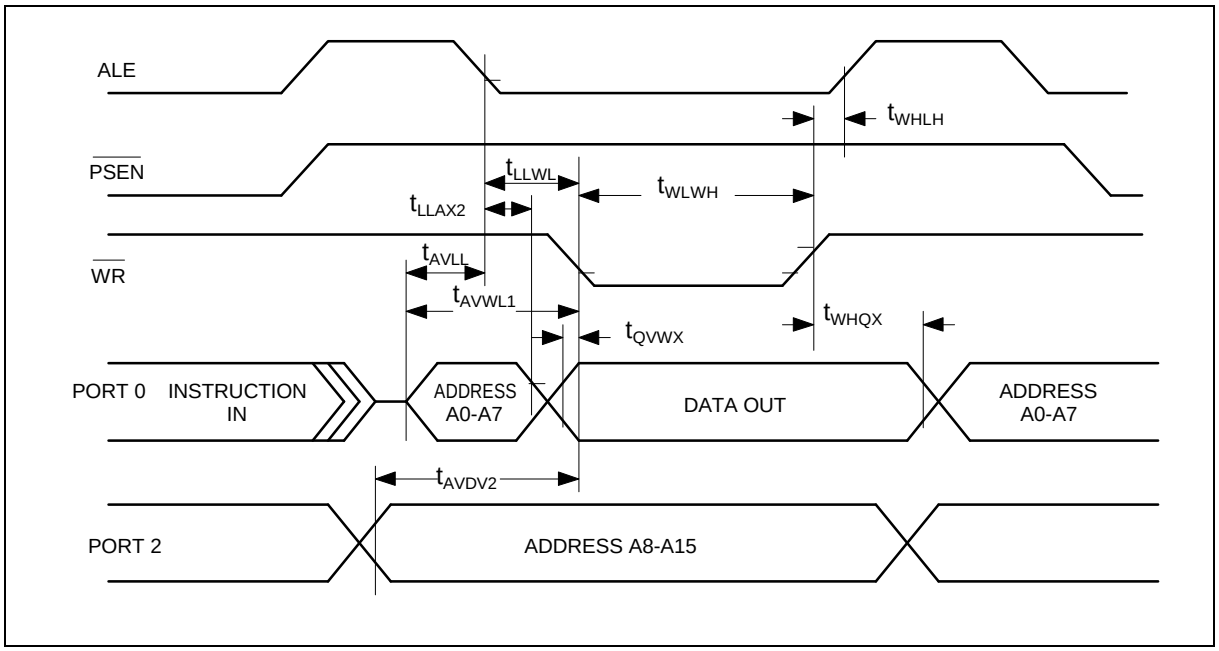

TYPICAL APPLICATION CIRCUITS

Expanded External Program Memory and Crystal

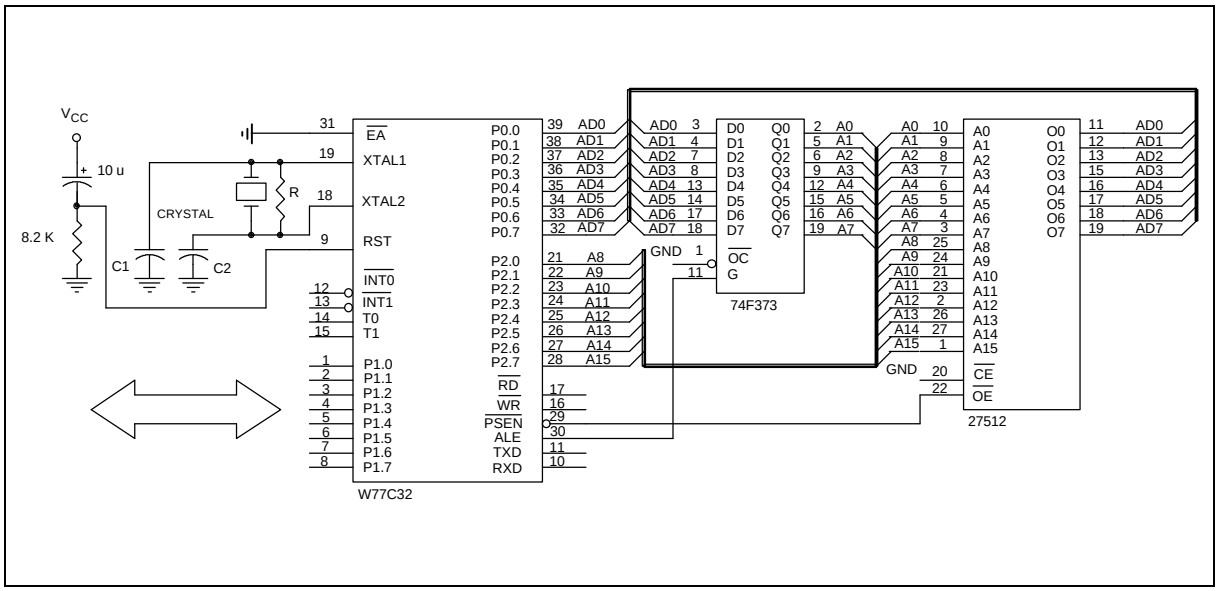

Figure A

CRYSTAL	C1	C2	R
16 MHz	30P	30P	-
24 MHz	15P	15P	-
33 MHz	10P	10P	6.8K
40 MHz	1P	1P	2.4K

The above table shows the reference values for crystal applications.

Note: C1, C2, R components refer to Figure A.

Typical Application Circuits, continued

Expanded External Data Memory and Oscillator

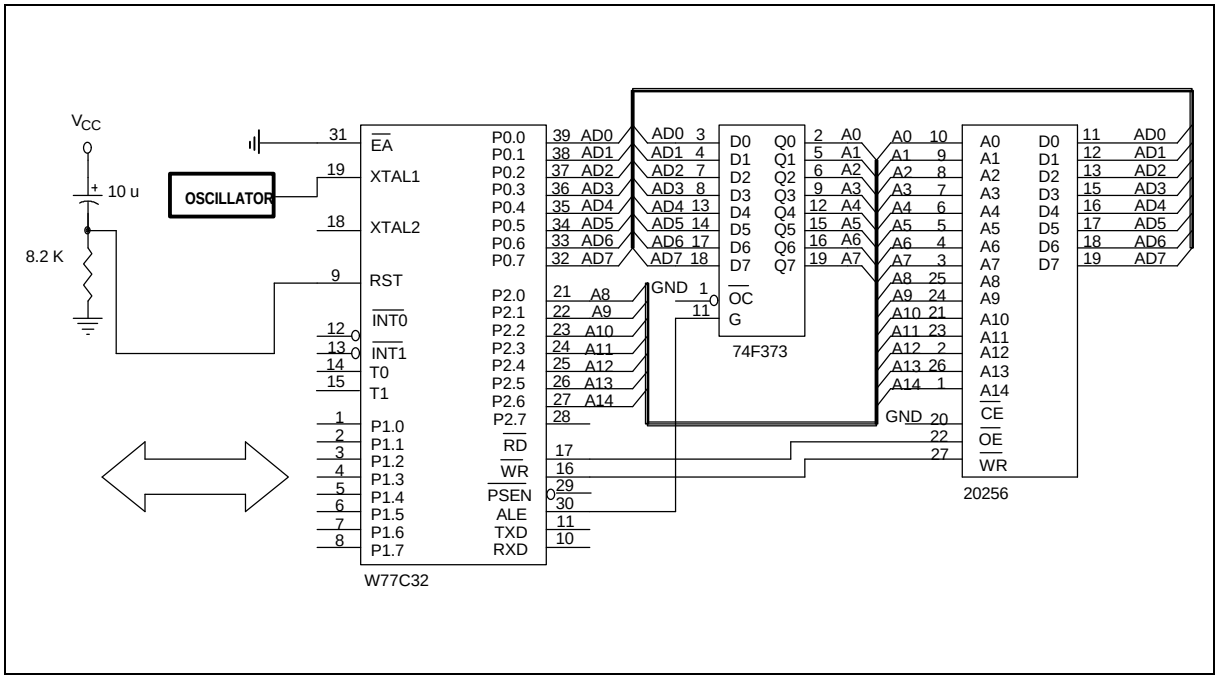

Figure B

PACKAGE DIMENSIONS

40-pin DIP

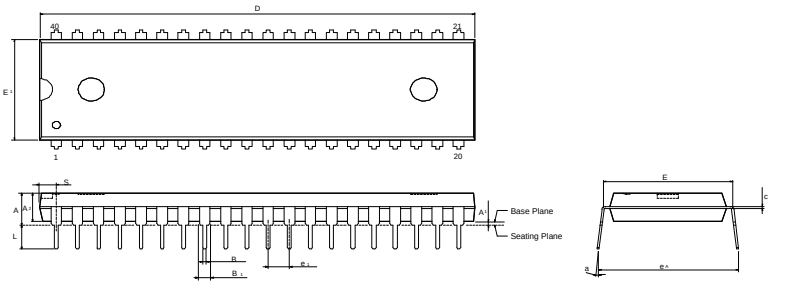

Symbol	Dimension in inches			Dimension in mm		
	Min.	Nom.	Max.	Min.	Nom.	Max.
A	—	—	0.210	—	—	5.334
A_1	0.010	—	—	0.254	—	—
A_2	0.150	0.155	0.160	3.81	3.937	4.064
B	0.016	0.018	0.022	0.406	0.457	0.559
B_1	0.048	0.050	0.054	1.219	1.27	1.372
c	0.008	0.010	0.014	0.203	0.254	0.356
D	—	2.055	2.070	—	52.20	52.58
E	0.590	0.600	0.610	14.986	15.24	15.494
E_1	0.540	0.545	0.550	13.72	13.84	13.97
e_1	0.090	0.100	0.110	2.286	2.54	2.794
L	0.120	0.130	0.140	3.048	3.302	3.556
a	0	—	15	0	—	15
e_A	0.630	0.650	0.670	16.00	16.51	17.01
S	—	—	0.090	—	—	2.286

Notes:
1. Dimension D Max. & S include mold flash or tie bar burrs.
2. Dimension E1 does not include interlead flash.
3. Dimension D & E1 include mold mismatch and are determined at the mold parting line.
4. Dimension B1 does not include dambar protrusion/intrusion.
5. Controlling dimension: Inches.
6. General appearance spec. should be based on final visual inspection spec.

Package Dimensions, continued

44-pin PLCC

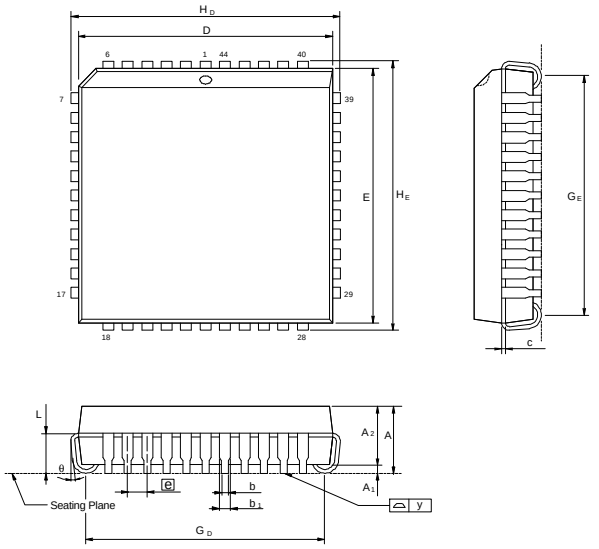

Symbol	Dimension in inches			Dimension in mm		
	Min.	Nom.	Max.	Min.	Nom.	Max.
A	—	—	0.185	—	—	4.699
A_1	0.020	—	—	0.508	—	—
A_2	0.145	0.150	0.155	3.683	3.81	3.937
b_1	0.026	0.028	0.032	0.66	0.711	0.813
b	0.016	0.018	0.022	0.406	0.457	0.559
c	0.008	0.010	0.014	0.203	0.254	0.356
D	0.648	0.653	0.658	16.46	16.59	16.71
E	0.648	0.653	0.658	16.46	16.59	16.71
e	0.050 BSC			1.27 BSC		
G_D	0.590	0.610	0.630	14.99	15.49	16.00
G_E	0.590	0.610	0.630	14.99	15.49	16.00
H_D	0.680	0.690	0.700	17.27	17.53	17.78
H_E	0.680	0.690	0.700	17.27	17.53	17.78
L	0.090	0.100	0.110	2.296	2.54	2.794
y	—	—	0.004	—	—	0.10

Notes:
1. Dimension D & E do not include interlead flash.
2. Dimension b1 does not include dambar protrusion/intrusion.
3. Controlling dimension: Inches
4. General appearance spec. should be based on final visual inspection spec.

44-pin QFP

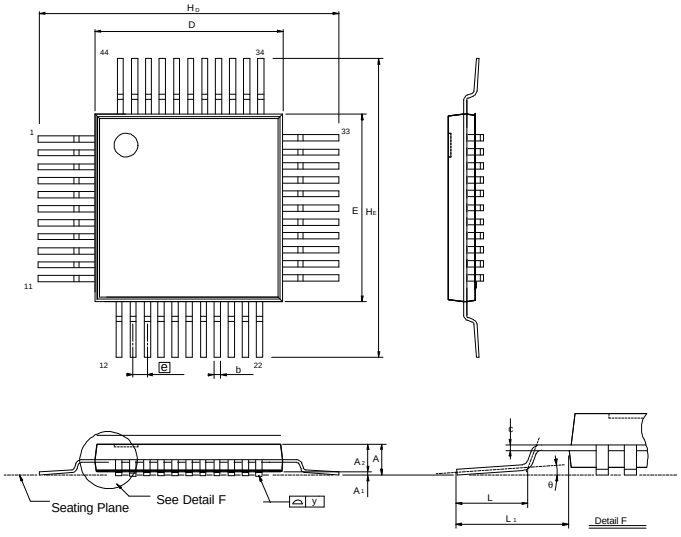

Symbol	Dimension in inch			Dimension in mm		
	Min.	Nom.	Max.	Min.	Nom.	Max.
A	---	---	---	---	---	---
A_1	0.002	0.01	0.02	0.05	0.25	0.5
A_2	0.075	0.081	0.087	1.90	2.05	2.20
b	0.01	0.014	0.018	0.25	0.35	0.45
c	0.004	0.006	0.010	0.101	0.152	0.254
D	0.390	0.394	0.398	9.9	10.00	10.1
E	0.390	0.394	0.398	9.9	10.00	10.1
e	0.025	0.031	0.036	0.635	0.80	0.952
H_D	0.510	0.520	0.530	12.95	13.2	13.45
H_E	0.510	0.520	0.530	12.95	13.2	13.45
L	0.025	0.031	0.037	0.65	0.8	0.95
L_1	0.051	0.063	0.075	1.295	1.6	1.905
y	—	—	0.003	—	—	0.08
θ	0°	—	7°	0°	—	7°

Notes:
1. Dimension D & E do not include interlead flash.
2. Dimension b does not include dambar protrusion/intrusion.
3. Controlling dimension: Millimeter
4. General appearance spec. should be based on final visual inspection spec.

Winbond Electronics Corp.

Headquarters
No. 4, Creation Rd. III,
Science-Based Industrial Park,
Hsinchu, Taiwan
TEL: 886-3-5770066
FAX: 886-3-5792766
http://www.winbond.com.tw/
Voice & Fax-on-demand: 886-2-27197006

Taipei Office
11F, No. 115, Sec. 3, Min-Sheng East Rd.,
Taipei, Taiwan
TEL: 886-2-27190505
FAX: 886-2-27197502

Winbond Electronics (H.K.) Ltd.
Rm. 803, World Trade Square, Tower II,
123 Hoi Bun Rd., Kwun Tong,
Kowloon, Hong Kong
TEL: 852-27513100
FAX: 852-27552064

Winbond Electronics North America Corp.
Winbond Memory Lab.
Winbond Microelectronics Corp.
Winbond Systems Lab.
2727 N. First Street, San Jose,
CA 95134, U.S.A.
TEL: 408-9436666
FAX: 408-5441798

Note: All data and specifications are subject to change without notice.