STP5NK100Z - STF5NK100Z
STW5NK100Z

N-channel 1000V - 2.7Ω - 3.5A - TO-220/TO-220FP/TO-247
Zener-protected SuperMESH™ Power MOSFET

General features

Type	V_{DSS} (@Tjmax)	$R_{DS(on)}$	I_D
STF5NK100Z	1000 V	< 3.7 Ω	3.5 A
STP5NK100Z	1000 V	< 3.7 Ω	3.5 A
STW5NK100Z	1000 V	< 3.7 Ω	3.5 A

- Extremely high dv/dt capability
- 100% avalanche tested
- Gate charge minimized
- Very low intrinsic capacitances
- Very good manufacturing repeatibility

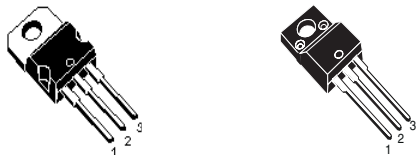

TO-220 TO-220FP

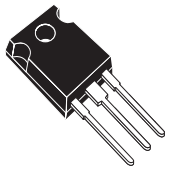

TO-247

Description

The SuperMESH™ series is obtained through an extreme optimization of ST's well established stripbased PowerMESH™ layout. In addition to pushing on-resistance significantly down, special care is taken to ensure a very good dv/dt capability for the most demanding applications. Such series complements ST full range of high voltage MOSFETs including revolutionary MDmesh™ products.

Internal schematic diagram

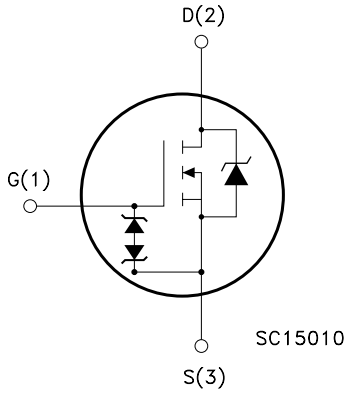

Applications

- Switching application

Order codes

Part number	Marking	Package	Packaging
STF5NK100Z	F5NK100Z	TO-220FP	Tube
STP5NK100Z	P5NK100Z	TO-220	Tube
STW5NK100Z	W5NK100Z	TO-247	Tube

Contents

1 Electrical ratings 3
1.1 Protection features of gate-to-source zener diodes 4
2 Electrical characteristics 5
2.1 Electrical characteristics (curves) 7
3 Test circuit 10
4 Package mechanical data 11
5 Revision history 15

1 Electrical ratings

Table 1. Absolute maximum ratings

Symbol	Parameter	Value		Unit
		TO-220/TO-247	TO-220FP	
V_{DS}	Drain-source voltage (V_{GS} = 0)	1000		V
V_{GS}	Gate-source voltage	± 30		V
I_D	Drain current (continuous) at T_C = 25°C	3.5	3.5 (1)	A
I_D	Drain current (continuous) at T_C=100°C	2.2	2.2 (1)	A
I_{DM}(2)	Drain current (pulsed)	14	14 (1)	A
P_{TOT}	Total dissipation at T_C = 25°C	125	30	W
	Derating factor	1	0.24	W/°C
$V_{ESD(G-S)}$	Gate source ESD (HBM-C=100pF, R=1.5KΩ)	4000		V
dv/dt (3)	Peak diode recovery voltage slope	4.5		V/ns
V_{ISO}	Insulation withstand voltage (RMS) from all three leads to external heat sink (t=1s; Tc= 25°C)	-	2500	V
T_J T_{stg}	Operating junction temperature Storage temperature	-55 to 150		°C

1. Limited only by maximum temperature allowed
2. Pulse width limited by safe operating area
3. I_{SD} ≤3.5A, di/dt ≤200A/µs, V_{DD} ≤$V_{(BR)DSS}$, T_j ≤$T_{JMAX.}$

Table 2. Thermal data

Symbol	Parameter	Value		Unit
		TO-220 TO-247	TO-220FP	
$R_{thj\text{-}case}$	Thermal resistance junction-case max	1	4.2	°C/W
$R_{thj\text{-}a}$	Thermal resistance junction-ambient max	62.5		°C/W
T_l	Maximum lead temperature for soldering purpose	300		°C

Table 3. Avalanche characteristics

Symbol	Parameter	Value	Unit
I_{AR}	Avalanche current, repetitive or not-repetitive (pulse width limited by Tj Max)	3.5	A
E_{AS}	Single pulse avalanche energy (starting Tj=25°C, Id=Iar, Vdd=50V)	250	mJ

Table 4. Gate-source zener diode

Symbol	Parameter	Test conditions	Min.	Typ.	Max.	Unit
BV_{GSO}	Gate-source breakdown voltage	Igs=± 1mA (open drain)	30			V

1.1 Protection features of gate-to-source zener diodes

The built-in back-to-back Zener diodes have specifically been designed to enhance not only the device's ESD capability, but also to make them safely absorb possible voltage transients that may occasionally be applied from gate to source. In this respect the Zener voltage is appropriate to achieve an efficient and cost-effective intervention to protect the device's integrity. These integrated Zener diodes thus avoid the usage of external components.

2 Electrical characteristics

(T_{CASE}=25°C unless otherwise specified)

Table 5. On/off states

Symbol	Parameter	Test conditions	Min.	Typ.	Max.	Unit
$V_{(BR)DSS}$	Drain-source breakdown voltage	I_D = 1mA, V_{GS}= 0	1000			V
I_{DSS}	Zero gate voltage drain current (V_{GS} = 0)	V_{DS} = Max rating, V_{DS} = Max rating, Tc = 125°C			1 50	µA µA
I_{GSS}	Gate body leakage current (V_{GS} = 0)	V_{GS} = ± 20V			±10	µA
$V_{GS(th)}$	Gate threshold voltage	V_{DS} = V_{GS}, I_D = 100µA	3	3.75	4.5	V
$R_{DS(on)}$	Static drain-source on resistance	V_{GS} = 10V, I_D = 1.75 A		2.7	3.7	Ω

Table 6. Dynamic

Symbol	Parameter	Test conditions	Min.	Typ.	Max.	Unit
g_{fs} (1)	Forward transconductance	V_{DS} =15V, I_D = 1.75A		4		S
C_{iss} C_{oss} C_{rss}	Input capacitance Output capacitance Reverse transfer capacitance	V_{DS} =25V, f=1 MHz, V_{GS}=0		1154 106 21.3		pF pF pF
C_{osseq} (2).	Equivalent output capacitance	V_{GS}=0, V_{DS} =0V to 800V		46.8		pF
$t_{d(on)}$ t_r $t_{d(off)}$ t_f	Turn-on delay time Rise time Off-voltage rise time Fall time	V_{DD}=500 V, I_D= 1.75 A, R_G=4.7Ω, V_{GS}=10V (see *Figure 20*)		22.5 7.7 51.5 19		ns ns ns ns
Q_g Q_{gs} Q_{gd}	Total gate charge Gate-source charge Gate-drain charge	V_{DD}=800V, I_D = 3.5 A V_{GS} =10V (see *Figure 21*)		42 7.3 21.7	59	nC nC nC

1. Pulsed: pulse duration=300µs, duty cycle 1.5%
2. $C_{oss\ eq.}$ is defined as a constant equivalent capacitance giving the same charging time as C_{oss} when V_{DS} increases from 0 to 80% V_{DSS}

Table 7. Source drain diode

Symbol	Parameter	Test conditions	Min	Typ.	Max	Unit
I_{SD}	Source-drain current				3.5	A
I_{SDM}(1)	Source-drain current (pulsed)				14	A
V_{SD}(2)	Forward on voltage	I_{SD}= 3.5 A, V_{GS}=0			1.6	V
t_{rr} Q_{rr} I_{RRM}	Reverse recovery time Reverse recovery charge Reverse recovery current	I_{SD}= 3.5 A, di/dt = 100A/µs, V_{DD}=30 V (see *Figure 22*)		605 3.09 10.5		ns µC A
t_{rr} Q_{rr} I_{RRM}	Reverse recovery time Reverse recovery charge Reverse recovery current	I_{SD}= 3.5 A, di/dt = 100A/µs, V_{DD}=35 V, Tj=150°C (see *Figure 22*)		742 4.2 11.2		ns µC A

1. Pulse width limited by safe operating area
2. Pulsed: pulse duration=300µs, duty cycle 1.5%

2.1 Electrical characteristics (curves)

Figure 1. Safe operating area for TO-220FP

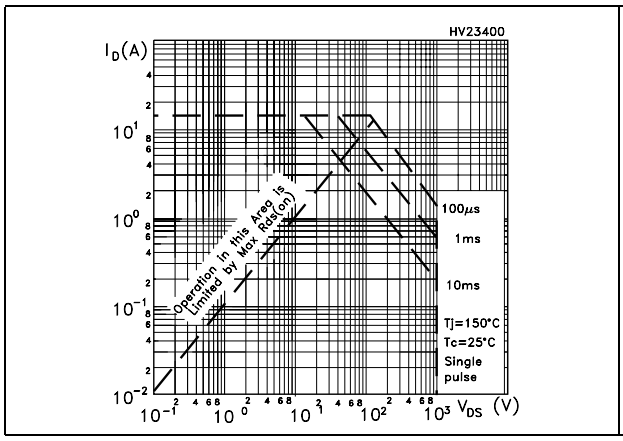

Figure 2. Thermal impedance for TO-220FP

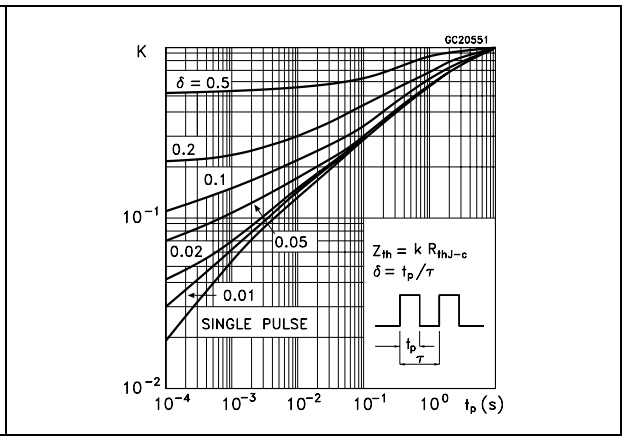

Figure 3. Safe operating area for TO-220

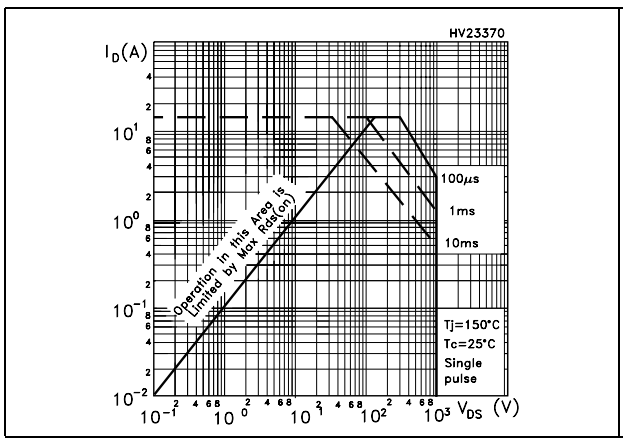

Figure 4. Thermal impedance for TO-220

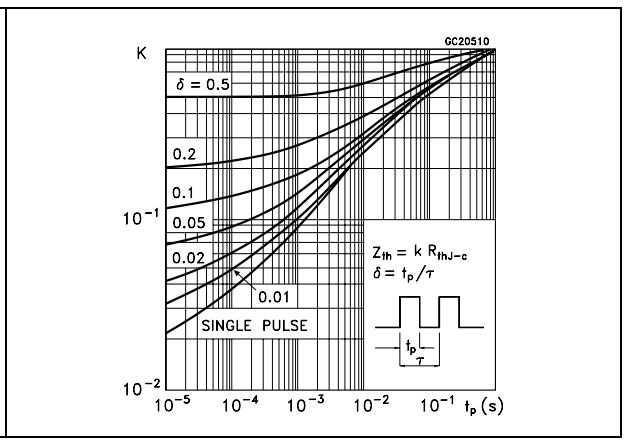

Figure 5. Safe operating area for TO-247

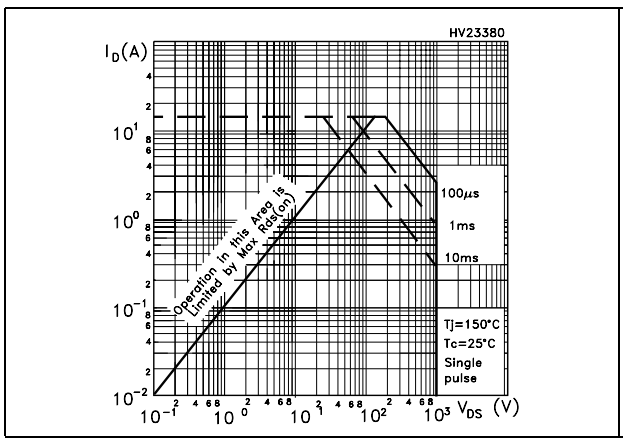

Figure 6. Thermal impedance for TO-247

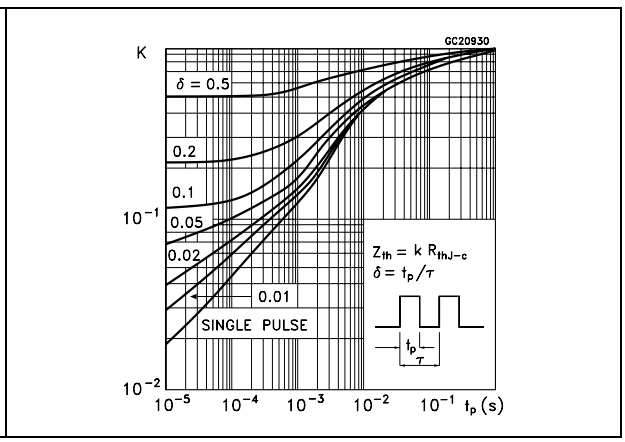

Figure 7. Output characterisics

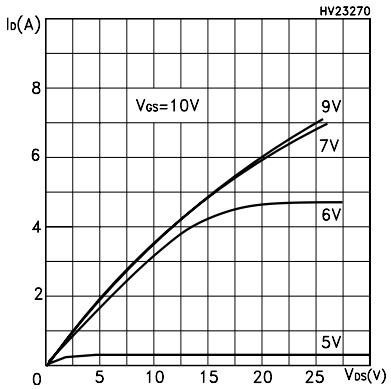

Figure 8. Transfer characteristics

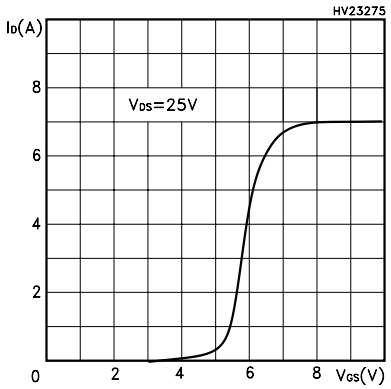

Figure 9. Transconductance

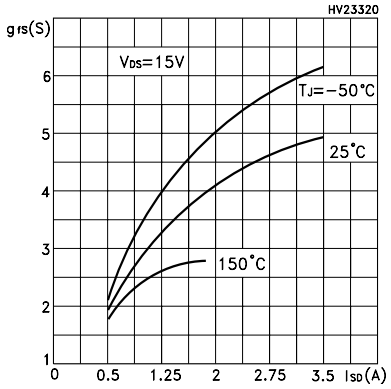

Figure 10. Static drain-source on resistance

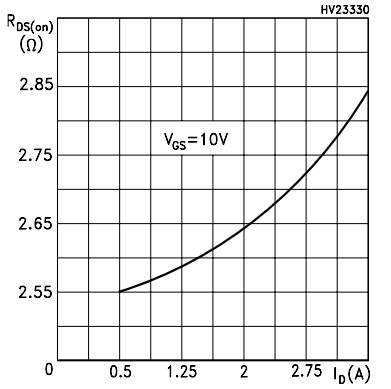

Figure 11. Gate charge vs gate-source voltage

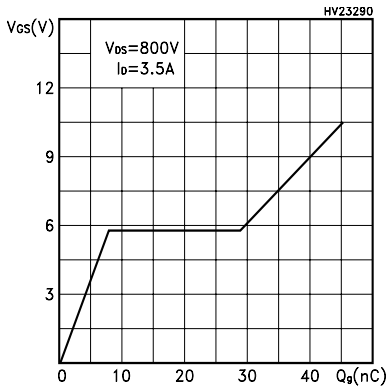

Figure 12. Capacitance variations

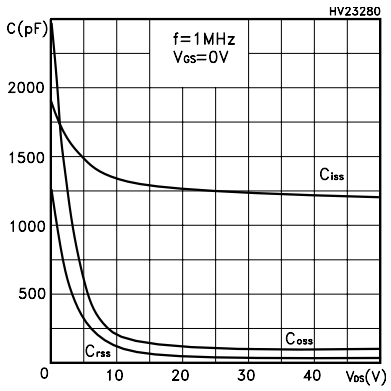

Figure 13. Normalized gate threshold voltage vs temperature

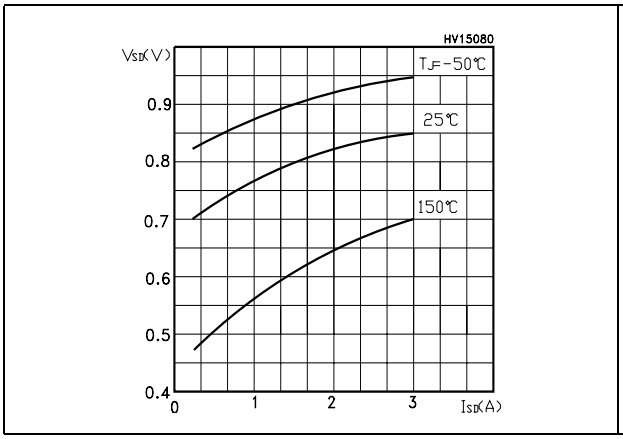

Figure 14. Normalized on resistance vs temperature

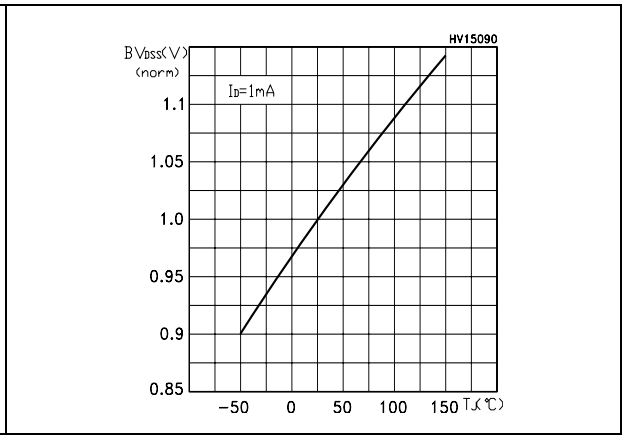

Figure 15. Source-drain diode forward characteristics

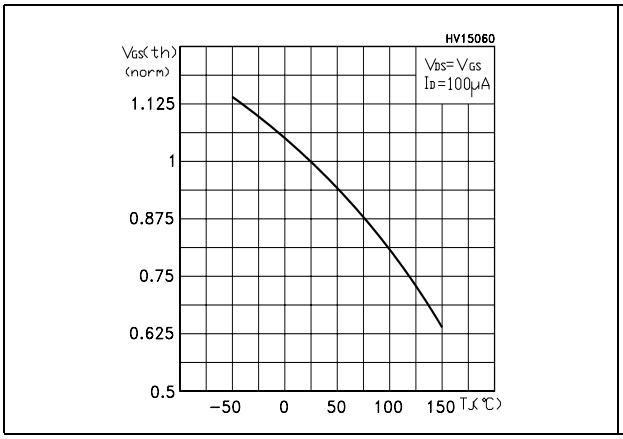

Figure 16. Normalized BVdss vs temperature

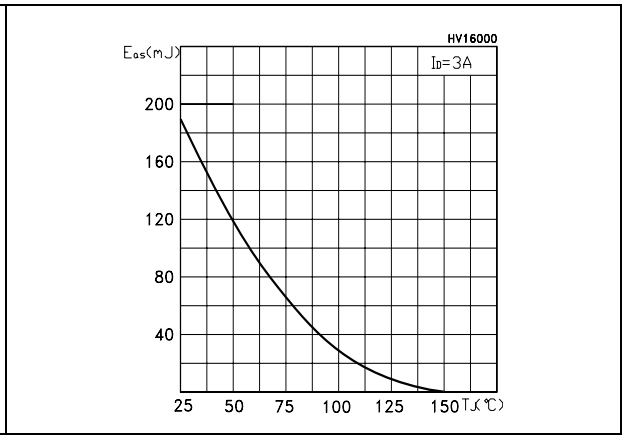

Figure 17. Maximum avalanche energy vs temperature

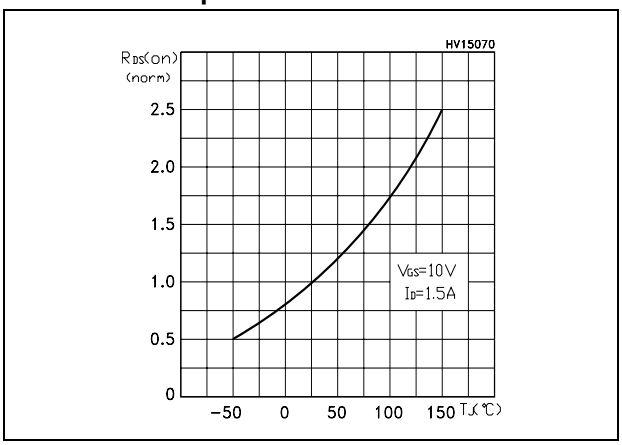

3 Test circuit

Figure 18. Unclamped Inductive load test circuit

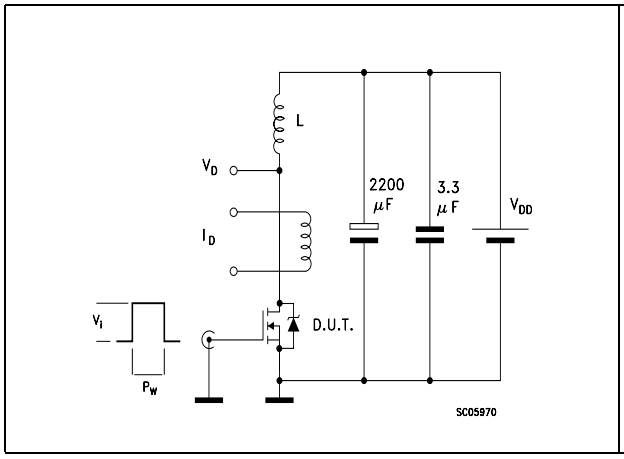

Figure 19. Unclamped Inductive waveform

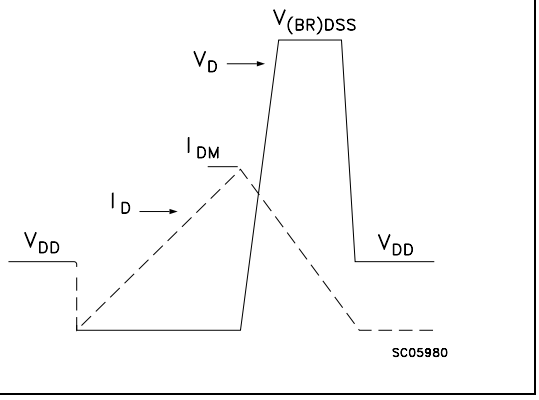

Figure 20. Switching times test circuit for resistive load

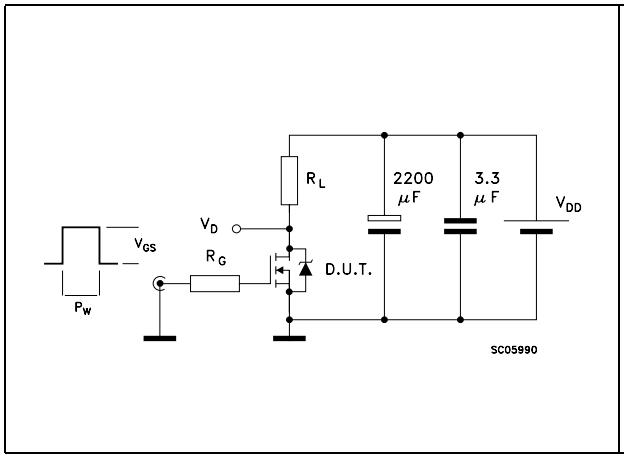

Figure 21. Gate charge test circuit

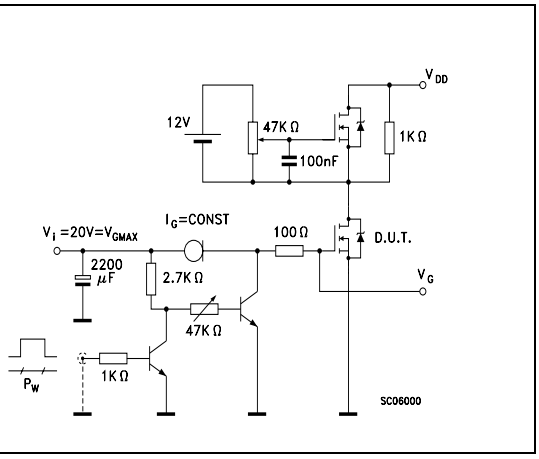

Figure 22. Test circuit for inductive load switching and diode recovery times

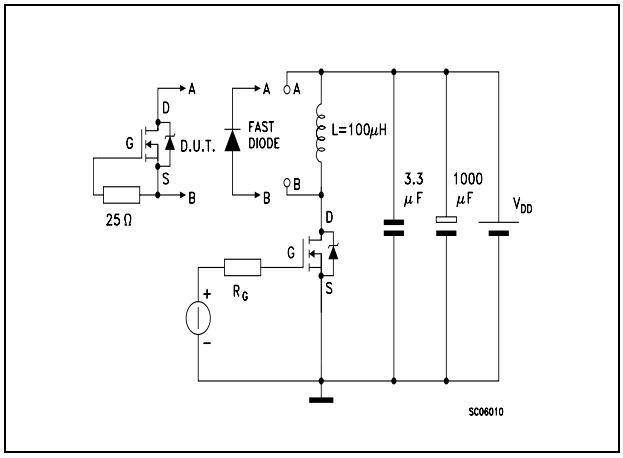

4 Package mechanical data

In order to meet environmental requirements, ST offers these devices in ECOPACK® packages. These packages have a Lead-free second level interconnect . The category of second level interconnect is marked on the package and on the inner box label, in compliance with JEDEC Standard JESD97. The maximum ratings related to soldering conditions are also marked on the inner box label. ECOPACK is an ST trademark. ECOPACK specifications are available at: www.st.com

TO-220FP MECHANICAL DATA

DIM.	mm.			inch		
	MIN.	TYP	MAX.	MIN.	TYP.	MAX.
A	4.4		4.6	0.173		0.181
B	2.5		2.7	0.098		0.106
D	2.5		2.75	0.098		0.108
E	0.45		0.7	0.017		0.027
F	0.75		1	0.030		0.039
F1	1.15		1.7	0.045		0.067
F2	1.15		1.7	0.045		0.067
G	4.95		5.2	0.195		0.204
G1	2.4		2.7	0.094		0.106
H	10		10.4	0.393		0.409
L2		16			0.630	
L3	28.6		30.6	1.126		1.204
L4	9.8		10.6	.0385		0.417
L5	2.9		3.6	0.114		0.141
L6	15.9		16.4	0.626		0.645
L7	9		9.3	0.354		0.366
Ø	3		3.2	0.118		0.126

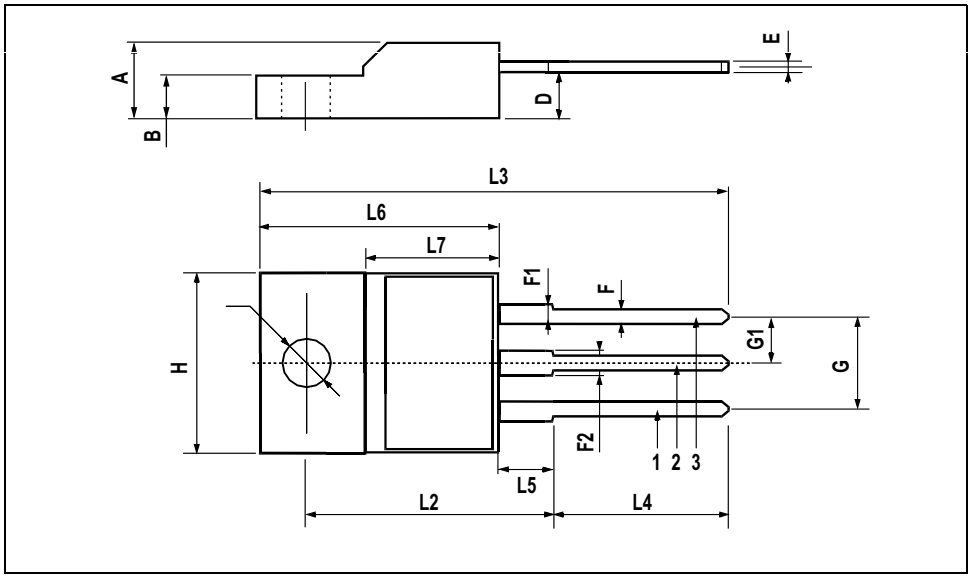

TO-220 MECHANICAL DATA

DIM.	mm.			inch		
	MIN.	TYP	MAX.	MIN.	TYP.	MAX.
A	4.40		4.60	0.173		0.181
b	0.61		0.88	0.024		0.034
b1	1.15		1.70	0.045		0.066
c	0.49		0.70	0.019		0.027
D	15.25		15.75	0.60		0.620
E	10		10.40	0.393		0.409
e	2.40		2.70	0.094		0.106
e1	4.95		5.15	0.194		0.202
F	1.23		1.32	0.048		0.052
H1	6.20		6.60	0.244		0.256
J1	2.40		2.72	0.094		0.107
L	13		14	0.511		0.551
L1	3.50		3.93	0.137		0.154
L20		16.40			0.645	
L30		28.90			1.137	
øP	3.75		3.85	0.147		0.151
Q	2.65		2.95	0.104		0.116

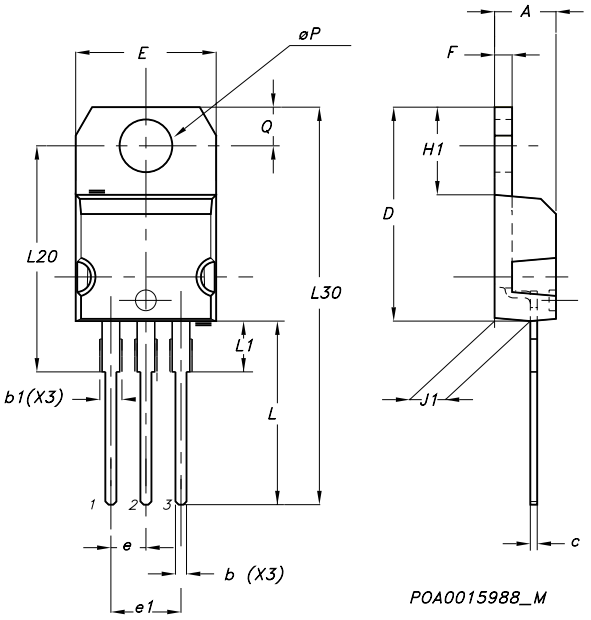

TO-247 MECHANICAL DATA

DIM.	mm.			inch		
	MIN.	TYP	MAX.	MIN.	TYP.	MAX.
A	4.85		5.15	0.19		0.20
A1	2.20		2.60	0.086		0.102
b	1.0		1.40	0.039		0.055
b1	2.0		2.40	0.079		0.094
b2	3.0		3.40	0.118		0.134
c	0.40		0.80	0.015		0.03
D	19.85		20.15	0.781		0.793
E	15.45		15.75	0.608		0.620
e		5.45			0.214	
L	14.20		14.80	0.560		0.582
L1	3.70		4.30	0.14		0.17
L2		18.50			0.728	
øP	3.55		3.65	0.140		0.143
øR	4.50		5.50	0.177		0.216
S		5.50			0.216	

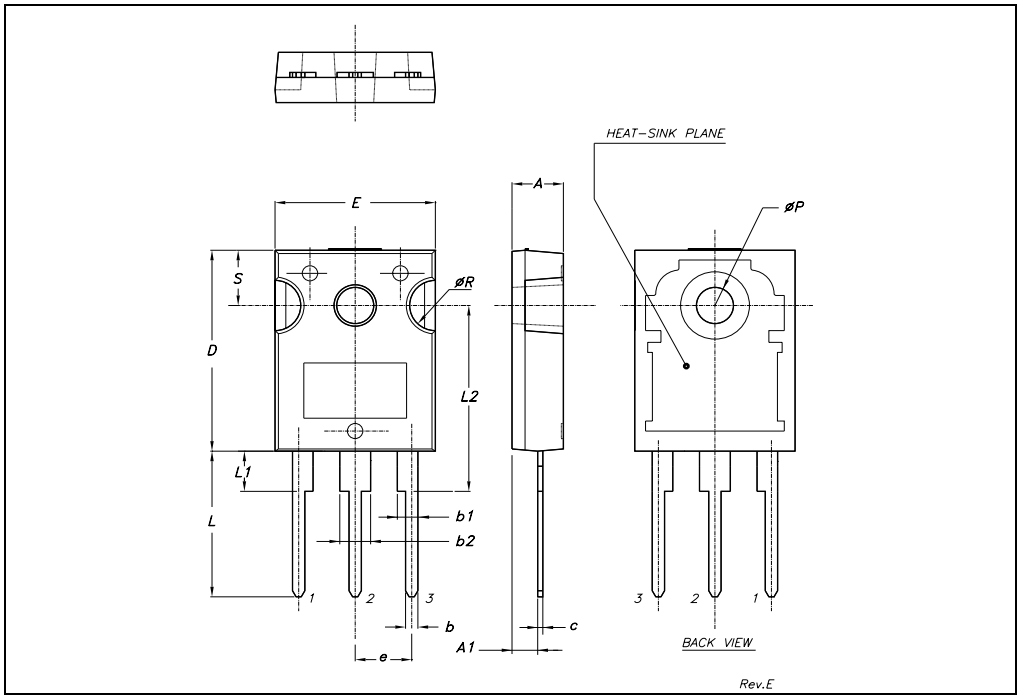

5 Revision history

Table 8. Revision history

Date	Revision	Changes
12-Oct-2004	1	First release
08-Sep-2005	2	Complete datasheet
16-Dec-2005	3	Inserted ecopack indication
16-Aug-2006	4	New template, no content change

Please Read Carefully:

Information in this document is provided solely in connection with ST products. STMicroelectronics NV and its subsidiaries (“ST”) reserve the right to make changes, corrections, modifications or improvements, to this document, and the products and services described herein at any time, without notice.

All ST products are sold pursuant to ST’s terms and conditions of sale.

Purchasers are solely responsible for the choice, selection and use of the ST products and services described herein, and ST assumes no liability whatsoever relating to the choice, selection or use of the ST products and services described herein.

No license, express or implied, by estoppel or otherwise, to any intellectual property rights is granted under this document. If any part of this document refers to any third party products or services it shall not be deemed a license grant by ST for the use of such third party products or services, or any intellectual property contained therein or considered as a warranty covering the use in any manner whatsoever of such third party products or services or any intellectual property contained therein.

UNLESS OTHERWISE SET FORTH IN ST’S TERMS AND CONDITIONS OF SALE ST DISCLAIMS ANY EXPRESS OR IMPLIED WARRANTY WITH RESPECT TO THE USE AND/OR SALE OF ST PRODUCTS INCLUDING WITHOUT LIMITATION IMPLIED WARRANTIES OF MERCHANTABILITY, FITNESS FOR A PARTICULAR PURPOSE (AND THEIR EQUIVALENTS UNDER THE LAWS OF ANY JURISDICTION), OR INFRINGEMENT OF ANY PATENT, COPYRIGHT OR OTHER INTELLECTUAL PROPERTY RIGHT.

UNLESS EXPRESSLY APPROVED IN WRITING BY AN AUTHORIZED ST REPRESENTATIVE, ST PRODUCTS ARE NOT RECOMMENDED, AUTHORIZED OR WARRANTED FOR USE IN MILITARY, AIR CRAFT, SPACE, LIFE SAVING, OR LIFE SUSTAINING APPLICATIONS, NOR IN PRODUCTS OR SYSTEMS WHERE FAILURE OR MALFUNCTION MAY RESULT IN PERSONAL INJURY, DEATH, OR SEVERE PROPERTY OR ENVIRONMENTAL DAMAGE. ST PRODUCTS WHICH ARE NOT SPECIFIED AS "AUTOMOTIVE GRADE" MAY ONLY BE USED IN AUTOMOTIVE APPLICATIONS AT USER’S OWN RISK.

Resale of ST products with provisions different from the statements and/or technical features set forth in this document shall immediately void any warranty granted by ST for the ST product or service described herein and shall not create or extend in any manner whatsoever, any liability of ST.

ST and the ST logo are trademarks or registered trademarks of ST in various countries.

Information in this document supersedes and replaces all information previously supplied.

The ST logo is a registered trademark of STMicroelectronics. All other names are the property of their respective owners.

© 2006 STMicroelectronics - All rights reserved

STMicroelectronics group of companies

Australia - Belgium - Brazil - Canada - China - Czech Republic - Finland - France - Germany - Hong Kong - India - Israel - Italy - Japan - Malaysia - Malta - Morocco - Singapore - Spain - Sweden - Switzerland - United Kingdom - United States of America

www.st.com