W162

Spread Aware™, Zero Delay Buffer

Features

- **Spread Aware™—designed to work with SSFTG reference signals**
- **Two banks of four outputs, plus the fed back output**
- **Outputs may be three-stated**
- **Available in 16-pin SOIC or SSOP package**
- **Extra strength output drive available (-19 version)**
- **Internal feedback**

Key Specifications

Operating Voltage: ..... 3.3V±10%

Operating Range: .....15 < f_{OUT} < 133 MHz

Cycle-to-Cycle Jitter: ..... 250 ps

Output to Output Skew: ..... 150 ps

Propagation Delay: ..... 150 ps

Table 1. Input Logic

SEL1	SEL0	QA0:3	QB0:3	PLL	QFB
0	0	Three-State	Three-State	Shutdown	Active
0	1	Active	Three-State	Active, Utilized	Active
1	0	Active	Active	Shutdown, Bypassed	Active
1	1	Active	Active	Active, Utilized	Active

Block Diagram

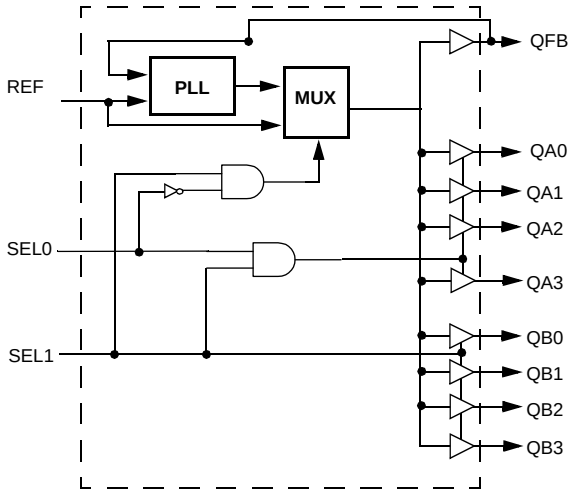

Pin Configuration

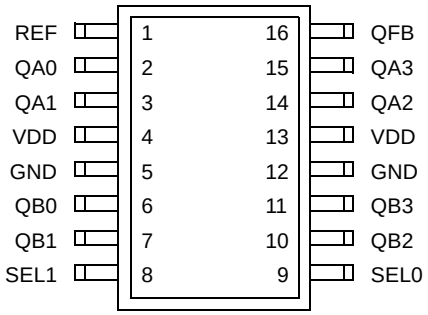

Spread Aware is a trademark of Cypress Semiconductor Corporation.

Pin Definitions

Pin Name	Pin No.	Pin Type	Pin Description
REF	1	I	***Reference Input:*** The output signals QA0:3 through QB0:3 will be synchronized to this signal unless the device is programmed to bypass the PLL.
QFB	16	O	***Feedback Output:*** This signal is used as the feedback internally to establish the propagation delay of nearly 0.
QA0:3	2, 3, 14, 15	O	***Outputs from Bank A:*** The frequency of the signals provided by these pins is equal to the signal connected to REF.
QB0:3	6, 7, 10, 11	O	***Outputs from Bank B:*** The frequency of the signals provided by these pins is equal to the signal connected to REF.
VDD	4, 13	P	***Power Connections:*** Connect to 3.3V. Use ferrite beads to help reduce noise for optimal jitter performance.
GND	5, 12	P	***Ground Connections:*** Connect all grounds to the common system ground plane.
SEL0:1	9, 8	I	***Function Select Inputs:*** Tie to V_{DD} (HIGH, 1) or GND (LOW, 0) as desired per *Table 1*.

Overview

The W162 products are nine-output zero delay buffers. A Phase-Locked Loop (PLL) is used to take a time-varying signal and provide eight copies of that same signal out.

Internal feedback is used to maximize the number of output signals provided in the 16-pin package.

Spread Aware

Many systems being designed now utilize a technology called Spread Spectrum Frequency Timing Generation. Cypress has been one of the pioneers of SSFTG development, and we designed this product so as not to filter off the Spread Spectrum feature of the Reference input, assuming it exists. When a zero delay buffer is not designed to pass the SS feature through, the result is a significant amount of tracking skew which may cause problems in systems requiring synchronization.

For more details on Spread Spectrum timing technology, please see the Cypress Application note titled, “EMI Suppression Techniques with Spread Spectrum Frequency Timing Generator (SSFTG) ICs.”

Functional Description

Logic inputs provide the user the ability to turn off one or both banks of clocks when not in use, as described in *Table 1*. Disabling a bank of unused outputs will reduce jitter and power consumption, and will also reduce the amount of EMI generated by the W162.

These same inputs allow the user to bypass the PLL entirely if so desired. When this is done, the device no longer acts as a zero delay buffer, it simply reverts to a standard nine-output clock driver.

Absolute Maximum Ratings[1]

Stresses greater than those listed in this table may cause permanent damage to the device. These represent a stress rating only. Operation of the device at these or any other conditions above those specified in the operating sections of this specification is not implied. Maximum conditions for extended periods may affect reliability

Parameter	Description	Rating	Unit
V_{DD}, V_{IN}	Voltage on any pin with respect to GND	–0.5 to +7.0	V
T_{STG}	Storage Temperature	–65 to +150	°C
T_A	Operating Temperature	0 to +70	°C
T_B	Ambient Temperature under Bias	–55 to +125	°C
P_D	Power Dissipation	0.5	W

DC Electrical Characteristics: T_A =0°C to 70°C, V_{DD} = 3.3V ±10%

Parameter	Description	Test Condition	Min	Typ	Max	Unit
I_{DD}	Supply Current	Unloaded, 100 MHz			40	mA
V_{IL}	Input Low Voltage				0.8	V
V_{IH}	Input High Voltage		2.0			V
V_{OL}	Output Low Voltage	I_{OL} = 12 mA (-19) I_{OL} = 8 mA (-9)			0.4	V
V_{OH}	Output High Voltage	I_{OL} = 12 mA (-19) I_{OL} = 8 mA (-9)	2.4			V
I_{IL}	Input Low Current	V_{IN} = 0V	–500			µA
I_{IH}	Input High Current	V_{IN} = V_{DD}			10	µA

AC Electrical Characteristics: T_A = 0°C to +70°C, V_{DD} = 3.3V ±10%

Parameter	Description	Test Condition	Min	Typ	Max	Unit
f_{IN}	Input Frequency		15		133	MHz
f_{OUT}	Output Frequency	15-pF load[6]	15		133	MHz
t_R	Output Rise Time (-09)[2]	2.0 to 0.8V, 15-pF load		2	2.5	ns
	Output Rise Time (-19)[2]	2.0 to 0.8V, 20-pF load			1.5	ns
t_F	Output Fall Time (-09)[2]	2.0 to 0.8V, 15-pF load		2	2.5	ns
	Output Rise Time (-19)[2]	2.0 to 0.8V, 20-pF load			1.5	ns
t_{PD}	FBIN to REF Skew[3, 4]	Measured at V_{DD}/2			150	ps
t_{SK}	Output to Output Skew	All outputs loaded equally			150	ps
t_D	Duty Cycle	15-pF load[5]	45	50	55	%
t_{LOCK}	PLL Lock Time	Power supply stable			1.0	ms
t_{JC}	Jitter, Cycle-to-Cycle				250	ps

Notes:
1. **Multiple Supplies:** The voltage on any input or I/O pin cannot exceed the power pin during power-up. Power supply sequencing is NOT required.
2. Long input rise and fall time will degrade skew and jitter performance.
3. All AC specifications are measured with a 50Ω transmission line, load terminated with 50Ω to 1.4V.
4. Skew is measured at V_{DD}/2 on rising edges.
5. Duty cycle is measured at V_{DD}/2
6. For the higher drive -19, the load is 20 pF.

Schematic

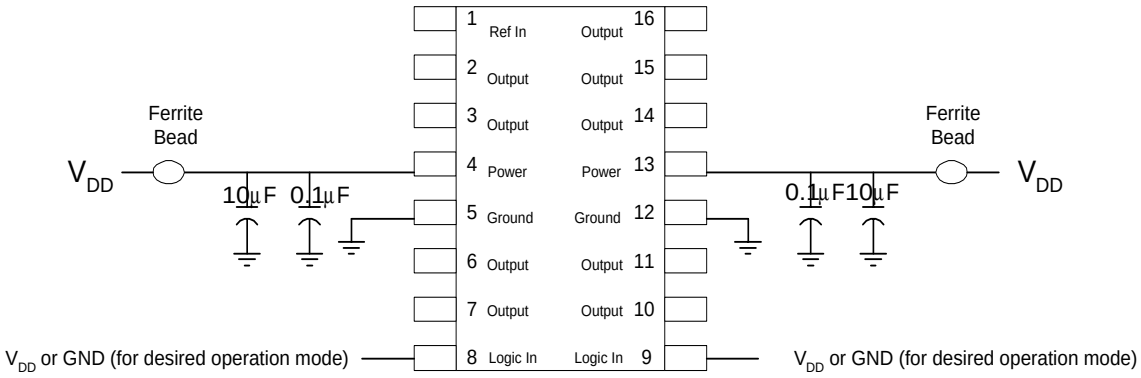

Ordering Information

Ordering Code	Option	Package Name	Package Type
W162	-09, -19	G H	16-pin Plastic SOIC (150-mil) 16-pin Plastic SSOP (150-mil)

Package Diagrams

16-pin SSOP Small Shrunk Outline Package (SSOP, 150-mil)

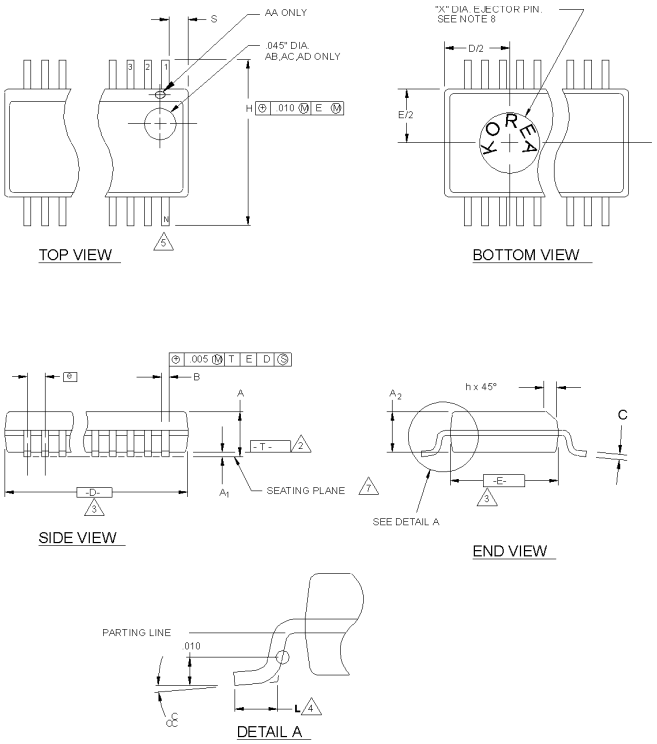

NOTES:

1. DIMENSIONING & TOLERANCES PER ANSI Y14.5M - 1982.
2. "T" IS A REFERENCE DATUM.
3. "D" & "E" ARE REFERENCE DATUMS AND DO NOT INCLUDE MOLD FLASH OR PROTRUSIONS, BUT DOES INCLUDE MOLD MISMATCH AND ARE MEASURED AT THE MOLD PARTING LINE. MOLD FLASH OR PROTRUSIONS SHALL NOT EXCEED .006 INCHES PER SIDE.
4. "L" IS THE LENGTH OF TERMINAL FOR SOLDERING TO A SUBSTRATE.
5. "N" IS THE NUMBER OF TERMINAL POSITIONS.
6. TERMINAL POSITIONS ARE SHOWN FOR REFERENCE ONLY.
7. FORMED LEADS SHALL BE PLANAR WITH RESPECT TO ONE ANOTHER WITHIN .003 INCHES AT SEATING PLANE.
8. COUNTRY OF ORIGIN LOCATION AND EJECTOR PIN ON PACKAGE BOTTOM IS OPTIONAL AND DEPENDS ON ASSEMBLY LOCATION.
9. CONTROLLING DIMENSION: INCHES.
10. MAXIMUM DIE THICKNESS ALLOWABLE WITHOUT DIE COAT IS .016.

THIS TABLE IN INCHES

SYMBOL	COMMON DIMENSIONS			NOTE	NOTE 3 VARIATIONS	D			S			5 N
	MIN.	NOM.	MAX.			MIN.	NOM.	MAX.	MIN.	NOM.	MAX.	
A	.061	.064	.068		AA	.189	.194	.196	.0020	.0045	.0070	16
A_1	.004	.006	.0098		AB	.337	.342	.344	.0500	.0525	.0550	20
A_2	.055	.058	.061		AC	.337	.342	.344	.0250	.0275	.0300	24
B	.008	.010	.012		AD	.386	.391	.393	.0250	.0280	.0300	28
C	.0075	.008	.0098									
D	SEE VARIATIONS			3								
E	.150	.155	.157									
e	.025 BSC											
H	.230	.236	.244									
h	.010	.013	.016									
L	.016	.025	.035									
N	SEE VARIATIONS			5								
S	SEE VARIATIONS											
α	0°	5°	8°									
X	.085	.093	.100									

THIS TABLE IN MILLIMETERS

SYMBOL	COMMON DIMENSIONS			NOTE	NOTE 3 VARIATIONS	D			S			5 N
	MIN.	NOM.	MAX.			MIN.	NOM.	MAX.	MIN.	NOM.	MAX.	
A	1.55	1.63	1.73		AA	4.80	4.93	4.98	0.05	0.11	0.18	16
A_1	0.127	0.15	0.25		AB	8.56	8.69	8.74	1.27	1.33	1.40	20
A_2	1.40	1.47	1.55		AC	8.56	8.69	8.74	0.64	0.70	0.76	24
B	0.20	0.25	0.31		AD	9.80	9.93	9.98	0.64	0.71	0.76	28
C	0.19	0.20	0.25									
D	SEE VARIATIONS			3								
E	3.81	3.94	3.99									
e	0.635 BSC											
H	5.84	5.99	6.20									
h	0.25	0.33	0.41									
L	0.41	0.64	0.89									
N	SEE VARIATIONS			5								
S	SEE VARIATIONS											
α	0°	5°	8°									
X	2.16	2.36	2.54									

Package Diagrams (continued)

16-Pin Small Outlined Integrated Circuit (SOIC, 150-mil)

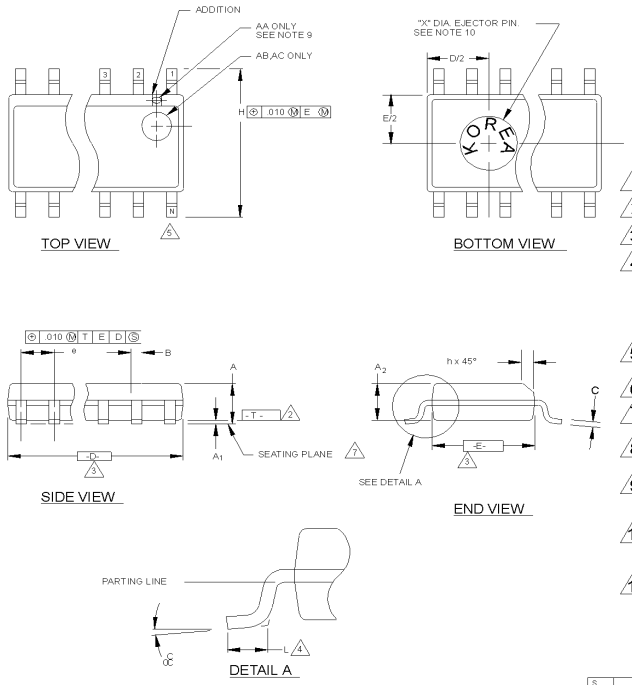

NOTES:

1. MAXIMUM DIE THICKNESS ALLOWABLE IS .015.
2. DIMENSIONING & TOLERANCES PER ANSI.Y14.5M - 1982.
3. "T" IS A REFERENCE DATUM.
4. "D" & "E" ARE REFERENCE DATUMS AND DO NOT INCLUDE MOLD FLASH OR PROTRUSIONS, BUT DOES INCLUDE MOLD MISMATCH AND ARE MEASURED AT THE MOLD PARTING LINE. MOLD FLASH OR PROTRUSIONS SHALL NOT EXCEED 0.006 INCHES PER SIDE.
5. "L" IS THE LENGTH OF TERMINAL FOR SOLDERING TO A SUBSTRATE.
6. "N" IS THE NUMBER OF TERMINAL POSITIONS.
7. TERMINAL POSITIONS ARE SHOWN FOR REFERENCE ONLY.
8. FORMED LEADS SHALL BE PLANAR WITH RESPECT TO ONE ANOTHER WITHIN .003 INCHES AT SEATING PLANE.
9. THE APPEARANCE OF PIN #1 I.D ON THE 8 LD IS OPTIONAL, ROUND TYPE ON SINGLE LEADFRAME AND RECTANGULAR TYPE ON MATRIX LEADFRAME.
10. COUNTRY OF ORIGIN LOCATION AND EJECTOR PIN ON PACKAGE BOTTOM IS OPTIONAL AND DEPEND ON ASSEMBLY LOCATION.
11. CONTROLLING DIMENSION: INCHES.

THIS TABLE IN INCHES

SYMBOL	COMMON DIMENSIONS			NOTE	NOTE VARI-ATIONS	3 D			5 N
	MIN.	NOM.	MAX.			MIN.	NOM.	MAX.	
A	.061	.064	.068		AA	.189	.194	.196	8
A_1	.004	.006	.0098		AB	.337	.342	.344	14
A_2	.055	.058	.061		AC	.386	.391	.393	16
B	.0138	.016	.0192						
C	.0075	.008	.0098						
D	SEE VARIATIONS			3					
E	.150	.155	.157						
e	.050 BSC								
H	.230	.236	.244						
h	.010	.013	.016						
L	.016	.025	.035						
N	SEE VARIATIONS			5					
α	0°	5°	8°						
X	.085	.093	.100						

THIS TABLE IN MILLIMETERS

SYMBOL	COMMON DIMENSIONS			NOTE	NOTE VARI-ATIONS	3 D			5 N
	MIN.	NOM.	MAX.			MIN.	NOM.	MAX.	
A	1.55	1.63	1.73		AA	4.80	4.93	4.98	8
A_1	0.127	0.15	0.25		AB	8.58	8.69	8.74	14
A_2	1.40	1.47	1.55		AC	9.80	9.93	9.98	16
B	0.35	0.41	0.49						
C	0.19	0.20	0.25						
D	SEE VARIATIONS			3					
E	3.81	3.94	3.99						
e	1.27 BSC								
H	5.84	5.99	6.20						
h	0.25	0.33	0.41						
L	0.41	0.64	0.89						
N	SEE VARIATIONS			5					
α	0°	5°	8°						
X	2.16	2.36	2.54						

© Cypress Semiconductor Corporation, 2001. The information contained herein is subject to change without notice. Cypress Semiconductor Corporation assumes no responsibility for the use of any circuitry other than circuitry embodied in a Cypress Semiconductor product. Nor does it convey or imply any license under patent or other rights. Cypress Semiconductor does not authorize its products for use as critical components in life-support systems where a malfunction or failure may reasonably be expected to result in significant injury to the user. The inclusion of Cypress Semiconductor products in life-support systems application implies that the manufacturer assumes all risk of such use and in doing so indemnifies Cypress Semiconductor against all charges.

Document Title: W162 Spread Aware™. Zero Delay Buffer Document Number: 38-07150				
REV.	**ECN NO.**	**Issue Date**	**Orig. of Change**	**Description of Change**
**	110590	12/19/01	DSG	Change from Spec number: 38-00788 to 38-07150
*A	122799	12/14/02	RBI	Add Power up Requirements to Operating Conditions Information