W158

Spread Spectrum System Frequency Synthesizer

Features

- **Maximized EMI suppression using Cypress's spread spectrum technology**
- **Intel® CK98 Specification compliant**
- **0.5% downspread outputs deliver up to 10 dB lower EMI**
- **Four skew-controlled copies of CPU output**
- **Eight copies of PCI output (synchronous w/CPU output)**
- **Four copies of 66-MHz fixed frequency 3.3V clock**
- **Two copies of CPU/2 outputs for synchronous memory reference**
- **Three copies of 16.67-MHz IOAPIC clock, synchronous to CPU clock**
- **One copy of 48-MHz USB output**
- **Two copies of 14.31818-MHz reference clock**
- **Programmable to 133- or 100-MHz operation**
- **Power management control pins for clock stop and shut down**
- **Available in 56-pin SSOP**

Key Specifications

Supply Voltages: ..... V_{DDQ3} = 3.3V±5%
V_{DDQ2} = 2.5V±5%

CPU Output Jitter: ..... 150 ps

CPUdiv2, IOAPIC Output Jitter: ..... 250 ps

48 MHz, 3V66, PCI Output Jitter: ..... 500 ps

CPU0:3, CPUdiv2_ 0:1 Output Skew: ..... 175 ps

PCI_F, PCI1:7 Output Skew: ..... 500 ps

3V66_0:3, IOAPIC0:2 Output Skew: ..... 250 ps

CPU to 3V66 Output Offset: ..... 0.0 to1.5 ns (CPU leads)

3V66 to PCI Output Offset:..... 1.5 to 3.0 ns (3V66 leads)

CPU to IOAPIC Output Offset: ..... 1.5 to 4.0 ns (CPU leads)

CPU to PCI Output Offset: ..... 1.5 to 4.0 ns (CPU leads)

Logic inputs, except SEL133/100#, have 250-kΩ pull-up resistors

Table 1. Pin Selectable Frequency[1]

SEL133/100#	CPU0:3 (MHz)	PCI
1	133 MHz	33.3 MHz
0	100 MHz	33.3 MHz

Note:
1. See *Table 2* for complete mode selection details.

Block Diagram

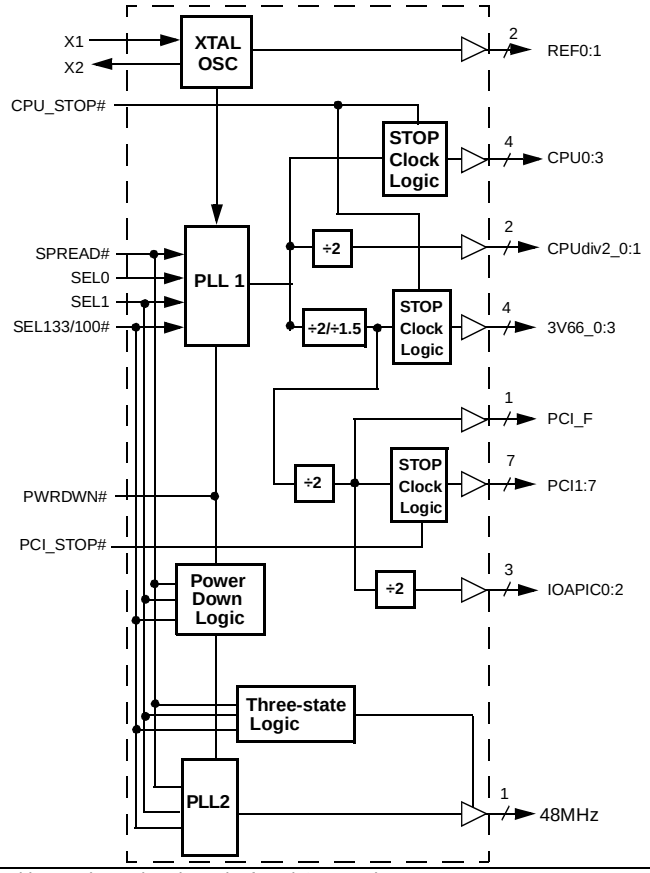

Pin Configuration

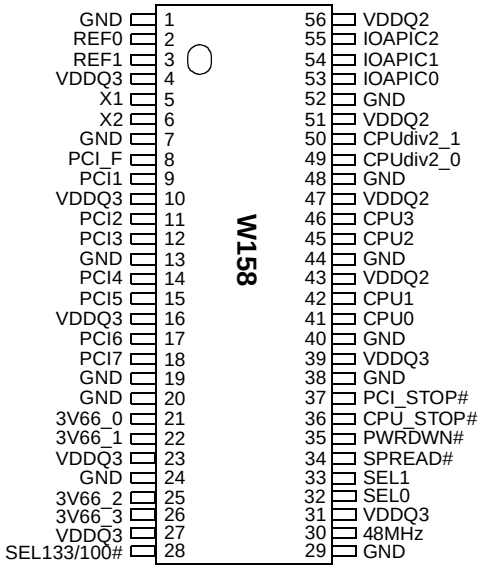

Intel is a registered trademark of Intel Corporation.

Pin Definitions

Pin Name	Pin No.	Pin Type	Pin Description
CPU0:3	41, 42, 45, 46	O	***CPU Clock Outputs 0 through 3:*** These four CPU clocks run at a frequency set by SEL133/100#. Output voltage swing is set by the voltage applied to VDDQ2.
CPUdiv2_ 0:1	49, 50	O	***Synchronous Memory Reference Clock Output 0 through 1:*** Reference clock for Direct RDRAM clock generators running at 1/2 CPU clock frequency. Output voltage swing is set by the voltage applied to VDDQ2.
PCI1:7	9, 11, 12, 14, 15, 17, 18	O	***PCI Clock Outputs 1 through 7:*** These seven PCI clock outputs run synchronously to the CPU clock. Voltage swing is set by the power connection to VDDQ3. PCI1:7 outputs are stopped when PCI _STOP# is held LOW.
PCI_F	8	O	***PCI_F (PCI Free-running):*** This PCI clock output runs synchronously to the CPU clock. Voltage swing is set by the power connection to VDDQ3. PCI_F is not affected by the state of PCI_STOP#.
REF0:1	2, 3	O	***14.318-MHz Reference Clock Output:*** 3.3V copies of the 14.318-MHz reference clock.
IOAPIC0:2	53, 54, 55	O	***I/O APIC Clock Output:*** Provides 16.67-MHz fixed frequency. The output voltage swing is set by the power connection to VDDQ2.
48MHz	30	O	***48-MHz Output:*** Fixed 48-MHz USB output. Output voltage swing is controlled by voltage applied to VDDQ3.
3V66_0:3	21, 22, 25, 26	O	***66-MHz Output 0 through 3:*** Fixed 66-MHz outputs. Output voltage swing is controlled by voltage applied to VDDQ3.
SEL0:1	32, 33	I	***Mode Select Input 0 through 1:*** 3.3V LVTTL-compatible input for selecting clock output modes.
SEL133/100#	28	I	***Frequency Selection Input:*** 3.3V LVTTL-compatible input that selects CPU output frequency as shown in *Table 1*.
X1	5	I	***Crystal Connection or External Reference Frequency Input:*** Connect to either a 14.318-MHz crystal or an external reference signal.
X2	6	O	***Crystal Connection:*** An output connection for an external 14.318-MHz crystal. If using an external reference, this pin must be left unconnected.
SPREAD#	34	I	***Active LOW Spread Spectrum Enable:*** 3.3V LVTTL-compatible input that enables spread spectrum mode when held LOW.
PWRDWN#	35	I	***Active LOW Power Down Input:*** 3.3V LVTTL-compatible asynchronous input that requests the device to enter power-down mode.
CPU_STOP#	36	I	***Active LOW CPU Clock Stop:*** 3.3V LVTTL-compatible asynchronous input that stops all CPU and 3V66 clocks when held LOW. CPUdiv2 outputs are unaffected by this input.
PCI_STOP#	37	I	***Active LOW PCI Clock Stop:*** 3.3V LVTTL-compatible asynchronous input that stops all PCI outputs except PCI_F when held LOW.
VDDQ3	4, 10, 16, 23, 27, 31, 39	P	***Power Connection:*** Power supply for PCI output buffers, 48-MHz USB output buffer, Reference output buffers, 3V66 output buffers, core logic, and PLL circuitry. Connect to 3.3V supply.
VDDQ2	43, 47, 51, 56	P	***Power Connection:*** Power supply for IOAPIC, CPU, and CPUdiv2 output buffers. Connect to 2.5V supply.
GND	1, 7, 13, 19, 20, 24, 29, 38, 40, 44, 48, 52	G	***Ground Connection:*** Connect all ground pins to the common system ground plane.

Overview

The W158 is designed to provide the essential frequency sources to work with advanced multiprocessing Intel architecture platforms. Split voltage supply signaling provides 2.5V and 3.3V clock frequencies operating up to 133 MHz.

From a low-cost 14.31818-MHz reference crystal oscillator, the W158 generates 2.5V clock outputs to support CPUs, core logic chip set, and Direct RDRAM clock generators. It also provides skew-controlled PCI and IOAPIC clocks synchronous to CPU clock, 48-MHz Universal Serial Bus (USB) clock, and replicates the 14.31818-MHz reference clock.

All CPU, PCI, and IOAPIC clocks can be synchronously modulated for spread spectrum operations. Cypress employs proprietary techniques that provide the maximum EMI reduction while minimizing the clock skews that could reduce system timing margins. Spread Spectrum modulation is enabled by the active LOW control signal SPREAD#.

The W158 also includes power management control inputs. By using these inputs, system logic can stop CPU and/or PCI clocks or power down the entire device to conserve system power.

Spread Spectrum Clocking

The device generates a clock that is frequency modulated in order to increase the bandwidth that it occupies. By increasing the bandwidth of the fundamental and its harmonics, the amplitudes of the radiated electromagnetic emissions are reduced. This effect is depicted in *Figure 1*.

As shown in *Figure 1*, a harmonic of a modulated clock has a much lower amplitude than that of an unmodulated signal. The reduction in amplitude is dependent on the harmonic number and the frequency deviation or spread. The equation for the reduction is:

$dB = 6.5 + 9*\log_{10}(P) + 9*\log_{10}(F)$

Where P is the percentage of deviation and F is the frequency in MHz where the reduction is measured.

The output clock is modulated with a waveform depicted in *Figure 2*. This waveform, as discussed in "Spread Spectrum Clock Generation for the Reduction of Radiated Emissions" by Bush, Fessler, and Hardin produces the maximum reduction in the amplitude of radiated electromagnetic emissions. The deviation selected for this chip is –0.5% downspread. *Figure 2* details the Cypress spreading pattern. Cypress does offer options with more spread and greater EMI reduction. Contact your local Sales representative for details on these devices.

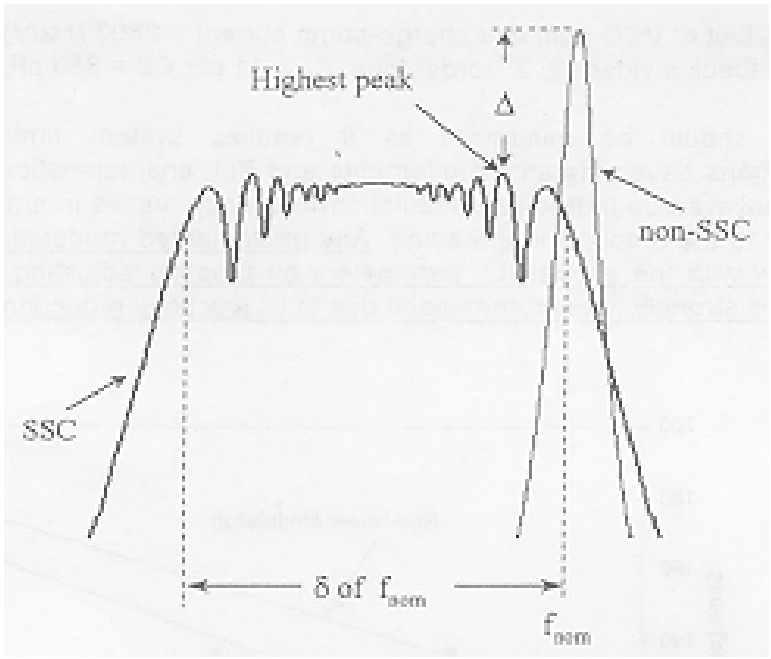

Figure 1. Clock Harmonic with and without SSCG Modulation Frequency Domain Representation

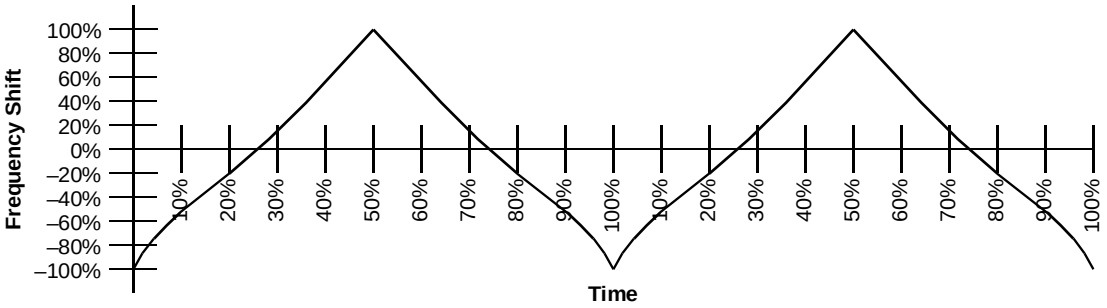

Figure 2. Modulation Waveform Profile

Mode Selection Functions

The W158 supports the following operating modes controlled through the SEL133/100#, SEL0, and SEL1 inputs.

Table 2. Select Functions

SEL133/100#	SEL1	SEL0	Function
0	0	0	All Outputs Three-State
0	0	1	(Reserved)
0	1	0	Active 100-MHz, 48-MHz PLL Inactive
0	1	1	Active 100-MHz, 48-MHz PLL Active
1	0	0	Test Mode
1	0	1	(Reserved)
1	1	0	Active 133-MHz, 48-MHz PLL Inactive
1	1	1	Active 133-MHz, 48-MHz PLL Active

Table 3. Truth Table

SEL 133/100#	SEL1	SEL0	CPU	CPUdiv2	3V66	PCI	48MHz	REF	IOAPIC	Notes
0	0	0	HI-Z	HI-Z	HI-Z	HI-Z	HI-Z	HI-Z	HI-Z	2
0	0	1	n/a	n/a	n/a	n/a	n/a	n/a	n/a	
0	1	0	100 MHz	50 MHz	66 MHz	33 MHz	HI-Z	14.318 MHz	16.67 MHz	3
0	1	1	100 MHz	50 MHz	66 MHz	33 MHz	48 MHz	14.318 MHz	16.67 MHz	4, 7, 8
1	0	0	TCLK/2	TCLK/4	TCLK/4	TCLK/8	TCLK/2	TCLK	TCLK16	5, 6
1	0	1	n/a	n/a	n/a	n/a	n/a	n/a	n/a	
1	1	0	133 MHz	66 MHz	66 MHz	33 MHz	HI-Z	14.318 MHz	16.67 MHz	3
1	1	1	133 MHz	66 MHz	66 MHz	33 MHz	48 MHz	14.318 MHz	16.67 MHz	4, 7, 8

Table 4. Maximum Supply Current

Condition	Max. 2.5V supply consumption Max. discrete cap loads, V_{DDQ2}=2.625V All static inputs=V_{DDQ3} or GND	Max. 3.3V supply consumption Max. discrete cap loads, V_{DDQ3}=3.465V or GND
Powerdown Mode (PWRDWN#=0)	100 µA	200 µA
Full Active 100 MHz SEL133/100#=0 SEL1, 0=11 CPU_STOP#, PCI_STOP#=1	75 mA	160 mA
Full Active 133 MHz SEL133/100#=0 SEL1, 0=11 CPU_STOP#, PCI_STOP#=1	90 mA	160 mA

Notes:

2. Provided for board level “bed of nails” testing.
3. 48-MHz PLL disabled to reduce component jitter.
4. Normal” mode of operation.
5. TCLK is a test clock over driven on the X1 input during test mode. TCLK mode is based on 133-MHz CPU select logic.
6. Required for DC output impedance verification.
7. Range of reference frequency is min.=14.316, nominal = 14.31818 MHz, max.=14.32 MHz.
8. Frequency accuracy of 48 MHz is +167 PPM to match USB default.

Table 5. Clock Enable Configuration[9, 10, 11, 12, 13, 14]

CPU_STOP#	PWRDWN#	PCI_STOP#	CPU	CPUdiv2	IOAPIC	3V66	PCI	PCI_F	REF, 48MHz	OSC.	VCOs
X	0	X	LOW	LOW	LOW	LOW	LOW	LOW	LOW	OFF	OFF
0	1	0	LOW	ON	ON	LOW	LOW	ON	ON	ON	ON
0	1	1	LOW	ON	ON	LOW	ON	ON	ON	ON	ON
1	1	0	ON	ON	ON	ON	LOW	ON	ON	ON	ON
1	1	1	ON	ON	ON	ON	ON	ON	ON	ON	ON

Table 6. Power Management State Transition[15, 16]

Signal	Signal State	Latency
		No. of rising edges of PCI Clock
CPU_STOP#	0 (disabled)	1
	1 (enabled)	1
PCI_STOP#	0 (disabled)	1
	1 (enabled)	1
PWRDWN#	1 (normal operation)	3 ms
	0 (power down)	2 max.

Timing Diagrams

CPU_STOP# Timing Diagram[17, 18, 19, 20, 21, 22]

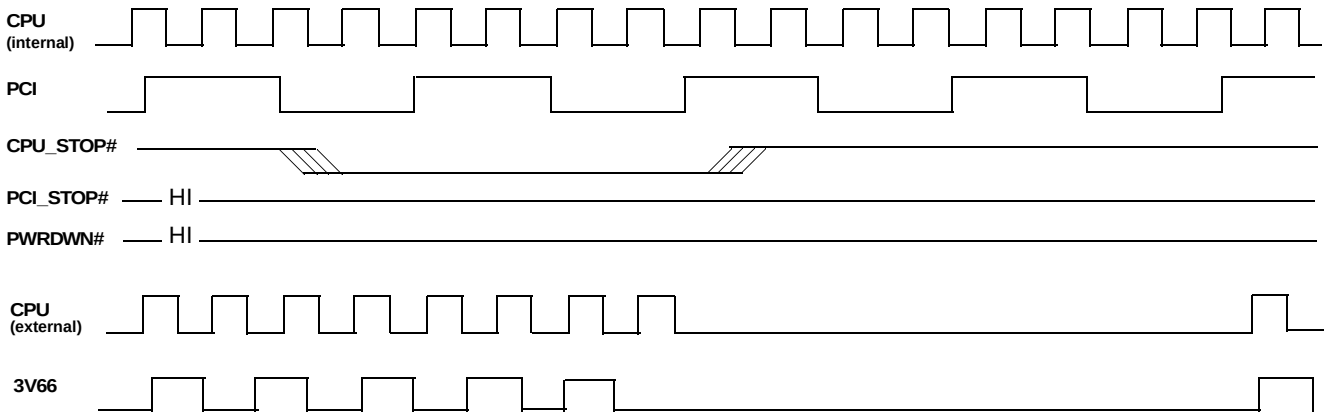

Notes:
9. LOW means outputs held static LOW as per latency requirement below.
10. ON means active.
11. PWRDWN# pulled LOW, impacts all outputs including REF and 48-MHz outputs.
12. All 3V66 as well as all CPU clocks stop cleanly when CPU_STOP# is pulled LOW.
13. CPUdiv2, IOAPIC, REF, 48MHz signals are not controlled by the CPU_STOP# functionality and are enabled in all conditions except PWRDWN#=LOW.
14. An “x” indicates a “don’t care” condition.
15. Clock on/off latency is defined in the number of rising edges of the free-running PCI clock between when the clock disable goes LOW/HIGH to when the first valid clock comes out of the device.
16. Power up latency is from when PWRDWN# goes inactive (HIGH) to when the first valid clocks are driven from the device.
17. All internal timing is referenced to the CPU clock.
18. The internal label means inside the chip and is a reference only. This, in fact, may not be the way that the control is designed.
19. CPU_STOP# signal is an input signal that must be made synchronous to free-running PCI_F.
20. 3V66 clocks also stop/start before.
21. PWRDWN# and PCI_STOP# are shown in a HIGH state.
22. Diagrams shown with respect to 133 MHz. Similar operation when CPU clock is 100 MHz.

Timing Diagrams (continued)

PCI_STOP# Timing Diagram[18, 22, 23, 24, 25, 26]

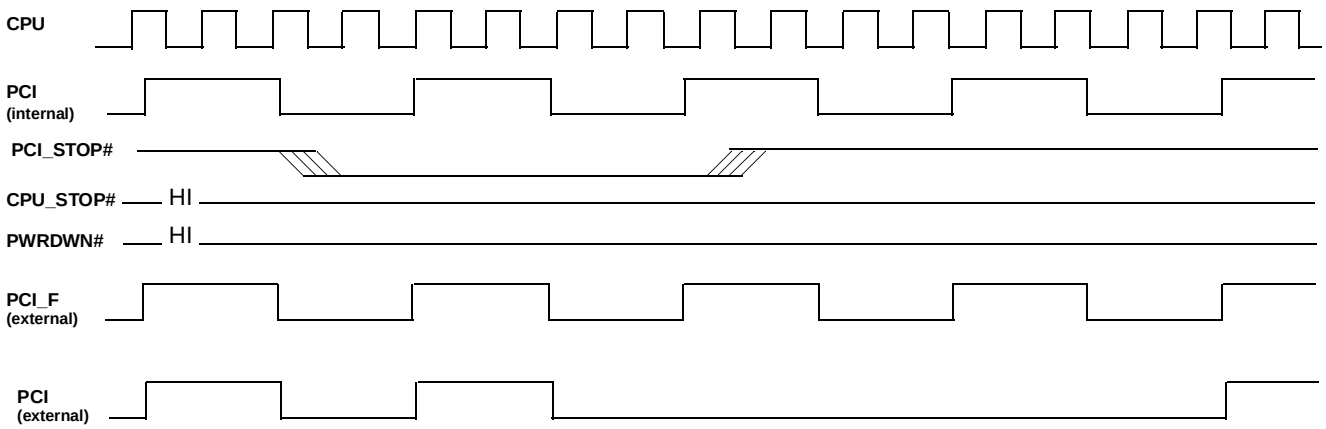

PWRDWN# Timing Diagram[18, 22, 23, 27, 28]

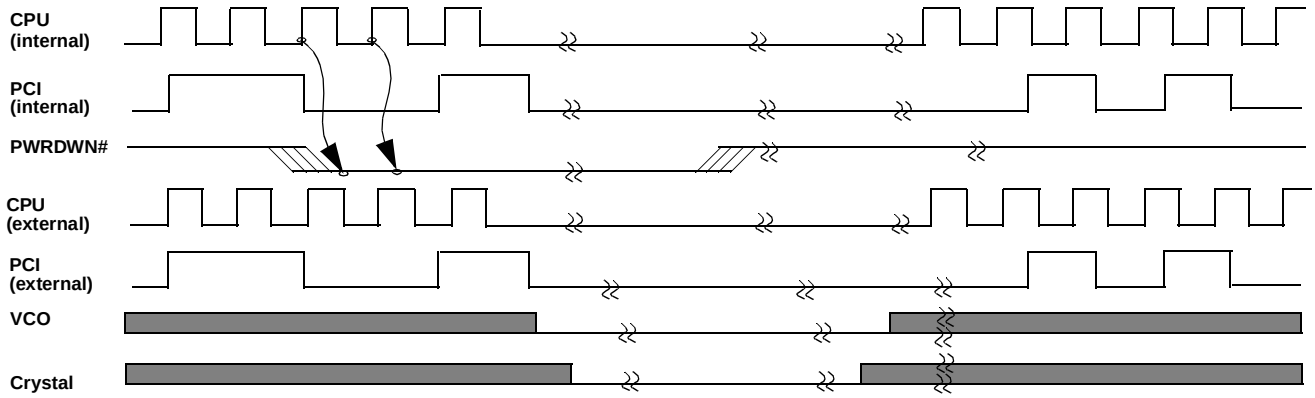

Notes:

23. All internal timing is referenced to the CPU clock.
24. PCI_STOP# signal is an input signal that must be made synchronous to PCI_F output.
25. All other clocks continue to run undisturbed.
26. PWRDWN# and CPU_STOP# are shown in a HIGH state.
27. PWRDWN is an asynchronous input and metastable conditions could exist. This signal must be synchronized.
28. The shaded Sections on the VCO and the Crystal signals indicate an active clock.

Absolute Maximum Ratings

Stresses greater than those listed in this table may cause permanent damage to the device. These represent a stress rating only. Operation of the device at these or any other conditions above those specified in the operating sections of this specification is not implied. Maximum conditions for extended periods may affect reliability.

Parameter	Description	Rating	Unit
V_{DD}, V_{IN}	Voltage on any pin with respect to GND	–0.5 to +7.0	V
T_{STG}	Storage Temperature	–65 to +150	°C
T_A	Operating Temperature	0 to +70	°C
T_B	Ambient Temperature under Bias	–55 to +125	°C
ESD_{PROT}	Input ESD Protection	2 (min.)	kV

DC Electrical Characteristics: T_A = 0°C to +70°C, V_{DDQ3} = 3.3V±5%, V_{DDQ2} = 2.5V±5%

Parameter	Description	Test Condition	Min.	Typ.	Max.	Unit
Supply Current						
$I_{DD-3.3V}$	Combined 3.3V Supply Current	CPU0:3 =133 MHz[29]			160	mA
$I_{DD-2.5}$	Combined 2.5V Supply Current	CPU0:3 =133 MHz[29]			90	mA
Logic Inputs (All referenced to V_{DDQ3} = 3.3V)						
V_{IL}	Input Low Voltage		GND –0.3		0.8	V
V_{IH}	Input High Voltage		2.0		VDD+ 0.3	V
I_{IL}	Input Low Current[30]				–25	µA
I_{IH}	Input High Current[30]				10	µA
I_{IL}	Input Low Current, SEL133/100#[30]				–5	µA
I_{IH}	Input High Current, SEL133/100#[30]				5	µA
Clock Outputs						
CPU, CPUdiv2, IOAPIC (Referenced to V_{DDQ2})		**Test Condition**	**Min.**	**Typ.**	**Max.**	**Unit**
V_{OL}	Output Low Voltage	I_{OL} = 1 mA			50	mV
V_{OH}	Output High Voltage	I_{OH} = –1 mA	2.2			V
I_{OL}	Output Low Current	V_{OL} = 1.25V	45	65	100	mA
I_{OH}	Output High Current	V_{OH} = 1.25V	45	65	100	mA
48MHz, REF (Referenced to V_{DDQ3})		**Test Condition**	**Min.**	**Typ.**	**Max.**	**Unit**
V_{OL}	Output Low Voltage	I_{OL} = 1 mA			50	mV
V_{OH}	Output High Voltage	I_{OH} = –1 mA	3.1			V
I_{OL}	Output Low Current	V_{OL} = 1.5V	45	65	100	mA
I_{OH}	Output High Current	V_{OH} = 1.5V	45	65	100	mA
PCI, 3V66 (Referenced to V_{DDQ3})		**Test Condition**	**Min.**	**Typ.**	**Max.**	**Unit**
V_{OL}	Output Low Voltage	I_{OL} = 1 mA			50	mV
V_{OH}	Output High Voltage	I_{OH} = –1 mA	3.1			V
I_{OL}	Output Low Current	V_{OL} = 1.5V	70	100	145	mA
I_{OH}	Output High Current	V_{OH} = 1.5V	65	95	135	mA

Notes:
29. All clock outputs loaded with 6" 60Ω transmission lines with 20-pF capacitors.
30. W158 logic inputs have internal pull-up devices, except SEL133/100# (pull-ups not CMOS level).

DC Electrical Characteristics: T_A = 0°C to +70°C, V_{DDQ3} = 3.3V±5%, V_{DDQ2} = 2.5V±5%

Parameter	Description	Test Condition	Min.	Typ.	Max.	Unit
Crystal Oscillator						
V_{TH}	X1 Input threshold Voltage[31]			1.65		V
C_{LOAD}	Load Capacitance, Imposed on External Crystal[32]			18		pF
$C_{IN,X1}$	X1 Input Capacitance[33]	Pin X2 unconnected		28		pF
Pin Capacitance/Inductance						
C_{IN}	Input Pin Capacitance	Except X1 and X2			5	pF
C_{OUT}	Output Pin Capacitance				6	pF
L_{IN}	Input Pin Inductance				7	nH

3.3V AC Electrical Characteristics

T_A = 0°C to +70°C, V_{DDQ3} = 3.3V±5%, V_{DDQ2} = 2.5V± 5%, f_{XTL} = 14.31818 MHz
Spread Spectrum function turned off

AC clock parameters are tested and guaranteed over stated operating conditions using the stated lump capacitive load at the clock output.[34]

3V66 Clock Outputs, 3V66_0:3 (Lump Capacitance Test Load = 30 pF)

Parameter	Description	Test Condition/Comments	Min.	Typ.	Max.	Unit
f	Frequency	Note 35		66.6		MHz
t_R	Output Rise Edge Rate	Measured from 0.4V to 2.4V	1		4	V/ns
t_F	Output Fall Edge Rate	Measured from 2.4V to 0.4V	1		4	V/ns
t_D	Duty Cycle	Measured on rising and falling edge at 1.5V	45		55	%
f_{ST}	Frequency Stabilization from Power-up (cold start)	Assumes full supply voltage reached within 1 ms from power-up. Short cycles exist prior to frequency stabilization.			3	ms
Z_o	AC Output Impedance	Average value during switching transition. Used for determining series termination value.		15		Ω

Notes:
31. X1 input threshold voltage (typical) is $V_{DD}/2$.
32. The W158 contains an internal crystal load capacitor between pin X1 and ground and another between pin X2 and ground. Total load placed on crystal is 18 pF; this includes typical stray capacitance of short PCB traces to crystal.
33. X1 input capacitance is applicable when driving X1 with an external clock source (X2 is left unconnected).
34. Period, jitter, offset, and skew measured on rising edge at 1.5V.
35. 3V66 is CPU/2 for CPU =133 MHz and (2 x CPU)/3 for CPU = 100 MHz.

PCI Clock Outputs, PCI_F and PCI1:7 (Lump Capacitance Test Load = 30 pF)

Parameter	Description	Test Condition/Comments	Min.	Typ.	Max.	Unit
t_P	Period	Measured on rising edge at 1.5V[36]	30			ns
t_H	High Time	Duration of clock cycle above 2.4V	12			ns
t_L	Low Time	Duration of clock cycle below 0.4V	12			ns
t_R	Output Rise Edge Rate	Measured from 0.4V to 2.4V	1		4	V/ns
t_F	Output Fall Edge Rate	Measured from 2.4V to 0.4V	1		4	V/ns
t_D	Duty Cycle	Measured on rising and falling edge at 1.5V	45		55	%
t_{JC}	Jitter, Cycle-to-Cycle	Measured on rising edge at 1.5V. Maximum difference of cycle time between two adjacent cycles.			500	ps
t_{SK}	Output Skew	Measured on rising edge at 1.5V			500	ps
t_O	3V66 to PCI Clock Skew	Covers all 3V66/PCI outputs. Measured on rising edge at 1.5V. 3V66 leads PCI output.	1.5		3	ns
t_q	CPU to PCI Clock Skew	Covers all CPU/PCI outputs. Measured on rising edge at 1.5V. CPU leads PCI output.	1.5		4	ns
f_{ST}	Frequency Stabilization from Power-up (cold start)	Assumes full supply voltage reached within 1 ms from power-up. Short cycles exist prior to frequency stabilization.			3	ms
Z_o	AC Output Impedance	Average value during switching transition. Used for determining series termination value.		15		Ω

REF Clock Outputs, REF0:1 (Lump Capacitance Test Load = 20 pF)

Parameter	Description	Test Condition/Comments	Min.	Typ.	Max.	Unit
f	Frequency, Actual	Frequency generated by crystal oscillator		14.318		MHz
t_R	Output Rise Edge Rate	Measured from 0.4V to 2.4V	0.5		2	V/ns
t_F	Output Fall Edge Rate	Measured from 2.4V to 0.4V	0.5		2	V/ns
t_D	Duty Cycle	Measured on rising and falling edge at 1.5V	45		55	%
f_{ST}	Frequency Stabilization from Power-up (cold start)	Assumes full supply voltage reached within 1 ms from power-up. Short cycles exist prior to frequency stabilization.			3	ms
Z_o	AC Output Impedance	Average value during switching transition. Used for determining series termination value.		25		Ω

48-MHZ Clock Output (Lump Capacitance Test Load = 20 pF)

Parameter	Description	Test Condition/Comments	Min.	Typ.	Max.	Unit
f	Frequency, Actual	Determined by PLL divider ratio (see m/n below)		48.008		MHz
f_D	Deviation from 48 MHz	(48.008 – 48)/48		+167		ppm
m/n	PLL Ratio	(14.31818 MHz x 57/17 = 48.008 MHz)		57/17		
t_R	Output Rise Edge Rate	Measured from 0.4V to 2.4V	0.5		2	V/ns
t_F	Output Fall Edge Rate	Measured from 2.4V to 0.4V	0.5		2	V/ns
t_D	Duty Cycle	Measured on rising and falling edge at 1.5V	45		55	%
f_{ST}	Frequency Stabilization from Power-up (cold start)	Assumes full supply voltage reached within 1 ms from power-up. Short cycles exist prior to frequency stabilization.			3	ms
Z_o	AC Output Impedance	Average value during switching transition. Used for determining series termination value.		25		Ω

Note:

36. PCI clock is CPU/4 for CPU = 133 MHz and CPU/3 for CPU = 100 MHz.

2.5V AC Electrical Characteristics

T_A = 0°C to +70°C, V_{DDQ3} = 3.3V±5%, V_{DDQ2}= 2.5V±5%
f_{XTL} = 14.31818 MHz
Spread Spectrum function turned off

AC clock parameters are tested and guaranteed over stated operating conditions using the stated lump capacitive load at the clock output.[37]

CPU Clock Outputs, CPU0:3 (Lump Capacitance Test Load = 20 pF)

Parameter	Description	Test Condition/Comments	CPU = 133 MHz			CPU = 100 MHz			Unit
			Min.	Typ.	Max.	Min.	Typ.	Max.	
t_P	Period	Measured on rising edge at 1.25V	7.5		7.65	10		10.2	ns
t_H	High Time	Duration of clock cycle above 2.0V	1.87			3.0			ns
t_L	Low Time	Duration of clock cycle below 0.4V	1.67			2.8			ns
t_R	Output Rise Edge Rate	Measured from 0.4V to 2.0V	1		4	1		4	V/ns
t_F	Output Fall Edge Rate	Measured from 2.0V to 0.4V	1		4	1		4	V/ns
t_D	Duty Cycle	Measured on rising and falling edge at 1.25V	45		55	45		55	%
t_{JC}	Jitter, Cycle-to-Cycle	Measured on rising edge at 1.25V. Maximum difference of cycle time between two adjacent cycles.			150			150	ps
t_{SK}	Output Skew	Measured on rising edge at 1.25V			175			175	ps
f_{ST}	Frequency Stabilization from Power-up (cold start)	Assumes full supply voltage reached within 1 ms from power-up. Short cycles exist prior to frequency stabilization.			3			3	ms
Z_o	AC Output Impedance	Average value during switching transition. Used for determining series termination value.		20			20		Ω

CPUdiv2 Clock Outputs, CPUdiv2_0:1 (Lump Capacitance Test Load = 20 pF)

Parameter	Description	Test Condition/Comments	CPU = 133 MHz			CPU = 100 MHz			Unit
			Min.	Typ.	Max.	Min.	Typ.	Max.	
t_P	Period	Measured on rising edge at 1.25V	15		15.3	20		20.4	ns
t_H	High Time	Duration of clock cycle above 2.0V	5.25			7.5			ns
t_L	Low Time	Duration of clock cycle below 0.4V	5.05			7.3			ns
t_R	Output Rise Edge Rate	Measured from 0.4V to 2.0V	1		4	1		4	V/ns
t_F	Output Fall Edge Rate	Measured from 2.0V to 0.4V	1		4	1		4	V/ns
t_D	Duty Cycle	Measured on rising and falling edge at 1.25V	45		55	45		55	%
t_{JC}	Jitter, Cycle-to-Cycle	Measured on rising edge at 1.25V. Maximum difference of cycle time between two adjacent cycles.			250			250	ps
t_{SK}	Output Skew	Measured on rising edge at 1.25V			175			175	ps
f_{ST}	Frequency Stabilization from Power-up (cold start)	Assumes full supply voltage reached within 1 ms from power-up. Short cycles exist prior to frequency stabilization.			3			3	ms
Z_o	AC Output Impedance	Average value during switching transition. Used for determining series termination value.		20			20		Ω

Note:
37. Period, Jitter, offset, and skew measured on rising edge at 1.25V.

IOAPIC Clock Outputs, IOAPIC0:2 (Lump Capacitance Test Load = 20 pF)

Parameter	Description	Test Condition/Comments	Min	Typ	Max	Unit
f	Frequency	Note 38		16.67		MHz
t_R	Output Rise Edge Rate	Measured from 0.4V to 2.0V	1		4	V/ns
t_F	Output Fall Edge Rate	Measured from 2.0V to 0.4V	1		4	V/ns
t_D	Duty Cycle	Measured on rising and falling edge at 1.25V	45		55	%
f_{ST}	Frequency Stabilization from Power-up (cold start)	Assumes full supply voltage reached within 1 ms from power-up. Short cycles exist prior to frequency stabilization.			3	ms
Z_o	AC Output Impedance	Average value during switching transition. Used for determining series termination value.		20		Ω

Note:
38. IOAPIC clock is CPU/8 for CPU = 133 MHz and CPU/6 for CPU = 100 MHz.

Ordering Information

Ordering Code	Package Name	Package Type
W158	H	56-pin SSOP (300 mils)

Document #: 38-00819

Package Diagram

56-Pin Small Shrink Outline Package (SSOP, 300 mils)

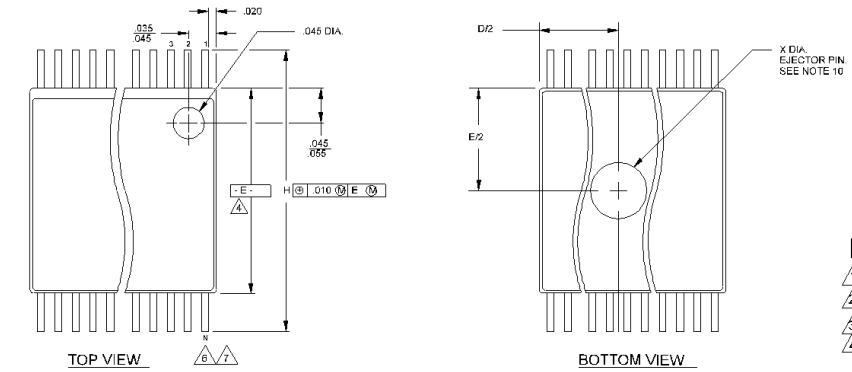

NOTES:

1. MAXIMUM DIE THICKNESS ALLOWABLE IS .025.
2. DIMENSIONING & TOLERANCING PER ANSI Y14.5M - 1982.
3. "T" IS A REFERENCE DATUM.
4. "D" & "E" ARE REFERENCE DATUMS AND DO NOT INCLUDE MOLD FLASH OR PROTRUSIONS, BUT DOES INCLUDE MOLD MISMATCH AND ARE MEASURED AT THE MOLD PARTING LINE. MOLD FLASH OR PROTRUSIONS SHALL NOT EXCEED .006 INCHES PER SIDE.
5. "L" IS THE LENGTH OF TERMINAL FOR SOLDERING TO A SUBSTRATE.
6. "N" IS THE NUMBER OF TERMINAL POSITIONS.
7. TERMINAL POSITIONS ARE SHOWN FOR REFERENCE ONLY.
8. FORMED LEADS SHALL BE PLANAR WITH RESPECT TO ONE ANOTHER WITHIN .003 INCHES AT SEATING PLANE.
9. CONTROLLING DIMENSION: INCHES.
10. COUNTRY OF ORIGIN LOCATION AND EJECTOR PIN ON PACKAGE BOTTOM IS OPTIONAL AND DEPENDS ON ASSEMBLY LOCATION.
11. THESE DIMENSIONS APPLY TO THE FLAT SECTION OF THE LEAD BETWEEN .005 INCHES AND .010 INCHES FROM THE LEAD TIPS.
12. THIS PART IS COMPLIANT WITH JEDEC SPECIFICATION MO-118, VARIATIONS AA, AB, EXCEPT CHAMFER DIMENSION h. JEDEC SPECIFICATION FOR h IS .015"/.025".

SYMBOL	COMMON DIMENSIONS			NOTE	NOTE 4			NOTE 6
	MIN.	NOM.	MAX.	VARIATIONS	D MIN.	D NOM.	D MAX.	N
A	.095	.102	.110	AA	.620	.625	.630	48
A_1	.008	.012	.016	AB	.720	.725	.730	56
A_2	.088	.090	.092					
b	.008	.010	.0135					
b_1	.008	.010	.012					
c	.005	-	.010					
c_1	.005	.006	.0085					
D	SEE VARIATIONS			4				
E	.292	.296	.299					
e	.025 BSC							
H	.400	.406	.410					
h	.010	.013	.016					
L	.024	.032	.040					
N	SEE VARIATIONS			6				
X	.085	.093	.100	10				
α°	0°	5°	8°					

THIS TABLE IN INCHES

Summary of nominal dimensions in inches:

Body Width: 0.296
Lead Pitch: 0.025
Body Length: 0.625
Body Height: 0.102

SYMBOL	COMMON DIMENSIONS			NOTE	NOTE 4			NOTE 6
	MIN.	NOM.	MAX.	VARIATIONS	D MIN.	D NOM.	D MAX.	N
A	2.41	2.59	2.79	AA	15.75	15.88	16.00	48
A_1	0.20	0.31	0.41	AB	18.29	18.42	18.54	56
A_2	2.24	2.29	2.34					
b	0.203	0.254	0.343					
b_1	0.203	0.254	0.305					
c	0.127	-	0.254					
c_1	0.127	0.152	0.216					
D	SEE VARIATIONS			4				
E	7.42	7.52	7.59					
e	0.635 BSC							
H	10.16	10.31	10.41					
h	0.25	0.33	0.41					
L	0.61	0.81	1.02					
N	SEE VARIATIONS			6				
X	2.16	2.36	2.54	10				
α°	0°	5°	8°					

THIS TABLE IN MILLIMETERS

© Cypress Semiconductor Corporation, 1999. The information contained herein is subject to change without notice. Cypress Semiconductor Corporation assumes no responsibility for the use of any circuitry other than circuitry embodied in a Cypress Semiconductor product. Nor does it convey or imply any license under patent or other rights. Cypress Semiconductor does not authorize its products for use as critical components in life-support systems where a malfunction or failure may reasonably be expected to result in significant injury to the user. The inclusion of Cypress Semiconductor products in life-support systems application implies that the manufacturer assumes all risk of such use and in doing so indemnifies Cypress Semiconductor against all charges.