STW12NK90Z

N-channel 900V - 0.72Ω - 11A - TO-247
Zener-protected SuperMESH™ Power MOSFET

General features

Type	V_{DSS}	$R_{DS(on)}$	I_D	P_W
STW12NK90Z	900V	<0.88Ω	11A	230W

- Extremely high dv/dt capability
- 100% avalanche tested
- Gate charge minimized
- Very low intrinsic capacitances
- Very good manufacturing repeatibility

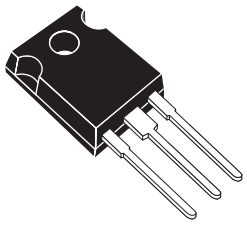

TO-247

Description

The SuperMESH™ series is obtained through an extreme optimization of ST's well established strip-based PowerMESH™ layout. In addition to pushing on-resistance significantly down, special care is taken to ensure a very good dv/dt capability for the most demanding applications. Such series complements ST full range of high voltage MOSFETs including revolutionary MDmesh™ products.

Internal schematic diagram

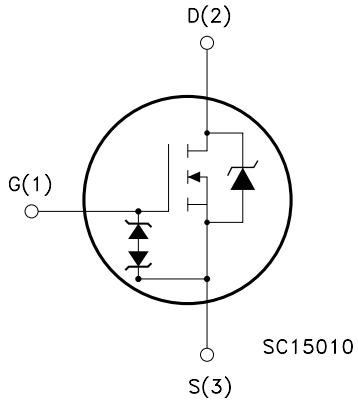

Applications

- Switching application

Order codes

Part number	Marking	Package	Packaging
STW12NK90Z	W12NK90Z	TO-247	Tube

Contents

1 Electrical ratings 3
1.1 Protection features of gate-to-source zener diodes 4
2 Electrical characteristics 5
2.1 Electrical characteristics (curves) 7
3 Test circuit 9
4 Package mechanical data 11
5 Revision history 13

1 Electrical ratings

Table 1. Absolute maximum ratings

Symbol	Parameter	Value	Unit
V_{DS}	Drain-source voltage (V_{GS} = 0)	900	V
V_{GS}	Gate- source voltage	± 30	V
I_D	Drain current (continuous) at T_C = 25°C	11	A
I_D	Drain current (continuous) at T_C = 100°C	7	A
I_{DM} (1)	Drain current (pulsed)	44	A
P_{tot}	Total dissipation at T_C = 25°C	230	W
	Derating Factor	1.85	W/°C
$V_{ESD(G-S)}$	Gate source ESD(HBM-C=100pF, R=1.5KΩ)	6000	V
E_{AS} (2)	Single pulse avalanche energy	4.5	mJ
T_{stg}	Storage temperature	-55 to 150	°C
T_j	Max. operating junction temperature		

1. Pulse width limited by safe operating area.
2. I_{SD} ≤11A, di/dt ≤200A/µs, V_{DD} ≤$V_{(BR)DSS}$, T_j ≤T_{JMAX}.

Table 2. Thermal data

Rthj-case	Thermal resistance junction-case max	0.54	°C/W
Rthj-amb	Thermal resistance junction-ambient max	50	°C/W
T_J	Maximum lead temperature for soldering purpose	300	°C

Table 3. Avalanche characteristics

Symbol	Parameter	Max value	Unit
I_{AR}	Avalanche current, repetitive or not-repetitive (pulse width limited by T_j max)	11	A
E_{AS}	Single pulse avalanche energy (starting T_j = 25 °C, I_D = I_{AR}, V_{DD} = 50 V)	500	mJ

Table 4. Gate-source zener diode

Symbol	Parameter	Test conditions	Min.	Typ.	Max.	Unit
BV_{GSO}	Gate-source breakdown voltage	Igs=± 1mA (open drain)	30			V

1.1 Protection features of gate-to-source zener diodes

The built-in back-to-back Zener diodes have specifically been designed to enhance not only the device's ESD capability, but also to make them safely absorb possible voltage transients that may occasionally be applied from gate to source. In this respect the Zener voltage is appropriate to achieve an efficient and cost-effective intervention to protect the device's integrity. These integrated Zener diodes thus avoid the usage of external components.

2 Electrical characteristics

(T_{CASE}=25°C unless otherwise specified)

Table 5. On/off states

Symbol	Parameter	Test conditions	Min.	Typ.	Max.	Unit
$V_{(BR)DSS}$	Drain-source breakdown voltage	I_D = 1mA, V_{GS} =0	900			V
I_{DSS}	Zero gate voltage drain current (V_{GS} = 0)	V_{DS} = max rating V_{DS} = max rating, T_C = 125°C			1 50	µA µA
I_{GSS}	Gate-body leakage current (V_{DS} = 0)	V_{GS} = ± 20V			±10	µA
$V_{GS(th)}$	Gate threshold voltage	V_{DS} = V_{GS}, I_D = 100µA	3	3.75	4.5	V
$R_{DS(on)}$	Static drain-source on resistance	V_{GS} = 10V, I_D = 5.5A		0.72	0.88	Ω

Table 6. Dynamic

Symbol	Parameter	Test conditions	Min.	Typ.	Max.	Unit
g_{fs} (1)	Forward transconductance	V_{DS} = 15V, I_D = 5.5A		11		S
C_{iss} C_{oss} C_{rss}	Input capacitance Output capacitance Reverse transfer capacitance	V_{DS} = 25V, f = 1MHz, V_{GS} = 0		3500 280 58		pF pF pF
$C_{oss\ eq}$ (2)	Equivalent output capacitance	V_{GS} = 0V, V_{DS} = 0V to 800V		117		pF
$t_{d(on)}$ t_r $t_{d(off)}$ t_f	Turn-on delay time Rise time Turn-off delay time Fall time	V_{DD} = 450V, I_D = 5A R_G = 4.7Ω V_{GS} = 10V (see *Figure 13*)		31 20 88 55		ns ns ns ns
Q_g Q_{gs} Q_{gd}	Total gate charge Gate-source charge Gate-drain charge	V_{DD} = 720V, I_D = 10A, V_{GS} = 10V, R_G = 4.7Ω (see *Figure 14*)		113 19 60	152	nC nC nC

1. Pulsed: Pulse duration = 300 µs, duty cycle 1.5 %.
2. Coss eq. is defined as a constant equivalent capacitance giving the same charging time as C_{oss} when V_{DS} increases from 0 to 80% V_{DSS}.

Table 7. Source drain diode

Symbol	Parameter	Test conditions	Min.	Typ.	Max.	Unit
I_{SD} I_{SDM} (1)	Source-drain current Source-drain current (pulsed)				11 44	A A
V_{SD} (2)	Forward on voltage	I_{SD} = 11A, V_{GS} = 0			1.6	V
t_{rr} Q_{rr} I_{RRM}	Reverse recovery time Reverse recovery charge Reverse recovery current	I_{SD} = 10A, di/dt = 100A/µs, V_{DD} = 50V, T_j = 25°C (see *Figure 15*)		728 7.8 21.6		ns µC A
t_{rr} Q_{rr} I_{RRM}	Reverse recovery time Reverse recovery charge Reverse recovery current	I_{SD} = 10A, di/dt = 100A/µs, V_{DD} = 50V, T_j = 150°C (see *Figure 15*)		964 11 23		ns µC A

1. Pulse width limited by safe operating area.
2. Pulsed: Pulse duration = 300 µs, duty cycle 1.5 %

2.1 Electrical characteristics (curves)

Figure 1. Safe operating area

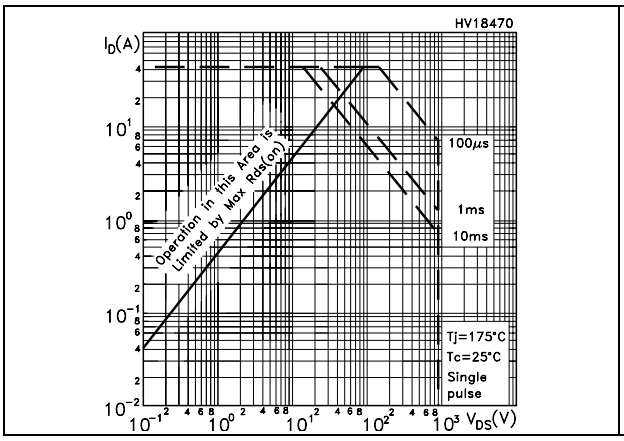

Figure 2. Thermal impedance

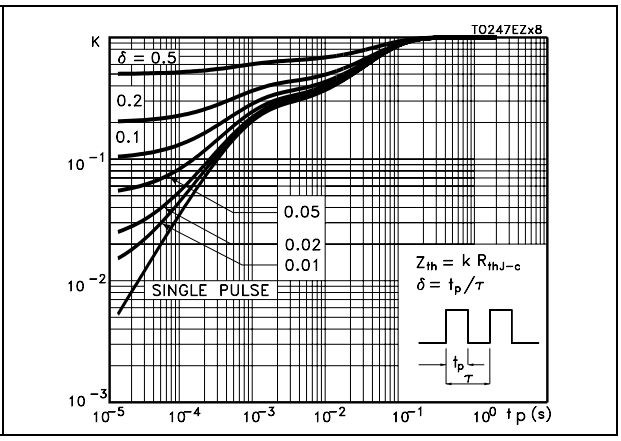

Figure 3. Output characterisics

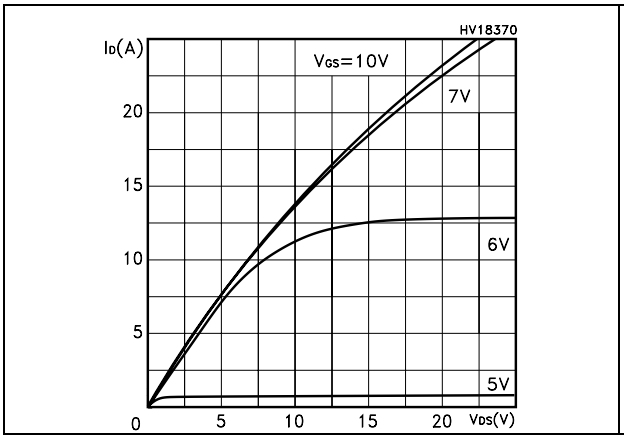

Figure 4. Transfer characteristics

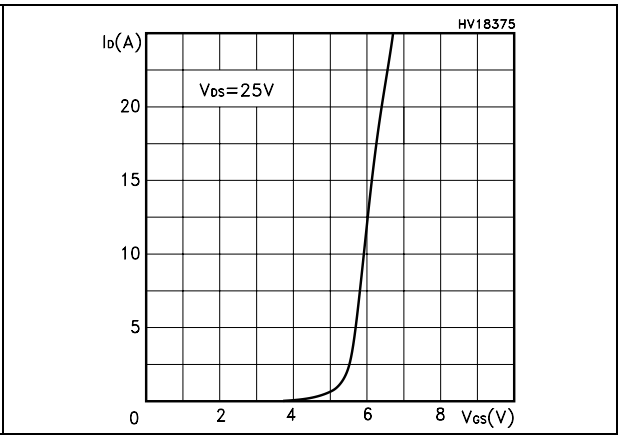

Figure 5. Transconductance

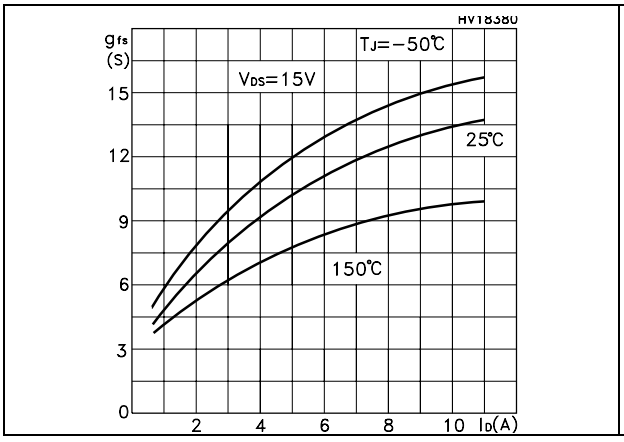

Figure 6. Static drain-source on resistance

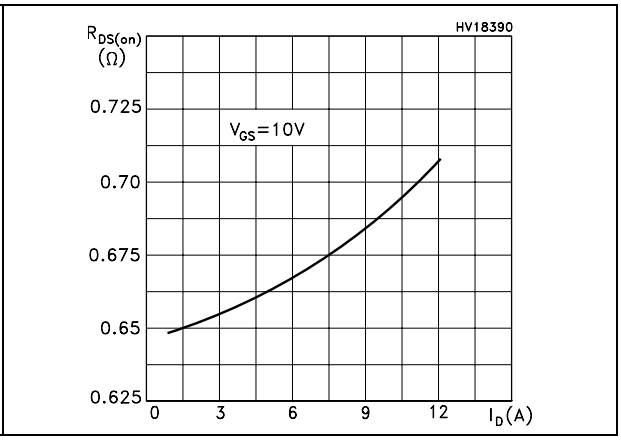

Figure 7. Gate charge vs gate-source voltage

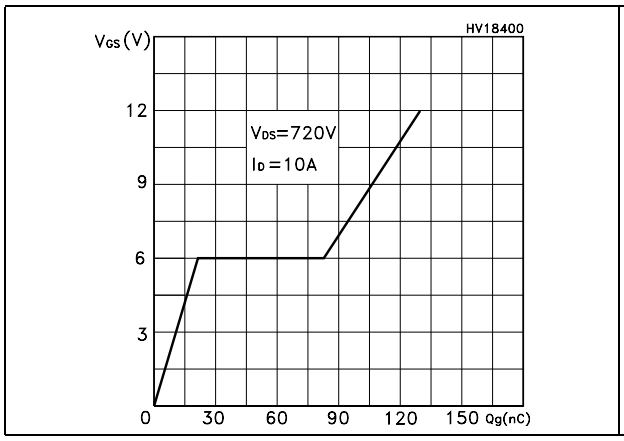

Figure 8. Capacitance variations

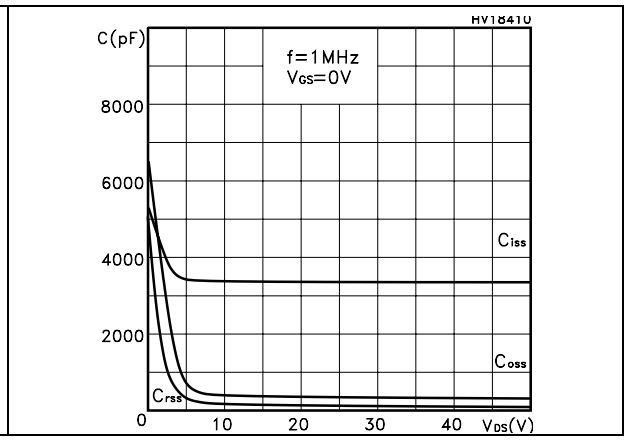

Figure 9. Normalized gate threshold voltage vs temperature

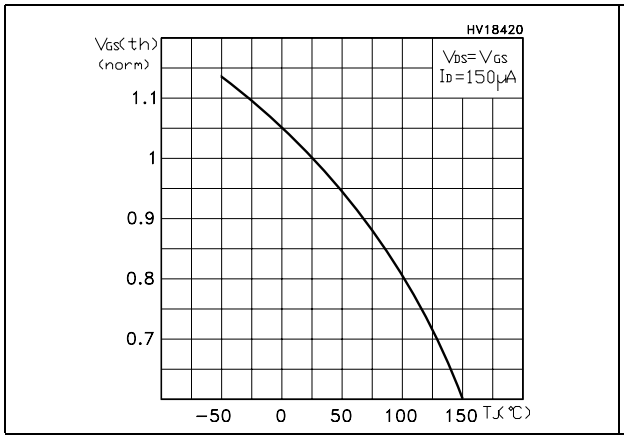

Figure 10. Normalized on resistance vs temperature

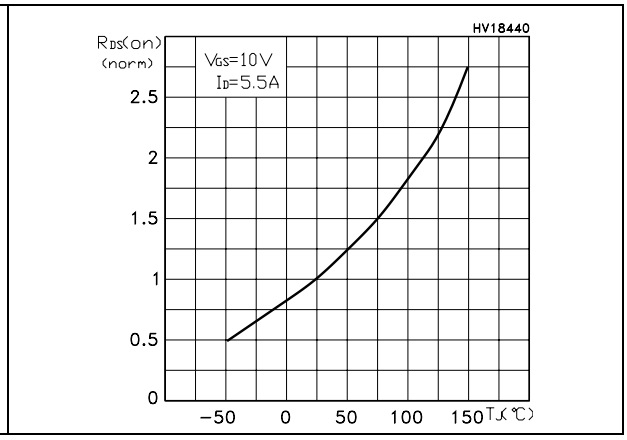

Figure 11. Source-drain diode forward characteristics

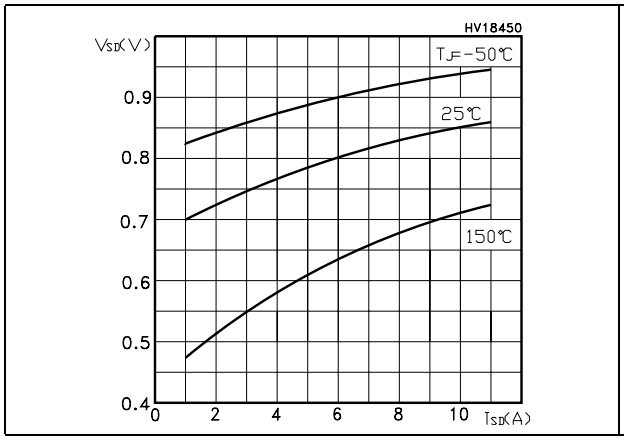

Figure 12. Normalized breakdown voltage vs temperature

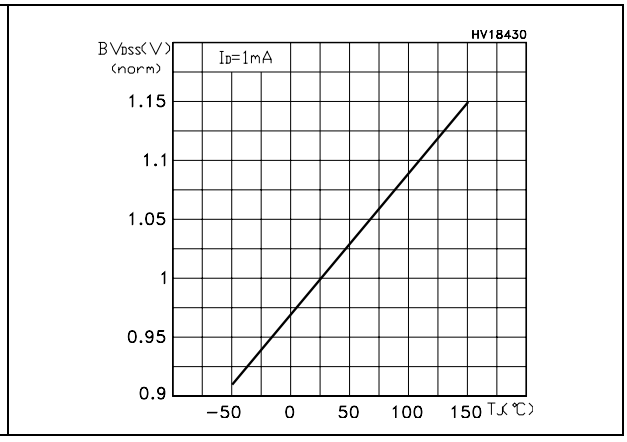

3 Test circuit

Figure 13. Switching times test circuit for resistive load

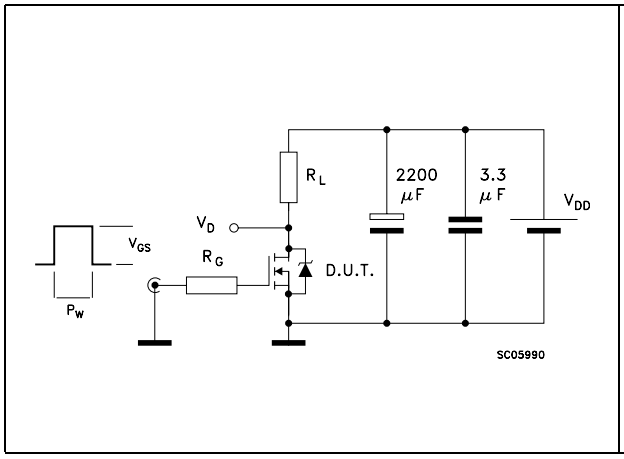

Figure 14. Gate charge test circuit

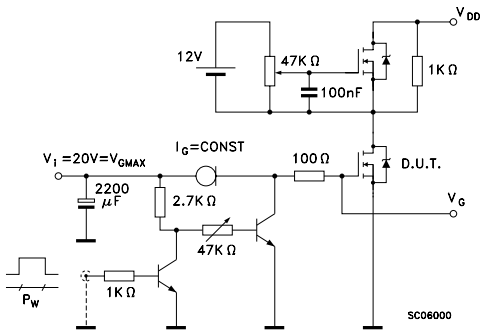

Figure 15. Test circuit for inductive load switching and diode recovery times

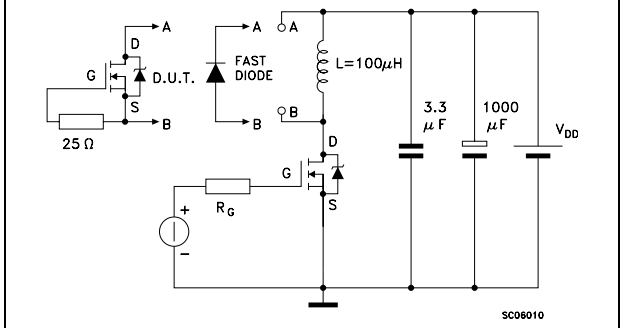

Figure 16. Unclamped Inductive load test circuit

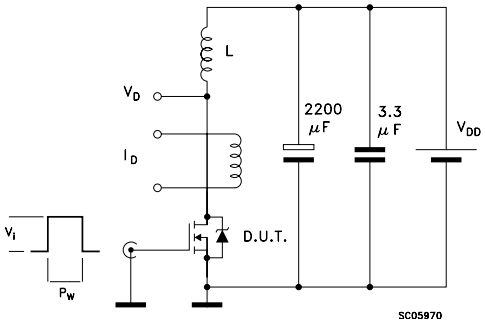

Figure 17. Unclamped inductive waveform

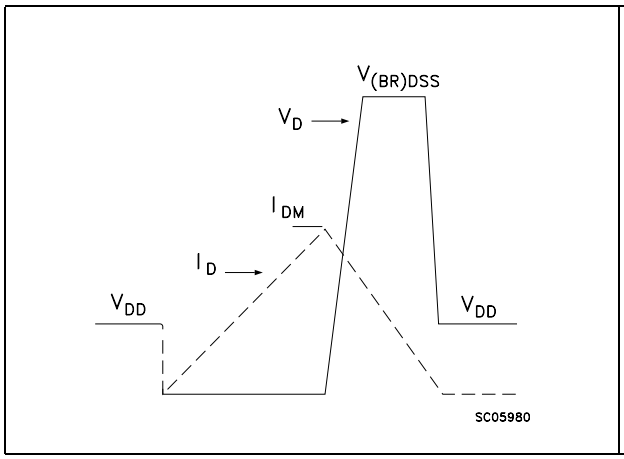

Figure 18. Switching time waveform

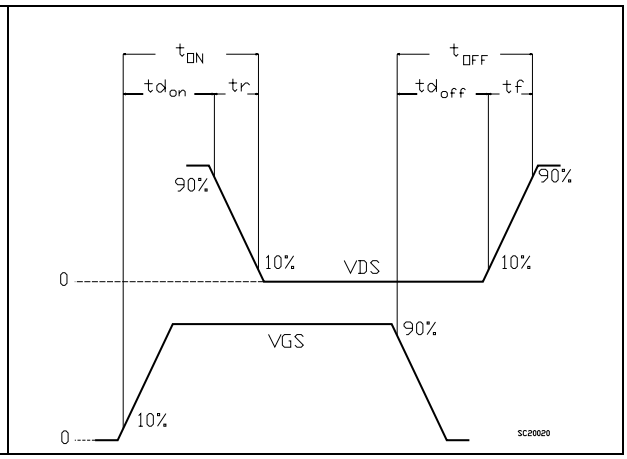

4 Package mechanical data

In order to meet environmental requirements, ST offers these devices in ECOPACK® packages. These packages have a Lead-free second level interconnect . The category of second level interconnect is marked on the package and on the inner box label, in compliance with JEDEC Standard JESD97. The maximum ratings related to soldering conditions are also marked on the inner box label. ECOPACK is an ST trademark. ECOPACK specifications are available at: www.st.com

TO-247 MECHANICAL DATA

DIM.	mm.			inch		
	MIN.	TYP	MAX.	MIN.	TYP.	MAX.
A	4.85		5.15	0.19		0.20
A1	2.20		2.60	0.086		0.102
b	1.0		1.40	0.039		0.055
b1	2.0		2.40	0.079		0.094
b2	3.0		3.40	0.118		0.134
c	0.40		0.80	0.015		0.03
D	19.85		20.15	0.781		0.793
E	15.45		15.75	0.608		0.620
e		5.45			0.214	
L	14.20		14.80	0.560		0.582
L1	3.70		4.30	0.14		0.17
L2		18.50			0.728	
øP	3.55		3.65	0.140		0.143
øR	4.50		5.50	0.177		0.216
S		5.50			0.216	

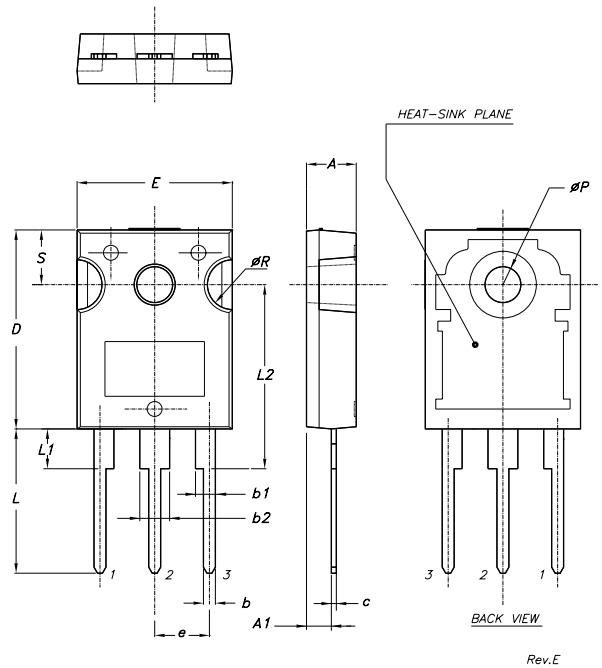

5 Revision history

Table 8. Revision history

Date	Revision	Changes
21-Jun-2004	4	Complete version
17-Oct-2006	5	New template, no content change

Please Read Carefully:

Information in this document is provided solely in connection with ST products. STMicroelectronics NV and its subsidiaries (“ST”) reserve the right to make changes, corrections, modifications or improvements, to this document, and the products and services described herein at any time, without notice.

All ST products are sold pursuant to ST’s terms and conditions of sale.

Purchasers are solely responsible for the choice, selection and use of the ST products and services described herein, and ST assumes no liability whatsoever relating to the choice, selection or use of the ST products and services described herein.

No license, express or implied, by estoppel or otherwise, to any intellectual property rights is granted under this document. If any part of this document refers to any third party products or services it shall not be deemed a license grant by ST for the use of such third party products or services, or any intellectual property contained therein or considered as a warranty covering the use in any manner whatsoever of such third party products or services or any intellectual property contained therein.

UNLESS OTHERWISE SET FORTH IN ST’S TERMS AND CONDITIONS OF SALE ST DISCLAIMS ANY EXPRESS OR IMPLIED WARRANTY WITH RESPECT TO THE USE AND/OR SALE OF ST PRODUCTS INCLUDING WITHOUT LIMITATION IMPLIED WARRANTIES OF MERCHANTABILITY, FITNESS FOR A PARTICULAR PURPOSE (AND THEIR EQUIVALENTS UNDER THE LAWS OF ANY JURISDICTION), OR INFRINGEMENT OF ANY PATENT, COPYRIGHT OR OTHER INTELLECTUAL PROPERTY RIGHT.

UNLESS EXPRESSLY APPROVED IN WRITING BY AN AUTHORIZED ST REPRESENTATIVE, ST PRODUCTS ARE NOT RECOMMENDED, AUTHORIZED OR WARRANTED FOR USE IN MILITARY, AIR CRAFT, SPACE, LIFE SAVING, OR LIFE SUSTAINING APPLICATIONS, NOR IN PRODUCTS OR SYSTEMS WHERE FAILURE OR MALFUNCTION MAY RESULT IN PERSONAL INJURY, DEATH, OR SEVERE PROPERTY OR ENVIRONMENTAL DAMAGE. ST PRODUCTS WHICH ARE NOT SPECIFIED AS "AUTOMOTIVE GRADE" MAY ONLY BE USED IN AUTOMOTIVE APPLICATIONS AT USER’S OWN RISK.

Resale of ST products with provisions different from the statements and/or technical features set forth in this document shall immediately void any warranty granted by ST for the ST product or service described herein and shall not create or extend in any manner whatsoever, any liability of ST.

ST and the ST logo are trademarks or registered trademarks of ST in various countries.

Information in this document supersedes and replaces all information previously supplied.

The ST logo is a registered trademark of STMicroelectronics. All other names are the property of their respective owners.

© 2006 STMicroelectronics - All rights reserved

STMicroelectronics group of companies

Australia - Belgium - Brazil - Canada - China - Czech Republic - Finland - France - Germany - Hong Kong - India - Israel - Italy - Japan - Malaysia - Malta - Morocco - Singapore - Spain - Sweden - Switzerland - United Kingdom - United States of America

www.st.com