Virtex-5 FPGA ML555 Development Kit for PCI and PCI Express Designs

User Guide

UG201 (v1.4) March 10, 2008

XILINX®

Xilinx is disclosing this Document and Intellectual Property (hereinafter “the Design”) to you for use in the development of designs to operate on, or interface with Xilinx FPGAs. Except as stated herein, none of the Design may be copied, reproduced, distributed, republished, downloaded, displayed, posted, or transmitted in any form or by any means including, but not limited to, electronic, mechanical, photocopying, recording, or otherwise, without the prior written consent of Xilinx. Any unauthorized use of the Design may violate copyright laws, trademark laws, the laws of privacy and publicity, and communications regulations and statutes.

Xilinx does not assume any liability arising out of the application or use of the Design; nor does Xilinx convey any license under its patents, copyrights, or any rights of others. You are responsible for obtaining any rights you may require for your use or implementation of the Design. Xilinx reserves the right to make changes, at any time, to the Design as deemed desirable in the sole discretion of Xilinx. Xilinx assumes no obligation to correct any errors contained herein or to advise you of any correction if such be made. Xilinx will not assume any liability for the accuracy or correctness of any engineering or technical support or assistance provided to you in connection with the Design.

THE DESIGN IS PROVIDED “AS IS” WITH ALL FAULTS, AND THE ENTIRE RISK AS TO ITS FUNCTION AND IMPLEMENTATION IS WITH YOU. YOU ACKNOWLEDGE AND AGREE THAT YOU HAVE NOT RELIED ON ANY ORAL OR WRITTEN INFORMATION OR ADVICE, WHETHER GIVEN BY XILINX, OR ITS AGENTS OR EMPLOYEES. XILINX MAKES NO OTHER WARRANTIES, WHETHER EXPRESS, IMPLIED, OR STATUTORY, REGARDING THE DESIGN, INCLUDING ANY WARRANTIES OF MERCHANTABILITY, FITNESS FOR A PARTICULAR PURPOSE, TITLE, AND NONINFRINGEMENT OF THIRD-PARTY RIGHTS.

IN NO EVENT WILL XILINX BE LIABLE FOR ANY CONSEQUENTIAL, INDIRECT, EXEMPLARY, SPECIAL, OR INCIDENTAL DAMAGES, INCLUDING ANY LOST DATA AND LOST PROFITS, ARISING FROM OR RELATING TO YOUR USE OF THE DESIGN, EVEN IF YOU HAVE BEEN ADVISED OF THE POSSIBILITY OF SUCH DAMAGES. THE TOTAL CUMULATIVE LIABILITY OF XILINX IN CONNECTION WITH YOUR USE OF THE DESIGN, WHETHER IN CONTRACT OR TORT OR OTHERWISE, WILL IN NO EVENT EXCEED THE AMOUNT OF FEES PAID BY YOU TO XILINX HEREUNDER FOR USE OF THE DESIGN. YOU ACKNOWLEDGE THAT THE FEES, IF ANY, REFLECT THE ALLOCATION OF RISK SET FORTH IN THIS AGREEMENT AND THAT XILINX WOULD NOT MAKE AVAILABLE THE DESIGN TO YOU WITHOUT THESE LIMITATIONS OF LIABILITY.

The Design is not designed or intended for use in the development of on-line control equipment in hazardous environments requiring fail-safe controls, such as in the operation of nuclear facilities, aircraft navigation or communications systems, air traffic control, life support, or weapons systems (“High-Risk Applications”). Xilinx specifically disclaims any express or implied warranties of fitness for such High-Risk Applications. You represent that use of the Design in such High-Risk Applications is fully at your risk.

© 2006-2008 Xilinx, Inc. All rights reserved. XILINX, the Xilinx logo, and other designated brands included herein are trademarks of Xilinx, Inc. PCI, PCI-X, PCIe, and PCI Express are trademarks or registered trademarks of PCI-SIG. All other trademarks are the property of their respective owners.

Revision History

The following table shows the revision history for this document.

Date	Version	Revision
09/27/06	1.0	Initial Xilinx release.
12/27/06	1.1	Changed device package to FFG1136. Inserted new Table 3-3 showing correlation between PCIe® signals, P13 connector, FPGA pins, and GTP_DUAL tile. Revised Chapter 3, “Hardware Description,” to reflect board design change where ICS874003-02 PCI Express® Clock Jitter attenuator module is now a customer option (added Figure 3-8, and changed Table 3-1, Table 3-9, Table 3-18, Table 3-19, Table 3-20, and “Serial Bus Clocking with Optional ICS874003-02 Clock Jitter Attenuator (PCI Express Operation),” page 60). Removed Appendix A.

Date	Version	Revision
02/27/07	1.2	Changed document title and updated "Additional Documentation," page 7. Specified FPGA device speed grade as "-1C ES". Updated "Initial Board Checks Before Applying Power," page 19. Corrected board reference designator for Table 3-4, page 30 to use P1 as PCI™ Edge Connector pinout. Updated "DDR2 SDRAM SODIMM," page 34 to reference DDR2 reference design included with kit. Added lane assignments to Table 3-20, page 58. Added link to www.idt.com for availability of clock jitter attenuator circuits on page 60. Updated Table 3-33, page 80 to include ML555 support for plugging board into 16-lane add-in card connector. Updated Table 3-37, page 86 to include reference designs pre-loaded into ML555 Platform Flash devices. Add Note 3 to Table 4-1, page 89; Slave SelectMAP not supported. Updated "SelectMAP Clock Selection" including Table 4-7 and Figure 4-8. Added reference to the Development System Reference Guide for PROMGen and BitGen software applications. Updated "Specifying the Xilinx PROM Device" including Figure 4-10 and Figure 4-13. Added Figure 4-14 and Figure 4-15.
06/18/07	1.3	Updated Table 1-1, page 14 to clarify version and build information for PCI and PCI-X IP cores. Revised Serial Bus Development section. Removed "ES" from FPGA part number. Added footnote 3 to Table 3-3, page 27. Updated Figure 3-8, page 55 and Figure 3-9, page 56 to include a 4.7KΩ pull-up resistor on the SATA_MGT_CLKSEL FPGA output and labeled the Clock MUX inputs. Defined the SATA_MGT_CLKSEL default selection in Table 3-19, page 57 for FPGA output H15. Added additional text to footnote 6 in Table 3-20, page 58. Updated "Parallel Mode Operation," page 62 to indicate pressing and releasing of SW9 and SW11 to parallel load clock synthesizers after power on to guarantee clock frequency. Updated Figure 3-14, page 76 and Table 3-34, page 81. Added footnote 1 to Table 4-5, page 95. Updated "Generic Dynamic Reconfiguration," page 98 and "Platform Flash Image Generation and Programming," page 101 to include process steps and screen shots from ISE 9.1i. Inserted two new figures (Figure 4-11, page 105 and Figure 4-12, page 105).

Date	Version	Revision
03/10/08	1.4	Added additional reference documents and application notes in "Additional Documentation," page 7. Added link to ML555 website in "About the Virtex-5 FPGA ML555 Development Kit," page 13. Updated "Serial Bus Development," page 15, including removal of Virtex-5 LogiCORE Endpoint Block Wrapper. Included Platform USB Programming Cable and ISE Evaluation Software in "Kit Contents," page 15. Specified 30 MHz LVCMOS oscillator as one of three on board clock sources in "ML555 Board," page 15. Updated Figure 3-1, page 21 to reflect "as built" 30 MHz LVCMOS oscillator. Added reference and link to Xilinx application notes XAPP1022 and XAPP1002 in "Edge Connector for PCI Express Operation," page 23. Added footnote 6 to Table 3-1, page 24 to identify FPGA connection of PCIE_PERST. Added PCIE_PERST to Table 3-3, page 27. Added reference and link to XAPP999 in "Reference Designs for PCI and PCI-X Operation," page 33. Added reference and links to Xilinx application notes XAPP858 and XAPP865 in "DDR2 SDRAM SODIMM," page 34. Corrected FPGA pin assignments for IIC_SDA_SFP{1/2} and IIC_SCK_SFP{1/2} signals and updated footnotes 2 and 5 in Table 3-7, page 39. Added reference and link to application note XAPP870 in "Serial ATA Interface," page 40. Corrected FPGA pin assignment for P1_RCLK1 signal in Table 3-11, page 43. Added website link to download Silicon Laboratories VCP device drivers in the "USB to UART Bridge," page 51. Specify 30 MHz oscillator frequency for component Y2 in Table 3-18, page 53. Changed signal name for FPGA GCLK input pin L19 to FPGA_GCLK_30MHZ in Figure 3-8, page 55, Figure 3-9, page 56, and Table 3-19, page 57. Changed signal name for FPGA GCLK input pin AD32 to FPGA_GCLK_30MHZ in Table 3-26, page 70. Added footnote to Table 3-37, page 86. Updated footnote 3 in Table 4-1, page 89 to recommend Master SelectMAP configuration of the ML555. Changed CPLD CLK to 30 MHz in Figure 4-5, page 92, Figure 4-6, page 98, and Figure 4-7, page 99 as well as Table 4-4, page 94. Changed oscillator Y2 frequency to 30 MHz in Figure 4-8, page 100. Added footnote to Table 4-7, page 100 concerning CCLK configuration frequency recommendation. Added BitGen command sequence to demonstrate selection of 20 MHz CCLK configuration clock in "Platform Flash Image Generation and Programming," page 101.

Table of Contents

Preface: About This Guide

Guide Contents . . . 7
Additional Documentation . . . 7
Additional Support Resources . . . 9
Typographical Conventions . . . 10
Online Document . . . 11

Chapter 1: Introduction

About the Virtex-5 FPGA ML555 Development Kit . . . 13
Parallel Bus Development for PCI Operation . . . 13
Serial Bus Development . . . 15
Kit Contents . . . 15
ML555 Board . . . 15
Available Xilinx Accessories . . . 16
Conversion Module, SMA to SATA (HW-AFX-SMA-SATA) . . . 16
Conversion Module, SMA to RJ45 (HW-AFX-SMA-RJ45) . . . 16
Conversion Module, SMA to HSSDC2 (HW-AFX-SMA-HSSDC2) . . . 17
PHY Daughtercard (HW-AFX-BERG-EPHY) . . . 17

Chapter 2: Getting Started

Documentation and Reference Design CD . . . 19
Initial Board Checks Before Applying Power . . . 19

Chapter 3: Hardware Description

Edge Connector for PCI Express Operation . . . 23
64-bit Edge Connector for PCI Operation . . . 29
ML555 Configuration Headers for PCI Operation . . . 33
M66EN - 66 MHz Enable (Connector P9) . . . 33
PME# - Power Management Event (Connector P7) . . . 33
PCIXCAP - PCI-X Capability (Connector P8) . . . 33
Reference Designs for PCI and PCI-X Operation . . . 33
DDR2 SDRAM SODIMM . . . 34
Small Form-factor Pluggable (SFP) Module Interface . . . 39
Serial ATA Interface . . . 40
SMA Connectors . . . 41
Ethernet PHY Daughtercard Support . . . 41
LVDS Interface . . . 44
SAMTEC Mezzanine Expansion Card Support . . . 50
Universal Serial Bus Port . . . 50
USB to UART Bridge . . . 51
Clock Generation . . . 52
Global Clock Inputs . . . 57

GTP Reference Clock Inputs . . . 58
Parallel Bus Clocking (PCI Operation) . . . 59
Serial Bus Clocking with Optional ICS874003-02 Clock Jitter Attenuator (PCI Express Operation) . . . 60
Clock Synthesizers . . . 61
Parallel Mode Operation . . . 62
Serial Mode Operation . . . 68
Clock-Capable I/O Pins Associated with Clock Inputs . . . 70
IDELAYCTRL Reference Clock Generation . . . 72
User LEDs . . . 73
Configuration INIT and DONE LEDs . . . 73
User Pushbutton Switches . . . 74
Pushbutton Program Switch (SW6) . . . 74
Pushbutton Reset Switch (SW7) . . . 74
Power Consumption . . . 74
Voltage Regulators . . . 75
ML555 DC Power System . . . 75
PCI and/or PCI-X Application Add-in Card Power Input . . . 79
Add-in Card DC Power Input (PCI Express Operation) . . . 80
ML555 Board DC Power Regulators . . . 80
GTP Transceiver Power . . . 82
DDR2 SODIMM Power . . . 82
Power Supply Monitoring . . . 82
ML555 Board Physical Dimensions . . . 85
XC2C32 CoolRunner-II CPLD U6 . . . 85
XCF32PFS48C Platform Flash U1 and U15 . . . 86

Chapter 4: Configuration

Configuration Modes . . . 89
JTAG Chain . . . 89
JTAG Port . . . 90
SelectMAP Interface . . . 91
CPLD Programming Examples . . . 97
Static Configuration . . . 97
Generic Dynamic Reconfiguration . . . 98
SelectMAP Clock Selection . . . 100
Platform Flash Image Generation and Programming . . . 101
Setup . . . 101
Creating a PROM File in Command Line Mode . . . 101
iMPACT and PROMGEN Wizard GUI Mode . . . 101
Specifying the Xilinx PROM Device . . . 103
Programming the PROM . . . 104

About This Guide

This user guide is a description of the Virtex™-5 FPGA ML555 Development Kit for PCI™ and PCI Express® designs. Complete and up-to-date documentation of the Virtex-5 family of FPGAs is available on the Xilinx website at http://www.xilinx.com/virtex5.

Guide Contents

This manual contains the following chapters:

- Chapter 1, "Introduction"
- Chapter 2, "Getting Started"
- Chapter 3, "Hardware Description"
- Chapter 4, "Configuration"

Additional Documentation

The following documents are also available for download at http://www.xilinx.com/virtex5.

- Virtex-5 Family Overview

  The features and product selection of the Virtex-5 family are outlined in this overview.
- Virtex-5 Data Sheet: DC and Switching Characteristics

  This data sheet contains the DC and Switching Characteristic specifications for the Virtex-5 family.
- Virtex-5 FPGA User Guide

  This user guide includes chapters on:
  - Clocking Resources
  - Clock Management Technology (CMT)
  - Phase-Locked Loops (PLLs)
  - Block RAM and FIFO memory
  - Configurable Logic Blocks (CLBs)
  - SelectIO™ Resources
  - I/O Logic Resources
  - Advanced I/O Logic Resources

- Virtex-5 FPGA RocketIO GTP Transceiver User Guide

  This user guide describes the RocketIO™ GTP transceivers available in the Virtex-5 LXT and SXT platform devices.

- Virtex-5 FPGA Embedded Tri-Mode Ethernet MAC User Guide

  This user guide describes the dedicated Tri-Mode Ethernet Media Access Controller available in the Virtex-5 LXT and SXT platform devices.

- Virtex-5 Integrated Endpoint Block User Guide for PCI Express Designs

  This user guide describes the integrated Endpoint blocks in the Virtex-5 LXT and SXT platform devices for PCI Express® designs.

- Virtex-5 FPGA XtremeDSP Design Considerations

  This guide describes the XtremeDSP™ slice and includes reference designs for using the DSP48E.

- Virtex-5 FPGA Configuration Guide

  This all-encompassing configuration guide includes chapters on configuration interfaces (serial and SelectMAP), bitstream encryption, Boundary-Scan and JTAG configuration, reconfiguration techniques, and readback through the SelectMAP and JTAG interfaces.

- Virtex-5 FPGA System Monitor User Guide

  The System Monitor functionality available in all the Virtex-5 devices is outlined in this guide.

- Virtex-5 FPGA Packaging Specifications

  This specification includes the tables for device/package combinations and maximum I/Os, pin definitions, pinout tables, pinout diagrams, mechanical drawings, and thermal specifications.

- Virtex-5 PCB Designer's Guide

  This guide provides information on PCB design for Virtex-5 devices, with a focus on strategies for making design decisions at the PCB and interface level.

The following documents provide supplemental material useful to this user guide:

1. DS090, *CoolRunner-II CPLD Family*
2. DS123, *Platform Flash In-System Programmable Configuration PROMs*
3. UG065, *PHY Daughter Card User Guide*
4. XAPP938, *Dynamic Bus Mode Reconfiguration of PCI-X and PCI Designs*
5. XAPP1022, *Using the Memory Endpoint Test Driver (MET) with the Programmed Input/Output Example Design for PCI Express Endpoint Cores*
6. XAPP1002, *Using ChipScope Pro to Debug Endpoint Block Plus Wrapper, Endpoint, and Endpoint PIPE Designs for PCI Express*
7. XAPP999, *Reference System: PLBv46 PCI Using the ML555 Embedded Development Platform*
8. XAPP858, *High-Performance DDR2 SDRAM Interface in Virtex-5 Devices*
9. XAPP865, *Hardware Accelerator for RAID6 Parity Generation / Data Recovery Controller with ECC and MIG DDR2 Controller*
10. UG086, *Xilinx Memory Interface Generator (MIG) User Guide*
11. XAPP870, *Serial ATA Physical Link Initialization with the GTP Transceiver of Virtex-5 LXT FPGAs*

12. XAPP693, *A CPLD-Based Configuration and Revision Manager for Xilinx Platform Flash PROMs and FPGAs*

The Endpoint Block Plus for PCI Express solution from Xilinx is a reliable, high-bandwidth, scalable serial interconnect building block for use with the Virtex-5 LXT and SXT platform FPGAs. The core instantiates the Virtex-5 FPGA Integrated Block for PCI Express designs found in the Virtex-5 LXT and SXT devices. The Endpoint Block Plus core is a Xilinx CORE Generator™ IP core included in the latest IP Update on the Xilinx IP Center. Included with the Xilinx IP are a data sheet, a getting started guide, and a user guide. These documents are generated by the CORE Generator tool when starting a design project. The documents can be downloaded from the Xilinx website at:

http://www.xilinx.com/support/documentation/ip_documentation/pcie_blk_plus_ds551.pdf

http://www.xilinx.com/support/documentation/ip_documentation/pcie_blk_plus_gsg343.pdf

http://www.xilinx.com/support/documentation/ip_documentation/pcie_blk_plus_ug341.pdf

Additional technical information on PCI Express solutions is available at:

http://www.xilinx.com/pciexpress

Xilinx provides customizable LogiCORE™ Initiator/Target cores for PCI and PCI-X applications designed to work with Virtex-5 FPGAs. Included with the Xilinx IP are a data sheet, getting started guide, and user guide. These documents are generated by the CORE Generator tool when starting a design project. Additional information is available on the Xilinx website at:

http://www.xilinx.com/products/design_resources/conn_central/protocols/pci_pcix.htm

PCI, PCI-X™, and PCI Express specifications are available from the PCI Special Interest Group (PCISIG). Contact the PCI Special Interest Group office to obtain the latest revision of these specifications. Questions regarding the PCI Local Bus Specification or the PCI-X Addendum or membership in the PCI Special Interest Group can be forwarded through:

PCI Special Interest Group (PCI-SIG)
5440 SW Westgate Dr., #217
Portland, OR 97221

Phone: 800-433-5177 (inside the U.S.), 503-291-2569 (outside the U.S.)
Fax: 503-297-1090
e-mail: administration@pcisig.com

Website: http://www.pcisig.com

- PCI Local Bus Specification, Revision 3.0
- PCI-X Addendum to the PCI Local Bus Specification
- PCI Express Base Specification
- PCI Express Card Electromechanical Specification

Additional Support Resources

To search the database of silicon and software questions and answers, or to create a technical support case in WebCase, see the Xilinx website at: http://www.xilinx.com/support.

Typographical Conventions

This document uses the following typographical conventions. An example illustrates each convention.

Convention	Meaning or Use	Example
Italic font	References to other documents	See the *Virtex-5 FPGA Configuration Guide* for more information.
	Emphasis in text	The address (F) is asserted *after* clock event 2.
Underlined Text	Indicates a link to a web page.	http://www.xilinx.com/virtex5

Online Document

The following conventions are used in this document:

Convention	Meaning or Use	Example
Blue text	Cross-reference link to a location in the current document	See the section "Additional Documentation" for details. Refer to "Clock Management Technology (CMT)" in Chapter 2 for details.
Red text	Cross-reference link to a location in another document	See Figure 5 in the *Virtex-5 FPGA Data Sheet*
Blue, underlined text	Hyperlink to a website (URL)	Go to http://www.xilinx.com for the latest documentation.

Chapter 1

Introduction

About the Virtex-5 FPGA ML555 Development Kit

To develop parallel Peripheral Component Interconnect (PCI™) bus and serial PCI Express® bus add-in card applications, the Virtex™-5 FPGA ML555 board is configured and then plugged into a parallel PCI bus system unit or a serial PCI Express system unit. The board supports 32-bit or 64-bit PCI bus datapaths. The ML555 board has an eight-lane connector that allows the board to be plugged into an eight-lane add-in card socket for PCI Express operation. The ML555 kit does not include a lane conversion adapter, which would allow the eight-lane ML555 board to plug into an add-in card socket for single-lane PCI Express operation.

Additional information and design resources associated with the ML555 development kit is available at:

http://www.xilinx.com/products/devkits/HW-V5-ML555-G.htm

Parallel Bus Development for PCI Operation

This Virtex-5 FPGA based kit provides a development platform for designing and verifying PCI and PCI-X™ applications utilizing Xilinx LogiCORE™ intellectual property (IP) cores in a 3.3V signaling environment. The ML555 board is intended to plug-in to a 3.3V keyed system board. The ML555 board is not a Universal add-in card nor is it intended to plug into a 5V keyed system board. Figure 1-1 shows how to identify a 3.3V system board slot (left side) from a non-supported 5V system board slot (right side).

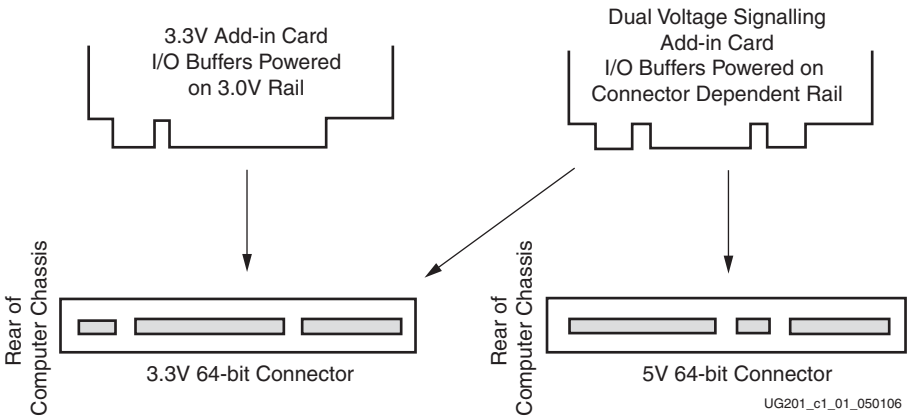

Figure 1-1: **Add-in Card Connectors**

The ML555 board is supported by Xilinx LogiCORE IP versions 4 and 6, respectively. Each core has a primary version number, shown in Table 1-1, followed by a revision or build number. More information about the current versions of these cores is available in the LogiCORE data sheets for the PCI and PCI-X section of the PCI/PCI-X product lounge (refer to http://www.xilinx.com/products/logicore/lounge/lounge.htm). Table 1-1 lists the Xilinx cores for PCI and PCI-X operation.

Table 1-1: **Xilinx Cores Supporting PCI and PCI-X Operation**

Version	Bus Mode	Bus Width	Clock Frequency	Clock Type (FPGA Pin #)
v4	PCI	32 bits	33 MHz	Global (J14)
v4	PCI	32 bits	66 MHz	Global (J14)
v4	PCI	64 bits	33 MHz	Global (J14)
v6	PCI-X	64 bits	133 MHz	Global (J14)
v6	PCI-X	64 bits	100 MHz	Global (J14)
v6	PCI-X	64 bits	66 MHz	Global (J14)
v6	PCI	64 bits	33 MHz	Global (J14)

These Xilinx interface cores are pre-implemented and fully tested modules for Xilinx FPGAs.

The v4 64-bit interface is compliant with the PCI Local Bus Specification, revision 3.0. The v6 64-bit interface is compliant with the PCI Local Bus Specification, revision 3.0, and the PCI-X Addendum, revision 2.0.

The pinout for each Virtex-5 device and the relative placement of the internal logic are predefined. Critical paths are controlled by constraints to ensure predictable timing, significantly reducing the engineering time required to implement the bus interface portion of a user design. When targeting an XC5VLX50T-FFG1136 FPGA, the Xilinx CORE Generator™ tool provides an example design and a constraints file utilizing the ML555 board pinout for PCI and PCI-X designs.

Resources can instead be focused on unique user application logic in the FPGA and on the system-level design. As a result, the Xilinx interface products for PCI and PCI-X operation minimize product development time.

The following links provide more information:

- Xilinx LogiCORE products:
  www.xilinx.com/products/design_resources/conn_central/index.htm
- PCI and PCI-X specific applications:
  www.xilinx.com/products/design_resources/conn_central/protocols/pci_pcix.htm

Included with the purchase of the ML555 development kit is a 90-day access to full system hardware evaluation versions of the Virtex-5 FPGA LogiCORE products for PCI and PCI-X designs. The following link provides additional information specific to the ML555 board and LogiCORE products:

www.xilinx.com/ipcenter/ml555/ml555_eval_instr.htm

Serial Bus Development

The ML555 board is supported by a LogiCORE endpoint wrapper to configure the Integrated Endpoint Block for PCI Express operation in Virtex-5 LXT and SXT FPGAs:

- *Virtex-5 FPGA LogiCORE Endpoint Block Plus Wrapper for PCI Express designs*

  This is the recommended wrapper for PCI Express designs. It provides many ease-of-use features and optimal configuration for Endpoint applications while simplifying the design process and reducing the time-to-market.

The endpoint solution is delivered through the Xilinx CORE Generator tool. Full access to the core, including bitstream generation capability, can be obtained through registration at no extra charge.

Additional technical information on Xilinx PCI Express solutions is available at:

www.xilinx.com/pciexpress

Refer to UG197, *Virtex-5 Integrated Endpoint Block User Guide for PCI Express Designs* for more information on the integrated Endpoint solution.

Kit Contents

The ML555 board kit includes the following:

- Virtex-5 FPGA ML555 board (XC5VLX50T-FFG1136C-1 speed grade FPGA)
- Documentation and reference design CD
- Time-out evaluation licenses for the LogiCORE IP for PCI and PCI-X designs
- Drivers for Jungo Software Technologies WinDriver device driver development kit can be downloaded from www.jungo.com/dnload.html and evaluated for 60 days
- Xilinx Platform Cable USB programming cable
- ISE™ evaluation software

For assistance with any of these items, contact your local Xilinx distributor or visit the Xilinx online store at www.xilinx.com.

The heart of the kit is the ML555 board. This manual provides comprehensive information on this board.

ML555 Board

The ML555 board includes the following:

- XC5VLX50T-FFG1136C -1 speed grade FPGA
- 200-pin 1.8V SODIMM socket with 256 MB (32M x 64 bit) DDR2 SDRAM SODIMM
- Three on-board clock sources, two differential SMA clock inputs, and two programmable clock synthesizers:
  - 30 MHz LVCMOS
  - 125 and 200 MHz Epson 2.5V EG-2121CA LVDS and LVPECL, respectively
- One Universal Serial Bus (USB) 2.0 port (USB interface cable not provided)
- Support for up to four FPGA design images in two Xilinx XCF32P-FSG48C Platform Flash configuration PROM devices
- Static or dynamic device reconfiguration support with the XC2C32 CoolRunner™ II CPLD

- 64-bit 3.3V system board keyed connector for PCI or PCI-X operation
- Support for Endpoint designs in x1, x4, and x8 lane configurations
- Two Small Form-factor Pluggable (SFP) Transceiver module ports (SFP modules are not included)
- Xilinx Generic Interface (XGI) headers support installation of Xilinx Ethernet PHY daughtercard (sold separately) for 10/100/1000 Mb Ethernet connectivity
- Two SAMTEC LVDS interface connectors with up to 24 high-speed LVDS channels each (cables sold separately)
- One Serial ATA (SATA) disk drive interface connector (SATA cable not provided)
- One set of SMA ports for offboard GTP transceiver connectivity
- User pushbutton switches and LEDs
- Device configuration through on-board Platform Flash or Xilinx Platform Cable USB
- PCI clocking support for global and regional clocking applications
- On-board power regulators (3.0V PCI, 2.5V, 1.8V, 1.0V, 0.9V V_{TT})
- Two programmable clock synthesizer chips to support DDR2 memory interfaces, 10/100/1000 Mb Ethernet protocols, SATA, Fibre Channel, Aurora, and other serial GTP baud rates

Available Xilinx Accessories

The ML555 board has one set of SMA connectors connected to one of the GTP transceiver ports of the XC5VLX50T FPGA. Xilinx sells a number of SMA conversion module boards that permit the conversion of the on-board SMA interface to other popular multi-gigabit serial connector interfaces. These accessories boards are available through your local Xilinx Sales office.

Xilinx also provides an Ethernet PHY daughtercard that can be used to provide dual Ethernet connectivity to the ML555 development kit.

Note: Not all accessories are RoHS compliant, and they might not be available in all countries. Contact your local Xilinx Sales office to determine product availability.

Conversion Module, SMA to SATA (HW-AFX-SMA-SATA)

The SMA to SATA module can be used in conjunction with the ML555 SMA connectors. The ML555 only provides one set of SMA connectors, whereas the HW-AFX-SMA-SATA conversion module contains two sets of SMA connectors and two SATA connectors. DC power is not provided to the SATA disk drive from either the ML555 board or the conversion module.

The SMA to SATA conversion module can be ordered from Xilinx as part number HW-AFX-SMA-SATA. Contact your local sales office for pricing information. Additional information on the conversion module is available from the Xilinx website at:

www.xilinx.com/xlnx/xebiz/designResources/ip_product_details.jsp?key=HW-AFX-SMA-SATA

Conversion Module, SMA to RJ45 (HW-AFX-SMA-RJ45)

The SMA to RJ45 module can be used in conjunction with the ML555 SMA connectors to convert the SMA interface to a RJ45 interface. This adapter does not support 10/100/1000BASE-T applications.

The SMA to RJ45 conversion module can be ordered from Xilinx as part number HW-AFX-SMA-RJ45. Contact your local sales office for pricing information. Additional information on the conversion module is available from the Xilinx website at:

www.xilinx.com/xlnx/xebiz/designResources/ip_product_details.jsp?key=HW-AFX-SMA-RJ45

Conversion Module, SMA to HSSDC2 (HW-AFX-SMA-HSSDC2)

The SMA to HSSDC2 module can be used in conjunction with the ML555 SMA connectors to convert the SMA interface to a HSSDC2 interface.

The SMA to HSSDC2 conversion module can be ordered from Xilinx as part number HW-AFX-SMA-HSSDC2. Contact your local sales office for pricing information. Additional information on the conversion module is available from the Xilinx website at:

www.xilinx.com/xlnx/xebiz/designResources/ip_product_details.jsp?key=HW-AFX-SMA-HSSDC2

PHY Daughtercard (HW-AFX-BERG-EPHY)

The PHY daughtercard plugs into the XGI headers on the ML555 board. The PHY daughtercard provides Ethernet capability to the ML555 development platform by using two Marvel Alaska 88E1111 Gigabit over copper transceivers. These PHY devices perform all physical layer (PHY) functions, operate at 10/100/1000 Mb/s and support many interfaces of the embedded tri-mode Ethernet MAC in the Virtex-5 FPGA.

The PHY daughtercard can be ordered from Xilinx as part number HW-AFX-BERG-EPHY. Contact your local sales office for pricing information. Additional information on the PHY daughtercard is available from the Xilinx website at:

www.xilinx.com/xlnx/xebiz/designResources/ip_product_details.jsp?key=HW-AFX-BERG-EPHY

Chapter 2

Getting Started

This chapter describes the items needed to configure the Virtex-5 FPGA ML555 board. The ML555 board is tested prior to shipment and should work out of the box. The installer is recommended to inspect the board prior to use and confirm proper jumper and switch settings as directed in this user guide.

The ML555 board must be plugged into either a parallel bus expansion slot for PCI systems or a serial system bus expansion slot for PCI Express systems. The DC power provided to the ML555 board from the PCI Express and PCI buses is different. The ML555 system power configuration must be properly configured through board headers and shunts prior to plugging into the system unit. Failure to configure the ML555 DC power system might result in damage to the ML555 board or the system unit.

Contact Xilinx Technical Support with any questions about proper configuration of the ML555 prior to powering up a system at:

http://www.xilinx.com/support/clearexpress/websupport.htm

Documentation and Reference Design CD

The CD included in the Virtex-5 FPGA ML555 board kit contains the board design files, including schematics, PCB layout, and bill of materials. FPGA and CPLD design constraint files are included on the CD. This file provides a signal listing and physical FPGA pin locations (LOC) constraint to get started designing user applications with the Xilinx ISE software. Signal names can be changed to match user preferences if the board schematic signal names are not identical to the top-level user design file names. Open the `ReadMe.txt` file on the CD to review the list of contents.

Initial Board Checks Before Applying Power

Note: These steps **MUST** be performed before plugging in the ML555 board:

1. Set up the Configuration Mode Switch SW5 for Master SelectMAP. See Table 4-1, page 89 and Figure 4-2, page 89.
2. Configure Jumper Block P2 to select configuration CCLK source (FPGA). See Table 4-7, page 100 and Figure 4-8, page 100.
3. Configure Jumper Block P3 to select one of four Platform Flash configuration files or use JTAG programming cable to load user design. See Table 3-37, page 86.
4. Switch SW8: selects the FPGA V_{CCINT} source (PCI or PCI Express bus) as described in "ML555 DC Power System," page 75.
5. Jumper Block P18: enables the 12V to 5V enable for PCI Express operation as described in "ML555 DC Power System," page 75.

The ML555 board now can be plugged into a powered down 3.3V (only) add-in card slot for PCI Express or PCI/PCI-X operation. See the `cd_rom.txt` file on the CD.

Chapter 3

Hardware Description

A high-level block diagram of the Virtex-5 FPGA ML555 board is shown in Figure 3-1, followed by a brief description of each board section. Figure 3-2 is a photograph of the ML555 board with the key interfaces marked.

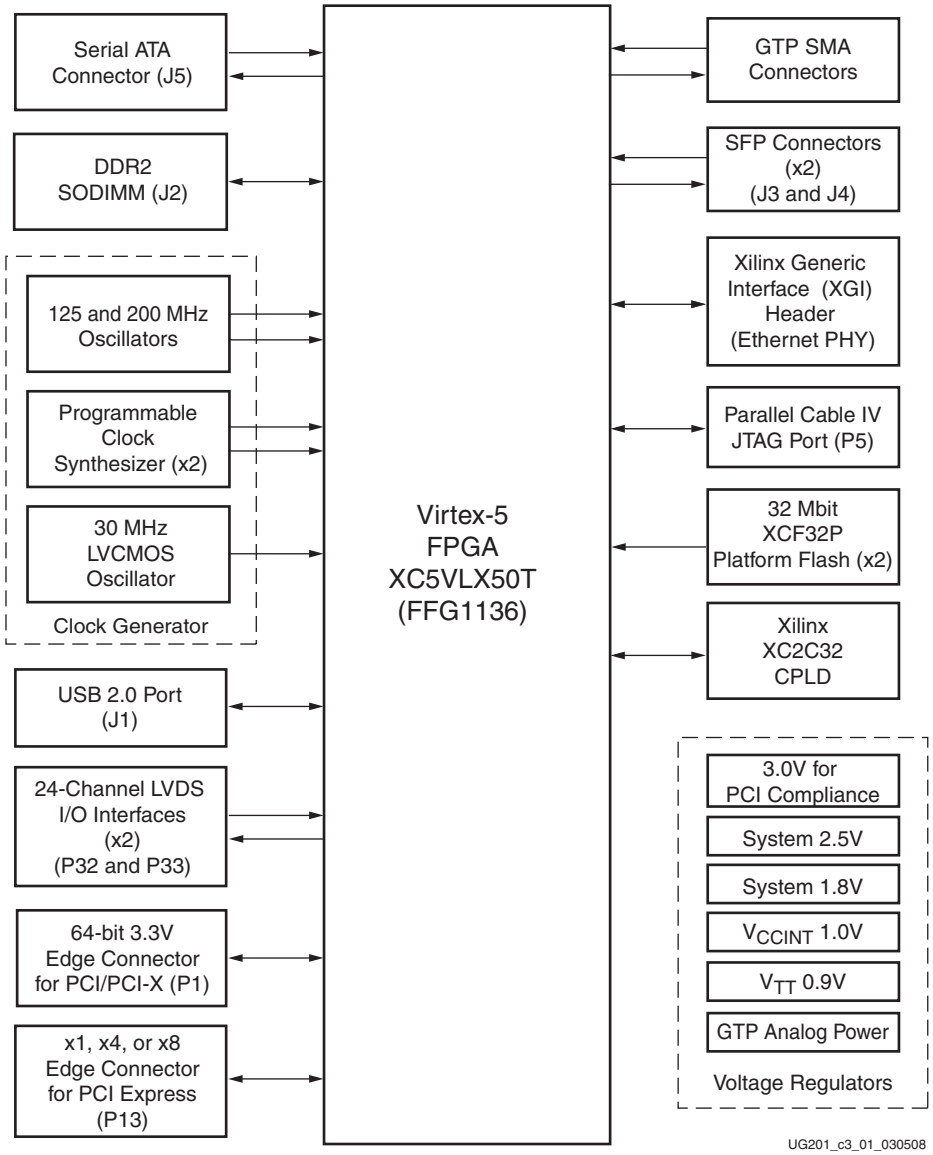

Figure 3-1: **ML555 Board Block Diagram**

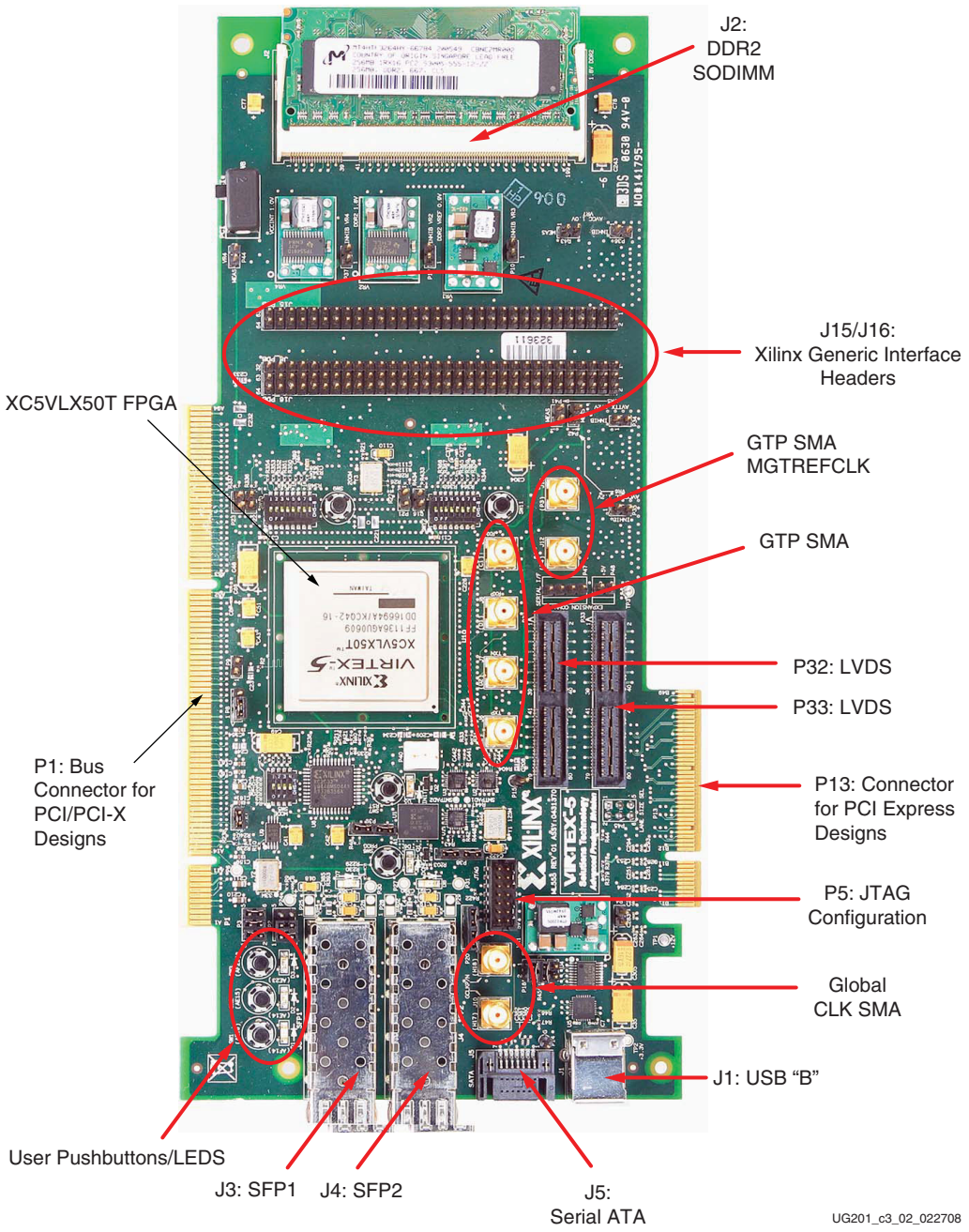

Figure 3-2: **Annotated ML555 Board**

The CD included in the kit contains ML555 board schematics and layout files.

Edge Connector for PCI Express Operation

Caution! PCI and PCI Express system units provide different DC voltages to the add-in card connectors. Before plugging the ML555 board into the system unit, the power configuration header settings must be reviewed to verify that the board will be powered properly. Failure to configure the power system properly could result in damage to the system unit or the ML555 board. Refer to Figure 3-16, page 78 to see how the SW8 switch and the P18 connector are configured for PCI Express power.

Figure 3-3 shows the location of the edge connector and power management headers for PCI Express systems.

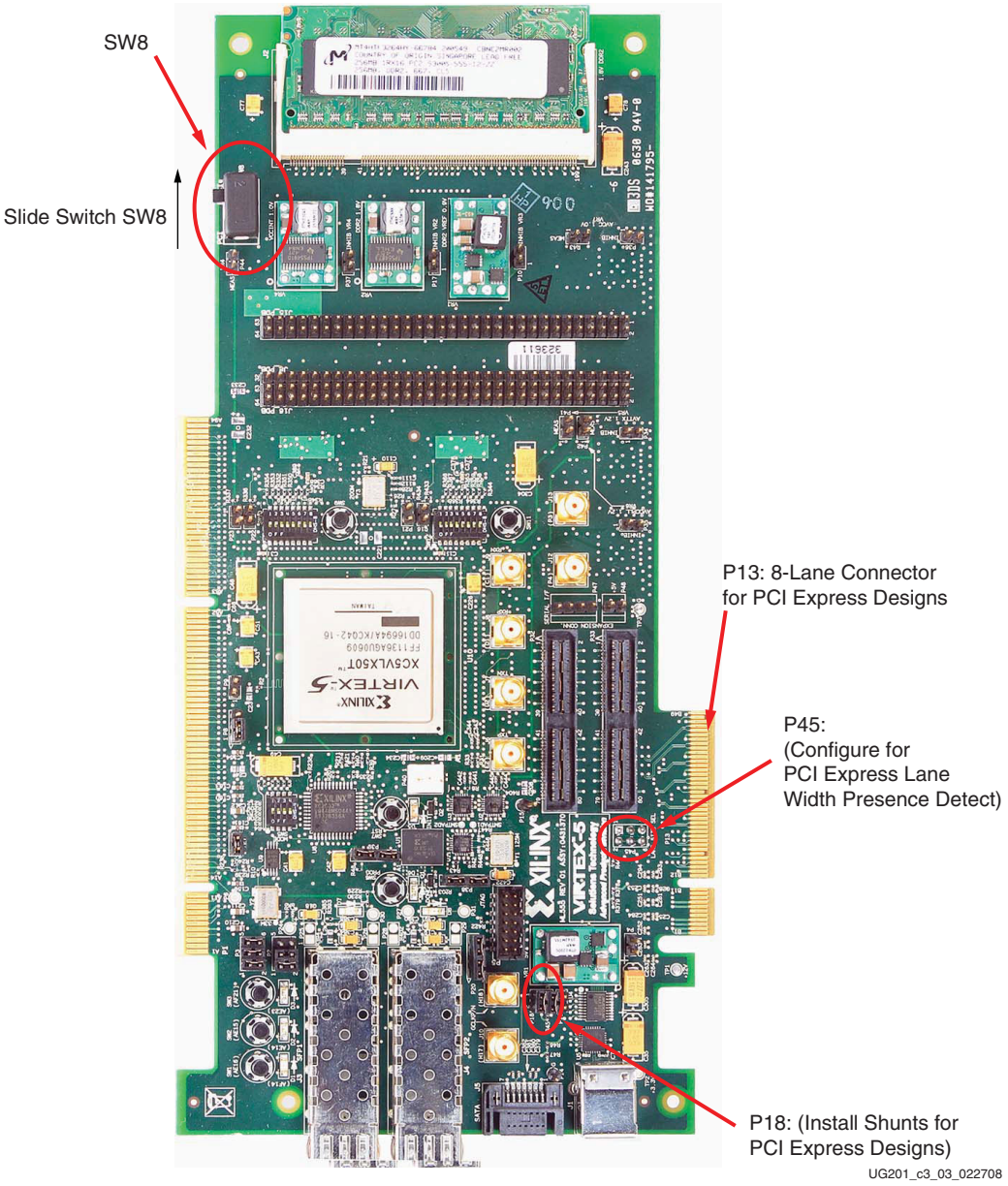

Figure 3-3: **Connector and Power Management Headers for PCI Express Designs**

Table 3-1 shows the connector pin assignment for PCI Express designs. The board supports x1, x4, and x8 endpoint designs. The ML555 board is an endpoint add-in card. Port names are with respect to the system board host.

Table 3-1: **P13 Edge Connector Socket Pinout for PCI Express Designs**

P13 A Side	Signal	P13 B Side	Signal
A1	PCIE_PRSNT1_B(1)	B1	+12 VOLTS
A2	+12 VOLTS	B2	+12 VOLTS
A3	+12 VOLTS	B3	+12 VOLTS
A4	GND	B4	GND
A5	JTAG_TCK(2)	B5	SMCLK(2)
A6	JTAG_TDI(2)	B6	SMDAT(2)
A7	JTAG_TDO(2)	B7	GND
A8	JTAG_TMS(2)	B8	+3.3 VOLTS
A9	+3.3 VOLTS	B9	JTAG_TRST_B(2)
A10	+3.3 VOLTS	B10	+3.3 VOLTSAUX(2)
A11	PCIE_PERST(6)	B11	PCIE_WAKE_B(2)
	KEY		KEY
A12	GND	B12	RESERVED
A13	PCIE_REFCLKP(3)	B13	GND
A14	PCIE_REFCLKN(3)	B14	PETP0(4)
A15	GND	B15	PETN0(4)
A16	PERP0(5)	B16	GND
A17	PERN0(5)	B17	PCIE_PRSNT2_B(1)
A18	GND	B18	GND
A19	RESERVED	B19	PETP1
A20	GND	B20	PETN1
A21	PERP1	B21	GND
A22	PERN1	B22	GND
A23	GND	B23	PETP2
A24	GND	B24	PETN2
A25	PERP2	B25	GND
A26	PERN2	B26	GND
A27	GND	B27	PETP3
A28	GND	B28	PETN3
A29	PERP3	B29	GND

Table 3-1: **P13 Edge Connector Socket Pinout for PCI Express Designs *(Continued)***

P13 A Side	Signal	P13 B Side	Signal
A30	PERN3	B30	RESERVED
A31	GND	B31	PCIE_PRSNT2_B(1)
A32	RESERVED	B32	GND
A33	RESERVED	B33	PETP4
A34	GND	B34	PETN4
A35	PERP4	B35	GND
A36	PERN4	B36	GND
A37	GND	B37	PETP5
A38	GND	B38	PETN5
A39	PERP5	B39	GND
A40	PERN5	B40	GND
A41	GND	B41	PETP6
A42	GND	B42	PETN6
A43	PERP6	B43	GND
A44	PERN6	B44	GND
A45	GND	B45	PETP7
A46	GND	B46	PETN7
A47	PERP7	B47	GND
A48	PERN7	B48	PCIE_PRSNT2_B(1)
A49	GND	B49	GND

Notes:

1. PCIE_PRSNT1_B can be connected to one of three PCIE_PRSNT2_B signals by connecting a shunt on connector P45. See Table 3-2 for application information.
2. No connect on the ML555 board.
3. The ML555 board layout provides two methods of interfacing the PCIE_REFCLK to the FPGA. The default method is to AC couple the 100 MHz PCIE_REFCLK directly to the GTP_DUAL tile X0Y2 MGTREFCLK input pins. An alternative method is to remove two 0Ω resistors and install an ICS874003-02 PCI Express Jitter attenuator module, which provides a 100, 125, or 250 MHz reference clock to the GTP transceiver. The jitter attentuator has two LVDS outputs that connect to the GTP and FPGA global clock inputs. One of the jitter attentuator LVDS outputs is connected to the MGTREFCLK inputs of GTP_DUAL tile X0Y2 for PCI Express lanes 0 and 1. The PCIE_REFCLK is also connected to the FPGA global clock network on pins J16 and J17. Internal FPGA clock buffers distribute this clock to other GTP_DUAL tiles for PCI Express operation. The architecture of the FPGA permits an external MGTREFCLK to be driven a maximum of three GTP_DUAL tiles up or down. See "Serial Bus Clocking with Optional ICS874003-02 Clock Jitter Attenuator (PCI Express Operation)," page 60 for additional information.
4. The PETPX and PETNX pins connect to the PCI Express transmitter differential pair on the system board and the PCI Express receiver on the add-in card.
5. The PERPX and PERNX pins connect to the PCI Express receiver differential pair on the system board and the PCI Express transmitter on the add-in card.
6. PCIE_PERST connects to FPGA pin AE14.

The PCI Express Card Electromechanical Specification requires add-in cards to implement variable-length edge finger pads and tie PRSNT1_B and PRSNT2_B signals together on the

add-in card. More than one PRSNT2_B pin is defined in the x4, x8, and x16 PCI Express connectors; these are necessary to support *up-plugging* of the add-in card. Up-plugging is defined as plugging a smaller link card into a larger link connector. The ML555 board can be plugged into x8 or x16 lane link connectors.

Prior to installation in the PCI Express system unit, connector P45 must be configured to indicate the number of PCI Express lanes used in the design, as shown in Table 3-2.

Table 3-2: **Presence Detect Configuration Header for PCI Express Designs (P45)**

Number of Active Lanes in Design	Shunt Position on Connector P45	Physical Connection at Connector P13	
		PRSNT1_B(1)	PRSNT2_B
1	Install shunt on connector P45 pins 5 - 6	P13-A1	P13-B17
4	Install shunt on connector P45 pins 3 - 4	P13-A1	P13-B31
8	Install shunt on connector P45 pins 1 - 2	P13-A1	P13-B48

Notes:

1. P45 pins 2, 4, and 6 are all connected to PCIE_PRSNT1_B on connector P13 pin A1.
2. See Figure 3-3, page 23 for the location of configuration header P45.

Downshifting is defined as plugging an add-in card into a connector that is not fully routed for all of the lanes. In general, downshifting is not allowed and is physically prevented. An exception is the x8 connector, in which the system designer can choose to route only the first four lanes; a x8 lane card must function as a x4 lane card in this scenario. The ML555 board can be used as either a x4 or a x8 lane card depending upon the user design loaded into the FPGA.

For development purposes, several companies offer x16 to x1 adapters that permit plugging multilane add-in cards into single lane PCI Express system unit connectors. The adapter is not provided with the ML555 development kit.

Table 3-3 shows the correlation between PCI Express signals, P13 add-in card pin, FPGA pins, and GTP_DUAL tile location assignments.

Table 3-3: **PCI Express Signals, Add-in Card Connector Pin, and FPGA Pins per GTP_DUAL Tile**

PCI Express Signal Name(1)	Add-in Card Connector P13 Pin	FPGA Pin(2)	GTP_DUAL Tile(3)
PCIE_REFCLK_P	A13	Y4	X0Y2
PCIE_REFCLK_N	A14	Y3	
PETP0	B14	W1	
PETN0	B15	Y1	
PERP0	A16	V2	
PERN0	A17	W2	
PETP1	B19	AB1	
PETN1	B20	AA1	
PERP1	A21	AC2	
PERN1	A22	AB2	
PETP2	B23	AE1	X0Y1
PETN2	B24	AF1	
PERP2	A25	AD2	
PERN2	A26	AE2	
PETP3	B27	AH1	
PETN3	B28	AG1	
PERP3	A29	AJ2	
PERN3	A30	AH2	
PETP4	B33	N1	X0Y3
PETN4	B34	P1	
PERP4	A35	M2	
PERN4	A36	N2	
PETP5	B37	T1	
PETN5	B38	R1	
PERP5	A39	U2	
PERN5	A40	T2	

Table 3-3: **PCI Express Signals, Add-in Card Connector Pin, and FPGA Pins per GTP_DUAL Tile**

PCI Express Signal Name(1)	Add-in Card Connector P13 Pin	FPGA Pin(2)	GTP_DUAL Tile(3)
PETP6	B41	AL1	X0Y0
PETN6	B42	AM1	
PERP6	A43	AK2	
PERN6	A44	AL2	
PETP7	B45	AP3	
PETN7	B46	AP2	
PERP7	A47	AN4	
PERN7	A48	AN3	
PCIE_PERST	A11	AE14	Not Applicable

Notes:

1. Signal names are with respect to the add-in card connector slot nomenclature. PETPx and PETNx connect to the endpoint port GTP receiver differential pairs. PERPx and PERNx connect to the endpoint port GTP transmitter differential pairs. Port names at the connector are with respect to the downstream transmitter and receiver ports. The downstream transmitter/receiver ports connect to the upstream receiver/transmitter ports, respectively.
2. The PCIE_REFCLK and PERNx differential signals are AC coupled with a 0.1 µF capacitor.
3. Dedicated GTP_DUAL tile assignments are required for 8-lane PCI Express Endpoint interfaces with ES silicon. Production silicon removes GTP_DUAL tile assignment restrictions.

See XAPP1022 [Ref 5] and XAPP1022 [Ref 6] for examples of how to get started designing and debugging PCI Express endpoint applications using the Integrated Endpoint Block for PCI Express designs available in Virtex-5 LXT FPGAs.

64-bit Edge Connector for PCI Operation

Caution! PCI and PCI Express system units provide different DC voltages to the add-in card connectors. Before plugging the ML555 board into the system unit, the power configuration header settings must be reviewed to verify that the board will be powered properly. Failure to configure the power system properly could result in damage to the system unit or the ML555 board. Refer to Figure 3-16, page 78 to see how the SW8 switch and the P18 connector are configured for PCI or PCI-X system bus power.

Figure 3-4 shows the PCI bus connector and power management headers. Refer to Figure 3-16, page 78 to see how the SW8 switch and the P18 connector are configured for PCI power.

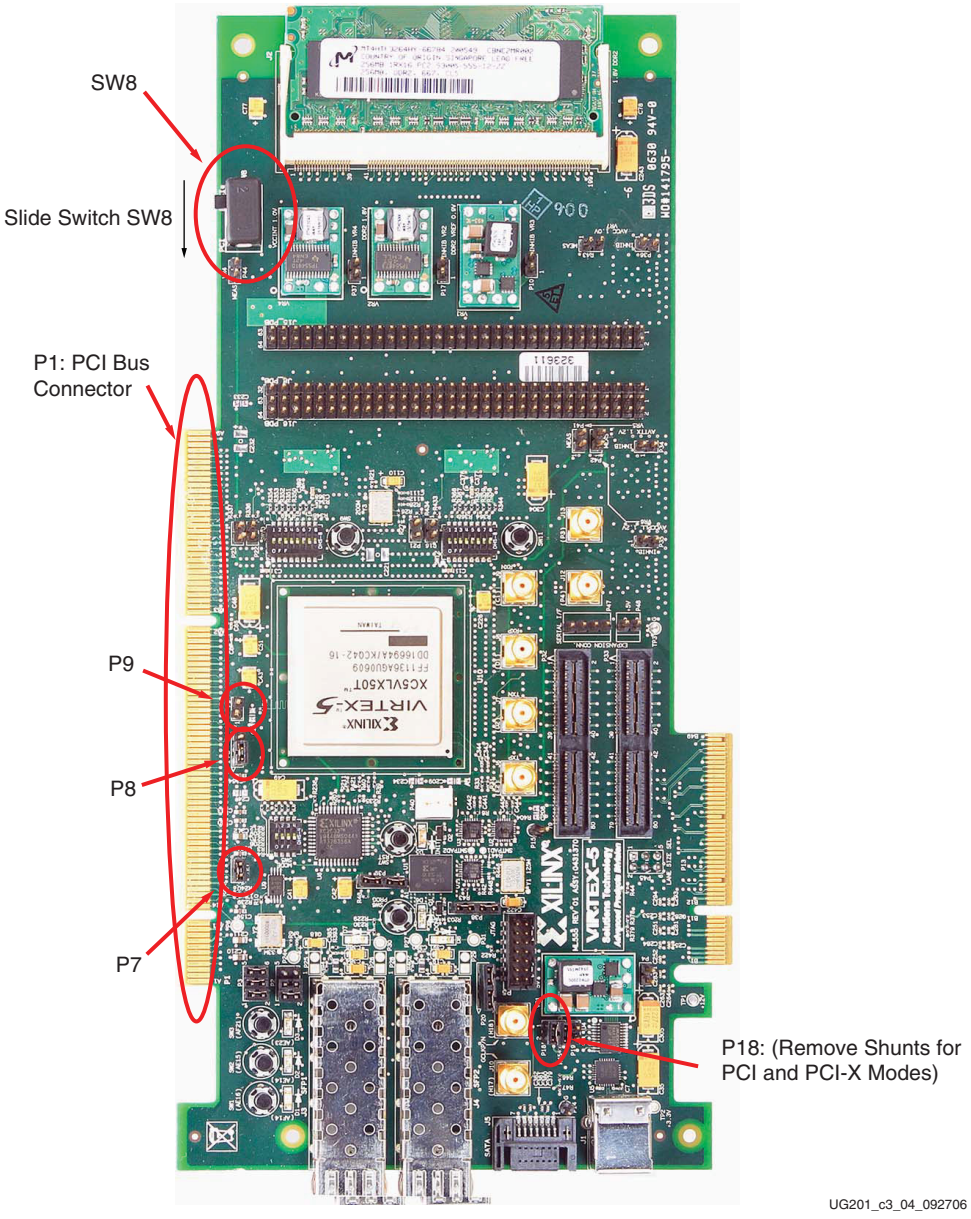

Notes:

1. SW8 and P18 must be configured for PCI power mode.

Figure 3-4: **PCI Connector and Power Management Headers**

Table 3-4 shows the edge connector (P1) pin assignment. The component side of the PCB is side A, and the non-component side or the back of the PCB is side B.

Table 3-4: **P1 PCI Edge Connector Pinout**

P1 A Side	Signal	FPGA Pin(1)	FPGA I/O	P1 B Side	Signal	FPGA Pin(1)	FPGA I/O
32-Bit Connector							
A1	unused	NC(2)		B1	VCC_MINUS12	NC	
A2	VCC12	NC		B2	unused	NC	
A3	unused	NC		B3	GND	NC	
A4	EDGE_JTAG	NC		B4	EDGE_JTAG	NC	
A5	VCC5	NC		B5	VCC5	NC	
A6	EDGE_INTA_B	J31	Out	B6	VCC5	NC	
A7	EDGE_INTC_B	H30	Out	B7	EDGE_INTB_B	G31	Out
A8	VCC5	NC		B8	EDGE_INTD_B	K29	Out
A9	unused	NC		B9	GND	NC	
A10	VCC3V3	NC		B10	unused	NC	
A11	unused	NC		B11	unused	NC	
	3.3V KEY	NC			3.3V KEY	NC	
	3.3V KEY	NC			3.3V KEY	NC	
A14	AUXV	NC		B14	unused	NC	
A15	EDGE_RST_B	J30	In	B15	GND	NC	
A16	VCC3V3	NC		B16	CLK_FROM_EDGE(3)	L34, J14	In
A17	EDGE_GNT_B	N29	In	B17	GND	NC	
A18	GND	NC		B18	EDGE_REQ_B	M30	Out
A19	EDGE_PME_B	L30	Out	B19	VCC3V3	NC	
A20	EDGE_AD30	L31	In/Out	B20	EDGE_AD31	K31	In/Out
A21	VCC3V3	NC		B21	EDGE_AD29	P31	In/Out
A22	EDGE_AD28	P30	In/Out	B22	GND	NC	
A23	EDGE_AD26	N30	In/Out	B23	EDGE_AD27	M31	In/Out
A24	GND	NC		B24	EDGE_AD25	R28	In/Out
A25	EDGE_AD24	R29	In/Out	B25	VCC3V3	NC	
A26	EDGE_IDSEL	P29	In	B26	EDGE_CBE3	F33	In/Out
A27	VCC3V3	NC		B27	EDGE_AD23	T31	In/Out
A28	EDGE_AD22	R31	In/Out	B28	GND	NC	
A29	EDGE_AD20	T30	In/Out	B29	EDGE_AD21	U30	In/Out
A30	GND	NC		B30	EDGE_AD19	T28	In/Out
A31	EDGE_AD18	T29	In/Out	B31	VCC3V3	NC	

Table 3-4: **P1 PCI Edge Connector Pinout *(Continued)***

P1 A Side	Signal	FPGA Pin(1)	FPGA I/O	P1 B Side	Signal	FPGA Pin(1)	FPGA I/O
A32	EDGE_AD16	U28	In/Out	B32	EDGE_AD17	U27	In/Out
A33	VCC3V3	NC		B33	EDGE_CBE2	E34	In/Out
A34	EDGE_FRAME_B	F34	In/Out	B34	GND	NC	
A35	GND	NC		B35	EDGE_IRDY_B	J32	In/Out
A36	EDGE_TRDY_B	H33	In/Out	B36	VCC3V3	NC	
A37	GND	NC		B37	EDGE_DEVSEL_B	H34	In/Out
A38	EDGE_STOP_B	J34	In/Out	B38	EDGE_PCIXCAP	E31	In
A39	VCC3V3	NC		B39	unused	NC	
A40	unused	NC		B40	EDGE_PERR_B	K34	In/Out
A41	unused	NC		B41	VCC3V3	NC	
A42	GND	NC		B42	EDGE_SERR_B	K33	In/Out
A43	EDGE_PAR	G33	In/Out	B43	VCC3V3	NC	
A44	EDGE_AD15	R26	In/Out	B44	EDGE_CBE1	E32	In/Out
A45	VCC3V3	NC		B45	EDGE_AD14	R27	In/Out
A46	EDGE_AD13	U26	In/Out	B46	GND	NC	
A47	EDGE_AD11	U25	In/Out	B47	EDGE_AD12	T26	In/Out
A48	GND	NC		B48	EDGE_AD10	T25	In/Out
A49	EDGE_AD9	B32	In/Out	B49	EDGE_M66EN	L29	In
A50	GND	NC		B50	GND	NC	
A51	GND	NC		B51	GND	NC	
A52	EDGE_CBE0	E33	In/Out	B52	EDGE_AD8	A33	In/Out
A53	VCC3V3	NC		B53	EDGE_AD7	B33	In/Out
A54	EDGE_AD6	C33	In/Out	B54	VCC3V3	NC	
A55	EDGE_AD4	D32	In/Out	B55	EDGE_AD5	C32	In/Out
A56	GND	NC		B56	EDGE_AD3	C34	In/Out
A57	EDGE_AD2	D34	In/Out	B57	GND	NC	
A58	EDGE_AD0	H32	In/Out	B58	EDGE_AD1	G32	In/Out
A59	VCC3V3	NC		B59	VCC3V3	NC	
A60	EDGE_REQ64_B	N33	In/Out	B60	EDGE_ACK64_B	K32	In/Out
A61	VCC5	NC		B61	VCC5	NC	
A62	VCC5	NC		B62	VCC5	NC	
64-Bit Connector							
A63	GND	NC		B63	unused	NC	
A64	EDGE_CBE7	L33	In/Out	B64	GND	NC	

Table 3-4: **P1 PCI Edge Connector Pinout *(Continued)***

P1 A Side	Signal	FPGA Pin(1)	FPGA I/O	P1 B Side	Signal	FPGA Pin(1)	FPGA I/O
A65	EDGE_CBE5	P34	In/Out	B65	EDGE_CBE6	M32	In/Out
A66	VCC3V3	NC		B66	EDGE_CBE4	N34	In/Out
A67	EDGE_PAR64	M33	In/Out	B67	GND	NC	
A68	EDGE_AD62	N32	In/Out	B68	EDGE_AD63	P32	In/Out
A69	GND	NC		B69	EDGE_AD61	T33	In/Out
A70	EDGE_AD60	R34	In/Out	B70	VCC3V3	NC	
A71	EDGE_AD58	R32	In/Out	B71	EDGE_AD59	R33	In/Out
A72	GND	NC		B72	EDGE_AD57	U33	In/Out
A73	EDGE_AD56	T34	In/Out	B73	GND	NC	
A74	EDGE_AD54	U31	In/Out	B74	EDGE_AD55	U32	In/Out
A75	VCC3V3	NC		B75	EDGE_AD53	V32	In/Out
A76	EDGE_AD52	V33	In/Out	B76	GND	NC	
A77	EDGE_AD50	V34	In/Out	B77	EDGE_AD51	W34	In/Out
A78	GND	NC		B78	EDGE_AD49	Y33	In/Out
A79	EDGE_AD48	AA33	In/Out	B79	VCC3V3	NC	
A80	EDGE_AD46	Y34	In/Out	B80	EDGE_AD47	AA34	In/Out
A81	GND	NC		B81	EDGE_AD45	Y32	In/Out
A82	EDGE_AD44	W32	In/Out	B82	GND	NC	
A83	EDGE_AD42	AD34	In/Out	B83	EDGE_AD43	AC34	In/Out
A84	VCC3V3	NC		B84	EDGE_AD41	AC32	In/Out
A85	EDGE_AD40	AB32	In/Out	B85	GND	NC	
A86	EDGE_AD38	AB33	In/Out	B86	EDGE_AD39	AC33	In/Out
A87	GND	NC		B87	EDGE_AD37	AF33	In/Out
A88	EDGE_AD36	AE33	In/Out	B88	VCC3V3	NC	
A89	EDGE_AD34	AE34	In/Out	B89	EDGE_AD35	AF34	In/Out
A90	GND	NC		B90	EDGE_AD33	AH34	In/Out
A91	EDGE_AD32	AJ34	In/Out	B91	GND	NC	
A92	unused	NC		B92	unused	NC	
A93	GND	NC		B93	unused	NC	
A94	unused	NC		B94	GND	NC	

Notes:

1. PCI interface signals are connected to FPGA banks 11, 13, and 15. The reference voltage (V_{CCO}) for these FPGA banks is 3.0V. See the ML555 board schematics on the CD-ROM for additional information.
2. NC = no connect.
3. PCIBUSCLK1 is routed to FPGA global clock input pin J14, and PCIBUSCLK2 is routed to FPGA regional clock input pin L34. See "Clock Generation," page 52 for information on how the PCI bus clock is connected on the ML555 board.

The PCI bus on the board schematics has signal names of the form EDGE_<signal name> (denoting the card edge connector signals). The signal names listed in the A Side and B Side columns of Table 3-4 and Table 3-1, page 24 are standard PCI signal names.

The ML555 board supports both PCI and PCI-X applications. The edge connector interfaces with the system board connector. Xilinx has LogiCORE solutions available for both PCI and PCI-X designs to facilitate getting started with the application-specific design. When installing the ML555 board in a PCI or PCI-X add-in card slot, the PCI Express bracket must be removed from the ML555 board prior to plugging into the system. The connectors on the ML555 board are oriented for PCI Express operation. When using a PCI system, the motherboard should be removed from the system chassis as the I/O on the ML555 board is not oriented to escape out the back of the system unit frame.

ML555 Configuration Headers for PCI Operation

M66EN - 66 MHz Enable (Connector P9)

P1.B49 is wired to two-pin header pin P9.1. With the P9 jumper shunt removed, M66EN has a 0.01 µF capacitor to GND. Placing the jumper shunt across pins 1 and 2 of P9 shorts M66EN to GND.

- M66EN = GND indicates 0 to 33 MHz operation.
- M66EN = open indicates 33 MHz to 66 MHz operation. (M66EN is pulled up on the system board.)

PME# - Power Management Event (Connector P7)

P1.A19 is wired to a two-pin header pin P7.1. PME# is pulled up on the system board. P7.2 is wired to U10 pin L30, allowing the FPGA to drive or sense the PME# signal when a jumper shunt is placed across pins 1 and 2 of P7. The *LogiCORE User Guide for PCI/PCI-X* can be consulted for more information on proper use of PME#. By default the PME# signal is not connected from the system board to the FPGA, meaning the system boards sees only the pull-up resistor, and the FPGA input is not connected to the system board signal.

PCIXCAP - PCI-X Capability (Connector P8)

P1.B38 is wired to 3-pin header P8 (center pin), and PCIXCAP is connected to FPGA pin E31.

- P8.1 is wired to GND through a 10 KΩ pulldown resistor.
- P8.2 is wired to P1.B38 and a 0.01µF capacitor to GND.
- P8.3 is wired to GND.
- A jumper shunt across P8 pins 1 and 2 indicates that the card is PCI-X 66 capable.
- No jumper shunt across P8 indicates that the card is PCI-X 133 capable.
- A jumper shunt across P8 pins 2 and 3 indicates that the card is not PCI-X capable (i.e., it is PCI capable and not PCI-X capable).

Reference Designs for PCI and PCI-X Operation

The included FPGA bitstreams are example implementations of the PCI32 v4.1 and PCI-X v6.1 LogiCORE solutions. In these example implementations, the cores are configured to provide one PCI I/O Space Base Address Register (BAR) and one Memory Space BAR. The example application on the user interface in these PCI implementations is the same as

provided with the cores: a simple one-doubleword (DW) register behind the I/O BAR and a 16 DW memory behind the memory BAR.

To use the provided example implementation for PCI operation:

1. Load the bitstream onto the ML555 FPGA (see Table 3-37, page 86).
2. Reboot the host computer (without power cycling the ML555 board).
3. The host BIOS will configure the core for PCI in the design.
4. Use a configuration utility to verify that the device was configured properly and look for a device with a Vendor ID of `0x10EE` and a Device ID of `0x0050`.

XAPP999 [Ref 7] describes how to build a reference system for the Processor Local Bus Peripheral Component Interconnect (PLBv46 PCI) core using a MicroBlaze™ processor-based embedded system using the ML555 board.

DDR2 SDRAM SODIMM

The ML555 board contains a 200-pin, small-outline dual in-line memory module (SODIMM) connector (J2) that supports installation of DDR2 SDRAM SODIMMs of 128 MB, 256 MB, or 512 MB. Dual-rank SODIMMs are not supported. Xilinx provides a 256 MB DDR2-667 SODIMM Micron Semiconductor part number 4HTF3264HY-40E with the kit. Table 3-5 provides a description of the memory interface signal descriptions, SODIMM connector pin assignments, and associated FPGA pin assignments. The SODIMM interface supports customer installation of DDR2-533 and/or DDR2-400 SODIMMs. One of the clock synthesizers must be used to generate the clock frequency for the SODIMM interface. For most applications, Clock Synthesizer 1 is used for DDR2 memory applications and Clock Synthesizer 2 is used for GTP transceiver applications.

The ML555 board does not support a 72-bit DDR data interface required for parity or error correction codes (ECC). The speed grade of the FPGA limits the DDR2 memory clock support to a range of 200-233 MHz or 400-466 million transfers per second. Included on the CD-ROM is a reference design for the DDR2 memory contained on the ML555. Verilog source code and a BIT file are included which can be loaded into the FPGA using the Platform Cable USB download cable and Xilinx iMPACT configuration software. See the `Readme.txt` file in the design directory for information about running and implementing the design.

Characteristics of the DDR2 SDRAM SODIMM (provided with the kit):

- Organization 32M x 64 bit
- Memory clock speed 5 ns/200 MHz using the clock synthesizer
- CAS latency 3 or 4 (DDR2-400)
- 1.8V I/O (Stub-Series Terminated Logic (SSTL_18) compatible)

The data sheet for the DDR2 SDRAM SODIMM kit can be obtained from Micron Semiconductor at www.micron.com/products/modules. Contact Micron for availability of other compatible products, including device capacity, clock speeds, and CAS latency options, in the 200-pin SODIMM form factor.

The ML555 board memory interface design includes on-board 50 Ω termination resistors to 0.9V, at the FPGA end of the interface, for the 64-bit bidirectional DQ data bus. The differential DQS signals sourced from the FPGA should use a DIFF_SSTL18_II primitive as the I/O driver element. The address and control signals have 50 Ω termination resistors to 0.9V at the SODIMM end of the interface. The SODIMM provides a 120 Ω termination network for the differential clock inputs. On-die termination (ODT) is used to terminate

the DQ and DQS ports on the SODIMM side of the interface. The Xilinx Digitally Controlled Impedance (DCI) standard SSTL18_I_DCI can be utilized to terminate unidirectional address and control signals transmitted by the FPGA. External 50 Ω reference resistors are provided to VRN and VRP for the memory interface banks of the XC5VLX50T FPGA. See the *Virtex-5 FPGA User Guide* for additional information on DCI. For assistance designing a DDR2 interface, refer to the Xilinx Memory Corner website at: www.xilinx.com/products/design_resources/mem_corner/.

For application assistance specifically for Virtex-5 FPGA DDR2 memory controllers, refer to XAPP858 [Ref 8] and XAPP865 [Ref 9]. *Xilinx Memory Interface Generator (MIG) User Guide* [Ref 10] contains detailed technical information for designing memory controllers using Virtex-5 FPGAs.

Table 3-5: **SDRAM Interface Signal Descriptions**

SODIMM Front	Signal	FPGA Pin(1)	FPGA In/Out	SODIMM Back	Signal	FPGA Pin(1)	FPGA In/Out
1	DDR2_VREF	NC(2)		2	GND	NC	
3	GND	NC		4	DQ4	V25	In/Out
5	DQ0	W24	In/Out	6	DQ5	W25	In/Out
7	DQ1	V24	In/Out	8	GND	NC	
9	GND	NC		10	DM0	V30	Out
11	DQS0_B	AA31	In/Out	12	GND	NC	
13	DQS0	AB31	In/Out	14	DQ6	Y27	In/Out
15	GND	NC		16	DQ7	W27	In/Out
17	DQ2	Y26	In/Out	18	GND	NC	
19	DQ3	W26	In/Out	20	DQ12	W29	In/Out
21	GND	NC		22	DQ13	V29	In/Out
23	DQ8	V28	In/Out	24	GND	NC	
25	DQ9	V27	In/Out	26	DM1	AD30	Out
27	GND	NC		28	GND	NC	
29	DQS1_B	AC30	In/Out	30	CK0	AH9	Out
31	DQS1	AB30	In/Out	32	CK0_B	AH10	Out
33	GND	NC		34	GND	NC	
35	DQ10	W31	In/Out	36	DQ14	Y28	In/Out
37	DQ11	Y31	In/Out	38	DQ15	Y29	In/Out
39	GND	NC		40	GND	NC	
41	GND	NC		42	GND	NC	
43	DQ16	AC29	In/Out	44	DQ20	AF29	In/Out
45	DQ17	AF31	In/Out	46	DQ21	AF30	In/Out
47	GND	NC		48	GND	NC	
49	DQS2_B	AA30	In/Out	50	No connect	NC	

Table 3-5: **SDRAM Interface Signal Descriptions *(Continued)***

SODIMM Front	Signal	FPGA Pin[1]	FPGA In/Out	SODIMM Back	Signal	FPGA Pin[1]	FPGA In/Out
51	DQS2	AA29	In/Out	52	DM2	AH29	Out
53	GND	NC		54	GND	NC	
55	DQ18	AJ31	In/Out	56	DQ22	AJ30	In/Out
57	DQ19	AK31	In/Out	58	DQ23	AH30	In/Out
59	GND	NC		60	GND	NC	
61	DQ24	AA25	In/Out	62	DQ28	Y24	In/Out
63	DQ25	AA26	In/Out	64	DQ29	AA24	In/Out
65	GND	NC		66	GND	NC	
67	DM3	AC28	Out	68	DQS3_B	AJ29	In/Out
69	No connect	NC		70	DQS3	AK29	In/Out
71	GND	NC		72	GND	NC	
73	DQ26	AB27	In/Out	74	DQ30	AB25	In/Out
75	DQ27	AC27	In/Out	76	DQ31	AB26	In/Out
77	GND	NC		78	GND	NC	
79	CKE0	AG8	Out	80	No connect	NC	
81	DDR2_VCC1V8	NC		82	DDR2_VCC1V8	NC	
83	No connect	NC		84	No connect	NC	
85	BA2_NC5	AF11	Out	86	No connect	NC	
87	DDR2_VCC1V8	NC		88	DDR2_VCC1V8	NC	
89	A12	AH19	Out	90	A11	AH20	Out
91	A9	AH15	Out	92	A7	AG16	Out
93	A8	AG20	Out	94	A6	AH17	Out
95	DDR2_VCC1V8	NC		96	DDR2_VCC1V8	NC	
97	A5	AH22	Out	98	A4	AG22	Out
99	A3	AG17	Out	100	A2	AH18	Out
101	A1	AF18	Out	102	A0	AE18	Out
103	DDR2_VCC1V8	NC		104	DDR2_VCC1V8	NC	
105	A10	AG15	Out	106	BA1	AH13	Out
107	BA0	AH14	Out	108	RAS_B	AG13	Out
109	WE_B	AF19	Out	110	S0_B	AG18	Out
111	DDR2_VCC1V8	NC		112	DDR2_VCC1V8	NC	
113	CAS_B	AH12	Out	114	ODT0	AG30	Out
115[3]	No connect	NC		116	No connect	NC	

Table 3-5: **SDRAM Interface Signal Descriptions *(Continued)***

SODIMM Front	Signal	FPGA Pin(1)	FPGA In/Out	SODIMM Back	Signal	FPGA Pin(1)	FPGA In/Out
117	DDR2_VCC1V8	NC		118	DDR2_VCC1V8	NC	
119	No connect	NC		120	No connect	NC	
121	GND	NC		122	GND	NC	
123	DQ32	AB28	In/Out	124	DQ36	AK26	In/Out
125	DQ33	AA28	In/Out	126	DQ37	AF28	In/Out
127	GND	NC		128	GND	NC	
129	DQS4_B	AK27	In/Out	130	DM4	AF24	Out
131	DQS4	AK28	In/Out	132	GND	NC	
133	GND	NC		134	DQ38	AE28	In/Out
135	DQ34	AG28	In/Out	136	DQ39	AJ27	In/Out
137	DQ35	AH28	In/Out	138	GND	NC	
139	GND	NC		140	DQ44	AC25	In/Out
141	DQ40	AG25	In/Out	142	DQ45	AC24	In/Out
143	DQ41	AG27	In/Out	144	GND	NC	
145	GND	NC		146	DQS5_B	AJ26	In/Out
147	DM5	AD24	Out	148	DQS5	AH27	In/Out
149	GND	NC		150	GND	NC	
151	DQ42	AE27	In/Out	152	DQ46	AD26	In/Out
153	DQ43	AE26	In/Out	154	DQ47	AD25	In/Out
155	GND	NC		156	GND	NC	
157	DQ48	AN14	In/Out	158	DQ52	AN13	In/Out
159	DQ49	AP14	In/Out	160	DQ53	AM13	In/Out
161	GND	NC		162	GND	NC	
163	No connect	NC		164	CK1	AG10	Out
165	GND	NC		166	CK1_B	AG11	Out
167	DQS6_B	AD11	In/Out	168	GND	NC	
169	DQS6	AD10	In/Out	170	DM6	AP12	Out
171	GND	NC		172	GND	NC	
173	DQ50	AB10	In/Out	174	DQ54	AA8	In/Out
175	DQ51	AA10	In/Out	176	DQ55	AA9	In/Out
177	GND	NC		178	GND	NC	
179	DQ56	AC8	In/Out	180	DQ60	AC10	In/Out
181	DQ57	AB8	In/Out	182	DQ61	AC9	In/Out

Table 3-5: **SDRAM Interface Signal Descriptions *(Continued)***

SODIMM Front	Signal	FPGA Pin(1)	FPGA In/Out	SODIMM Back	Signal	FPGA Pin(1)	FPGA In/Out
183	GND	NC		184	GND	NC	
185	DM7	AJ9	Out	186	DQS7_B	AJ11	In/Out
187	GND	NC		188	DQS7	AK11	In/Out
189	DQ58	AM12	In/Out	190	GND	NC	
191	DQ59	AM11	In/Out	192	DQ62	AK9	In/Out
193	GND	NC		194	DQ63	AF9	In/Out
195	SDA	AD9	In/Out	196	GND	NC	
197	SCL	AE8	Out	198	GND(SA0)	NC	
199	DDR2_VCC1V8	NC		200	GND(SA1)	NC	

Notes:

1. DDR2 memory interface signals are connected to FPGA banks 4, 17, 21, and 22. The FPGA reference voltage, V_{CCO}, for these banks is 1.8V. See the ML555 board schematics on the CD-ROM for further information.
2. NC = no connect.
3. Pin 115 (S1_B) is a no connect because the ML555 board does not support dual-rank SODIMMs.

Power consumption for the DDR2 memory interface is dependent upon the density and speed of DDR2 memory installed in the SODIMM socket. Table 3-6 shows approximate 1.8V current consumption requirements by density and transfer rate for Micron Semiconductor SODIMMs supported by the ML555 board. Memory data sheet specifications should be consulted to determine specific power requirements for the SODIMM memory devices. Higher densities and higher performance SODIMMs are supported, however, the user must calculate total application power and stay within the PCI and/or PCI Express add-in card specifications.

Table 3-6: **DDR2 SODIMM Current Consumption versus Data Transfer Rate**

Memory Density	400 MT/s	533 MT/s	667 MT/s
128 MB	480 mA	720 mA	860 mA
256 MB	620 mA	780 mA	940 mA
512 MB	720 mA	780 mA	1100 mA

Current consumption can be higher than shown in Table 3-6 if the four memory banks are interleaved in the DDR2 memory. Interleaving is accomplished by using the BA[2:0] bank address as the least-significant column address bits to the DDR2 memory. This increases power dissipation rather than memory performance, and should be avoided for PCI Express and PCI bus applications where add-in card power is limited by specification to 25W.

Small Form-factor Pluggable (SFP) Module Interface

The ML555 board has two SFP connectors that support user-installed SFP modules to support Fibre Channel and Gigabit Ethernet interfaces. The interface is compliant with the multi-source agreement specification entitled Cooperation Agreement for Small Form-Factor Pluggable Transceivers. Table 3-7 lists the connector pins and any associated FPGA connectivity. The ML555 board provides filtered 3.3V power to both SFP modules per the SFP specification.

Table 3-7: **SFP Connectors**

SFP1-J3	Signal(1)	FPGA Pin(2)	SFP2-J4	FPGA Pin
1	GND	NC(3)	1	NC
2	SFP{1/2}_TX_FAULT(4)	NC	2	NC
3	SFP{1/2}_TX_DISABLE(5)	NC	3	NC
4	IIC_SDA_SFP{1/2}	E8	4	F8
5	II2_SCK_SFP{1/2}	E9	5	F9
6	SFP{1/2}_TCVR_PRESENT_B(6)	NC	6	NC
7	SFP{1/2}_RATE_SEL(7)	NC	7	NC
8	SFP{1/2}_LOS(8)	NC	8	NC
9	GND	NC	9	NC
10	GND	NC	10	NC
11	GND	NC	11	NC
12	SFP{1/2}_RXN	H1	12	J1
13	SFP{1/2}_RXP	G1	13	K1
14	GND	NC	14	NC
15	SFP_RX_3.3V	NC	15	NC
16	SFP_TX_3.3V	NC	16	NC
17	GND	NC	17	NC
18	SFP{1/2}_TXP	F2	18	L2
19	SFP{1/2}_TXN	G2	19	K2
20	GND	NC	20	NC

Notes:

1. Transceiver port names do not include the "{1/2}" shown in this table. Replace "{1/2}" with "SFP1" or "SFP2" as the prefix or suffix in the port name. The SFP ports are connected to GTP_DUAL tile X0Y4.
2. The I^2C interface signals are connected to FPGA bank 20. The reference voltage, V_{CCO}, for this bank is 2.5V.
3. NC = no connect.
4. TX_FAULT input from SFP goes to a board testpoint only.
5. TX_DISABLE has an on-board 4.7 KΩ pull-down resistor. By default, the transceiver is enabled. Some SFP modules require a stronger pull-down resistor to enable the transmitter. In this situation, resistors R394 and R402 on the ML555 board should be replaced with a 1 KΩ or lower value resistor to force the transmitter to be enabled.
6. TCVR_PRESENT is not connected to the FPGA.
7. RATE_SEL is pulled up to 3.3V with a 4.7 KΩ resistor. P26 or P29 (pin 1 or 2) is shorted to ground to select a different transmission rate.
8. Loss of signal from the SFP interface is connected to light emitting diode (LED) D7 for SFP1 and D8 for SFP2.

The ML555 kit does not include SFP modules to plug into the connectors. The user must provide these.

Serial ATA Interface

The ML555 board provides a single Serial ATA (SATA) disk drive interface connector, J5, for attachment to an external SATA disk drive. The board supports 1.5 Gbps and 3 Gbps SATA baud rates. A second SATA interface can be supported using the SMA connectors on the board and an external SMA to SATA interface board available from Xilinx with part number HW-AFX-SMA-SATA. The SATA and SMA transceivers are connected to a common GTP primitive block in the FPGA.

One of the two provided clock synthesizer modules must be used to generate a 150 MHz reference clock for the SATA GTP transceiver.

The ML555 board does not provide DC power to the drive. An external DC power supply must provide the drive power. The SATA signal interface cable is not supplied with the development kit.

Xilinx Alliance Partners have IP cores that can be licensed for development and fielding a SATA interface solution. The available Alliance Partners IP cores can be found at www.xilinx.com/alliance/.

XAPP870 [Ref 11] provides a reference design demonstrating how to complete the SATA physical link initialization between the GTP transceiver in the Virtex-5 LXT FPGA and an external SATA device.

Table 3-8 lists the signal names and pin assignments for the SATA connector. The ML555 board does not provide DC power for the SATA drives.

Table 3-8: **SATA Connector**

J5	Signal	FPGA Pin
1	GND	NC(1)
2	SATA_TXP(2)	B4
3	SATA_TXN(2)	B3
4	GND	NC
5	SATA_RXN(2)	A2
6	SATA_RXP(2)	A3
7	GND	NC

Notes:

1. NC = no connect.
2. The Host side transceiver ports are AC coupled with a 0.01 µF capacitor. The SATA interface is connected to GTP_DUAL tile X0Y5.

SMA Connectors

The ML555 board has a set of SMA connectors to facilitate routing one set of GTP transceiver signals off the card to an external device. Another set of SMA connectors is also provided to input a clock to the GTP MGTREFCLK inputs. There are a number of Xilinx evaluation boards that convert an SMA interface to SATA, RJ45, or SFP, for example. GTP_DUAL tile X0Y5 is connected to the SMA connectors.

Table 3-9 lists the signal names and pin assignments for the SMA connectors. SMA connectors interface to GTP_DUAL tile X0Y5.

Table 3-9: **SMA Connector**

SMA Reference Designator	Signal Name	FPGA Pin	FPGA I/O
J6	SMA_TXP	E2	Out
J7	SMA_TXN	D2	Out
J8	SMA_RXP	D1	In
J9	SMA_RXN	C1	In
J12(1)	SMA_GTPCLK_P4_P	P4	In
J13(1)	SMA_GTPCLK_P3_N	P3	In

Notes:

1. DC blocking capacitors should be installed between the test equipment and the SMA connector when clocking the GTP transceiver with an external clock source.

Ethernet PHY Daughtercard Support

The ML555 board provides a Xilinx Generic Interface (XGI) connector system wired to support attachment of the Xilinx Ethernet PHY Daughtercard, part number HW-AFX-BERG-EPHY. The EPHY daughtercard is not included with the development kit but can be purchased separately. The XC5VLX50T FPGA has up to four embedded tri-mode Ethernet MAC blocks that provide the data link layer interface to the external PHY. The Xilinx library of soft Ethernet LogiCORE products can also provide Ethernet connectivity solutions.

The PHY daughtercard contains two Marvell Alaska Gigabit Ethernet over copper transceivers, part number 88E1111. The PHY devices perform all physical layer functions, operate at 10/100/1000 Mb/s and support the embedded tri-mode Ethernet MAC within the Virtex-5 XC5VLX50T FPGA.

The PHY supports GMII, MII, SGMII, and RGMII Ethernet physical interfaces.

The ML555 board contains a 125 MHz oscillator used for the embedded tri-mode EMAC reference clock.

The ML555 development kit contains two plastic standoffs used with the PHY daughter card for mechanical support. Refer to UG065 [Ref 3] before powering up the ML555 board and PHY daughtercard, because the configuration headers on both boards must be set up properly before power is applied.

Table 3-10 and Table 3-11 list the signal and pin assignments for the J15 and J16 connectors, respectively.

Table 3-10: **Ethernet PHY Daughtercard J15 Connection(1)**

J15-EVEN	Signal	J15-ODD	Signal	FPGA Pin(2)	FPGA In/Out
2	GND	1	P1_TD_TXD1	M8	Out
4	GND	3	P1_TXCTL_TXEN	F11	Out
6	GND	5	P1_TXC_GTXCLK(3)	K8	Out
8	GND	7	P1_COL	L9	In
10	GND	9	P1_TD_TXD3	E12	Out
12	GND	11	P1_TD_TXD2	N9	Out
14	GND	13	No connect	NC(4)	
16	GND	15	P1_TD_TXD0	F13	Out
18	GND	17	P1_TXD7	G13	Out
20	GND	19	P1_TXD6	N10	Out
22	GND	21	P1_TXD5	E13	Out
24	GND	23	P1_TXD4	L8	Out
26	GND	25	P1_MDC	E7	Out
28	GND	27	P1_MDIO	U10	In/Out
30	GND	29	P1_TXER	G7	Out
32	GND	31	P1_INT	T11	In
34	GND	33	P0_COL	F6	In
36	GND	35	P0_TXD7	P9	Out
38	GND	37	P0_INT	G5	In
40	GND	39	P0_TXD6	P10	Out
42	GND	41	P0_TXD5	M5	Out
44	GND	43	P0_TXD4	N7	Out
46	GND	45	P0_TD_TXD3	L6	Out
48	GND	47	P0_TD_TXD2	N5	Out
50	GND	49	P0_TD_TXD1	L4	Out
52	GND	51	P0_TD_TXD0	P7	Out
54	GND	53	P0_MDC	K7	Out
56	GND	55	P0_MDIO	R6	In/Out
58	GND	57	RESET_B	T6	Out
60	GND	59	P0_TXC_GTXCLK(3)	T8	Out
62	GND	61	P0_TXCTL_TXEN	U7	Out
64	GND	63	P0_TXER	J7	Out

Notes:

1. UG065 [Ref 3] provides additional information on the HW-AFX-BERG-EPHY Daughtercard.
2. These signals are connected to FPGA banks 12 and 20. The bank reference voltage, V_{CCO}, is 2.5V. See the ML555 board schematics on the CD-ROM for additional information.
3. These clocks are connected to FPGA clock-capable I/O pins.
4. NC = no connect.

Table 3-11: **Ethernet PHY Daughtercard J16 Connection**

J16-EVEN	Signal	J16-ODD	Signal	FPGA Pin(1)	FPGA In/Out
2	GND	1	No connect	NC(2)	
4	GND	3	P1_RXC_RXCLK(3)	J10	In
6	GND	5	P1_RD_RXD1	E11	In
8	GND	7	P1_RXCTL_RXDV	M10	In
10	GND	9	P1_RCLK1(4)	K18	In
12	GND	11	P1_CRS	G11	In
14	GND	13	P1_RXER	G12	In
16	GND	15	P1_RXD7	E6	In
18	GND	17	P1_RD_RXD0	T9	In
20	GND	19	No connect	NC	
22	GND	21	P1_RD_RXD2	G6	In
24	GND	23	P1_RD_RXD3	T10	In
26	GND	25	P1_RXD4	F5	In
28	GND	27	P1_RXD5	R9	In
30	GND	29	P1_RXD6	H5	In
32	GND	31	P0_CRS	R11	In
34	GND	33	No connect	NC	
36	GND	35	P0_RD_RXD0	M6	In
38	GND	37	P0_RD_RXD1	N8	In
40	GND	39	No connect	NC	
42	GND	41	P0_RD_RXD2	M7	In
44	GND	43	No connect	NC	
46	GND	45	P0_RXCTL_RXDV	J6	In
48	GND	47	P0_RXD4	P5	In
50	GND	49	P0_RXD5	L5	In
52	GND	51	P0_RXD6	P6	In
54	GND	53	P0_RXD7	K6	In
56	GND	55	P0_RCLK1(4)	H14	In
58	GND	57	P0_RD_RXD3	J5	In
60	GND	59	P0_RXER	R8	In
62	GND	61	P0_RXC_RXCLK(3)	H7	In
64	GND	63	No connect	NC	

Notes:

1. These signals are connected to FPGA banks 12 and 20. The bank reference voltage, V_{CCO}, is 2.5V. See the ML555 board schematics on the CD-ROM for additional information.
2. NC = no connect.
3. These clocks are connected to FPGA clock-capable I/O pins.
4. These clocks are connected to FPGA global clock pins.

LVDS Interface

The ML555 board supports low voltage differential signaling (LVDS) applications with 24 transmit channels and 24 receive channels of LVDS signals. Two Samtec QSE-DP connectors are provided, one for the transmit interface and a second for the receive interface. Single data rate (SDR) and double data rate (DDR) LVDS applications can be designed targeting the ML555 board. An SDR SFI-4 interface or XSBI interface consists of 16 LVDS data channels and a forwarded clock. A DDR SPI4.2 like interface consists of 16 LVDS data channels and one forwarded clock. Xilinx has several SDR and DDR LVDS reference designs that can be ported to run on the ML555 board.

The LVDS transmit and receive connectors can be connected to each other for loopback testing as shown in Figure 3-6, page 49. The loopback interface cables are not provided with the kit, but can be ordered separately from Xilinx as part number HW-LVDS-CBL-80. The LVDS transmit and receive connectors can also be connected to either an ML450 or ML550 networking interfaces board from Xilinx. Additional information on Xilinx board products is located at www.xilinx.com/products/devboards/index.htm.

Figure 3-5 shows the P32 and P33 LVDS connectors.

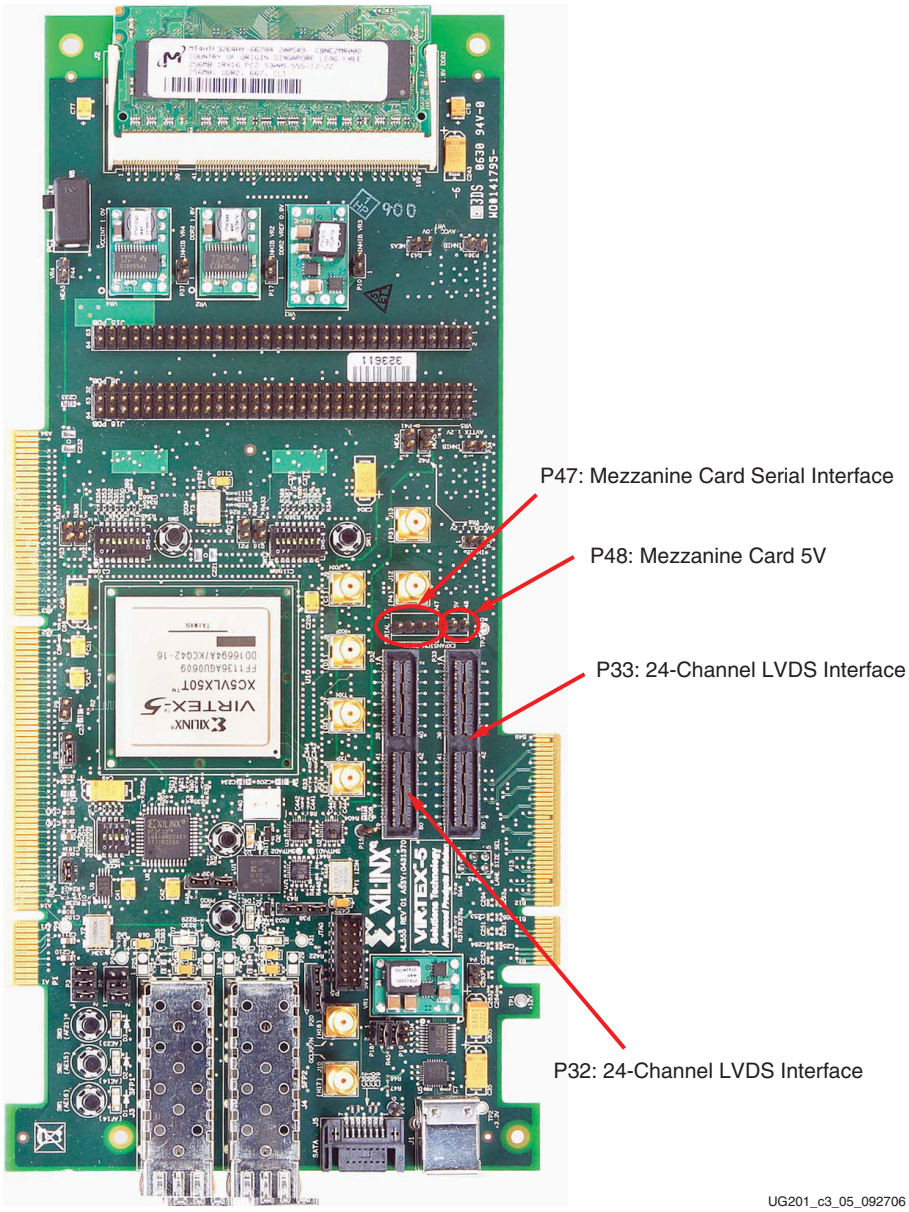

Figure 3-5: **LVDS and Mezzanine Card Connectors**

Table 3-12 and Table 3-13 list the SAMTEC pin connections for P32 and P33, respectively.

Table 3-12: **SAMTEC Pin Connections (P32)**

SAMTEC-QSE-028-DP P32 Odd	Signal(1)	FPGA Pin	SAMTEC-QSE-028-DP P32 Even	Signal(1)	FPGA Pin
1	GPIO1_I00_N(2)	K22	2	GPIO1_I01_N(2)	H23
3	GPIO1_I00_P(2)	K23	4	GPIO1_I01_P(2)	G23
5	GND	N/A	6	GND	N/A
7	No connect(3)	N/A	8	No connect	N/A

Table 3-12: **SAMTEC Pin Connections (P32) *(Continued)***

SAMTEC-QSE-028-DP P32 Odd	Signal[1]	FPGA Pin	SAMTEC-QSE-028-DP P32 Even	Signal[1]	FPGA Pin
9	No connect	N/A	10	No connect	N/A
11	GND	N/A	12	GND	N/A
13	GPIO1_I02_N	T24	14	GPIO1_I03_N	N25
15	GPIO1_I02_P	R24	16	GPIO1_I03_P	P25
17	GND	N/A	18	GND	N/A
19	GPIO1_I04_N	P24	20	GPIO1_I05_N	P27
21	GPIO1_I04_P	N24	22	GPIO1_I05_P	P26
23	GND	N/A	24	GND	N/A
25	GPIO1_I06_N	N28	26	GPIO1_I07_N	K26
27	GPIO1_I06_P	M28	28	GPIO1_I07_P	K27
29	GND	N/A	30	GND	N/A
31	GPIO1_I08_N	L28	32	GPIO1_I09_N	M27
33	GPIO1_I08_P	K28	34	GPIO1_I09_P	N27
35	GND	N/A	36	GND	N/A
37	GPIO1_I10_N[4]	E27	38	GPIO1_I11_N[4]	F28
39	GPIO1_I10_P[4]	E26	40	GPIO1_I11_P[4]	E28
41	GPIO1_I12_N[4]	G28	42	GPIO1_I13_N[4]	H27
43	GPIO1_I12_P[4]	H28	44	GPIO1_I13_P[4]	G27
45	GND	N/A	46	GND	N/A
47	GPIO1_I14_N	F26	48	GPIO1_I15_N	H24
49	GPIO1_I14_P	F25	50	GPIO1_I15_P	H25
51	GND	N/A	52	GND	N/A
53	GPIO1_I16_N	G26	54	GPIO1_I17_N	J26
55	GPIO1_I16_P	G25	56	GPIO1_I17_P	J27
57	GND	N/A	58	GND	N/A
59	GPIO1_I18_N	M26	60	GPIO1_I19_N	J25
61	GPIO1_I18_P	M25	62	GPIO1_I19_P	J24
63	GND	N/A	64	GND	N/A
65	GPIO1_I20_N	L26	66	GPIO1_I21_N	L24
67	GPIO1_I20_P	L25	68	GPIO1_I21_P	K24
69	GND	N/A	70	GND	N/A
71	No connect	N/A	72	No connect	N/A

Table 3-12: **SAMTEC Pin Connections (P32) *(Continued)***

SAMTEC-QSE-028-DP P32 Odd	Signal(1)	FPGA Pin	SAMTEC-QSE-028-DP P32 Even	Signal(1)	FPGA Pin
73	No connect	N/A	74	No connect	N/A
75	GND	N/A	76	GND	N/A
77	GPIO1_I22_N(2)	K12	78	GPIO1_I23_N(2)	H12
79	GPIO1_I22_P(2)	K13	80	GPIO1_I23_P(2)	J12

Notes:

1. These signals are connected to FPGA banks 1 and 19. The FPGA reference voltage for these banks is 2.5V. See the ML555 board schematics on the CD-ROM for additional information.
2. Bank 1 GPIO clock-capable I/O signals. All others are in FPGA Bank 19.
3. NC = no connect.
4. Bank 19 clock-capable I/O pins.

Table 3-13: **SAMTEC Pin Connections (P33)**

SAMTEC-QSE-028-DP P33 Odd	Signal(1)	FPGA Pin	SAMTEC-QSE-028-DP P33 Even	Signal(1)	FPGA Pin
1	GP1O2_I23_P(2)	AF13	2	GP1O2_I22_P(2)	AE13
3	GP1O2_I23_N(2)	AG12	4	GP1O2_I22_N(2)	AE12
5	GND	N/A	6	GND	N/A
7	No Connect	N/A	8	No Connect	N/A
9	No Connect	N/A	10	No Connect	N/A
11	GND	N/A	12	GND	N/A
13	GP1O2_I21_P	AC4	14	GP1O2_I20_P	AB6
15	GP1O2_I21_N	AC5	16	GP1O2_I20_N	AB7
17	GND	N/A	18	GND	N/A
19	GP1O2_I19_P	AA5	20	GP1O2_I18_P	AC7
21	GP1O2_I19_N	AB5	22	GP1O2_I18_N	AD7
23	GND	N/A	24	GND	N/A
25	GP1O2_I17_P	Y8	26	GP1O2_I16_P	AD4
27	GP1O2_I17_N	Y9	28	GP1O2_I16_N	AD5
29	GND	N/A	30	GND	N/A
31	GP1O2_I15_P	AA6	32	GP1O2_I14_P	AD6
33	GP1O2_I15_N	Y7	34	GP1O2_I14_N	AE6
35	GND	N/A	36	GND	N/A
37	GP1O2_I13_P(4)	W6	38	GP1O2_I12_P(4)	AE7

Table 3-13: **SAMTEC Pin Connections (P33) *(Continued)***

SAMTEC-QSE-028-DP P33 Odd	Signal[1]	FPGA Pin	SAMTEC-QSE-028-DP P33 Even	Signal[1]	FPGA Pin
39	GP1O2_I13_N[4]	Y6	40	GP1O2_I12_N[4]	AF6
41	GP1O2_I11_P[4]	AG5	42	GP1O2_I10_P[4]	W7
43	GP1O2_I11_N[4]	AF5	44	GP1O2_I10_N[4]	V7
45	GND	N/A	46	GND	N/A
47	GP1O2_I09_P	AH5	48	GP1O2_I08_P	Y11
49	GP1O2_I09_N	AG6	50	GP1O2_I08_N	W11
51	GND	N/A	52	GND	N/A
53	GP1O2_I07_P	AH7	54	GP1O2_I06_P	W10
55	GP1O2_I07_N	AG7	56	GP1O2_I06_N	W9
57	GND	N/A	58	GND	N/A
59	GP1O2_I05_P	AJ7	60	GP1O2_I04_P	V8
61	GP1O2_I05_N	AJ6	62	GP1O2_I04_N	U8
63	GND	N/A	64	GND	N/A
65	GP1O2_I03_P	AK7	66	GP1O2_I02_P	V10
67	GP1O2_I03_N	AK6	68	GP1O2_I02_N	V9
69	GND	N/A	70	GND	N/A
71	No Connect	N/A	72	No Connect	N/A
73	No Connect	N/A	74	No Connect	N/A
75	GND	N/A	76	GND	N/A
77	GP1O2_I01_P[2]	AF23	78	GP1O2_I00_P[2]	AE22
79	GP1O2_I01_N[2]	AG23	80	GP1O2_I00_N[2]	AE23

Notes:

1. These signals are connected to FPGA banks 2 and 18. The FPGA reference voltage for these banks is 2.5V. See ML555 board schematics on the CD-ROM for additional information.
2. Bank 2 GPIO clock-capable I/O signals. All others are in FPGA Bank 18.
3. NC = no connect.
4. Bank 18 clock-capable I/O pins.

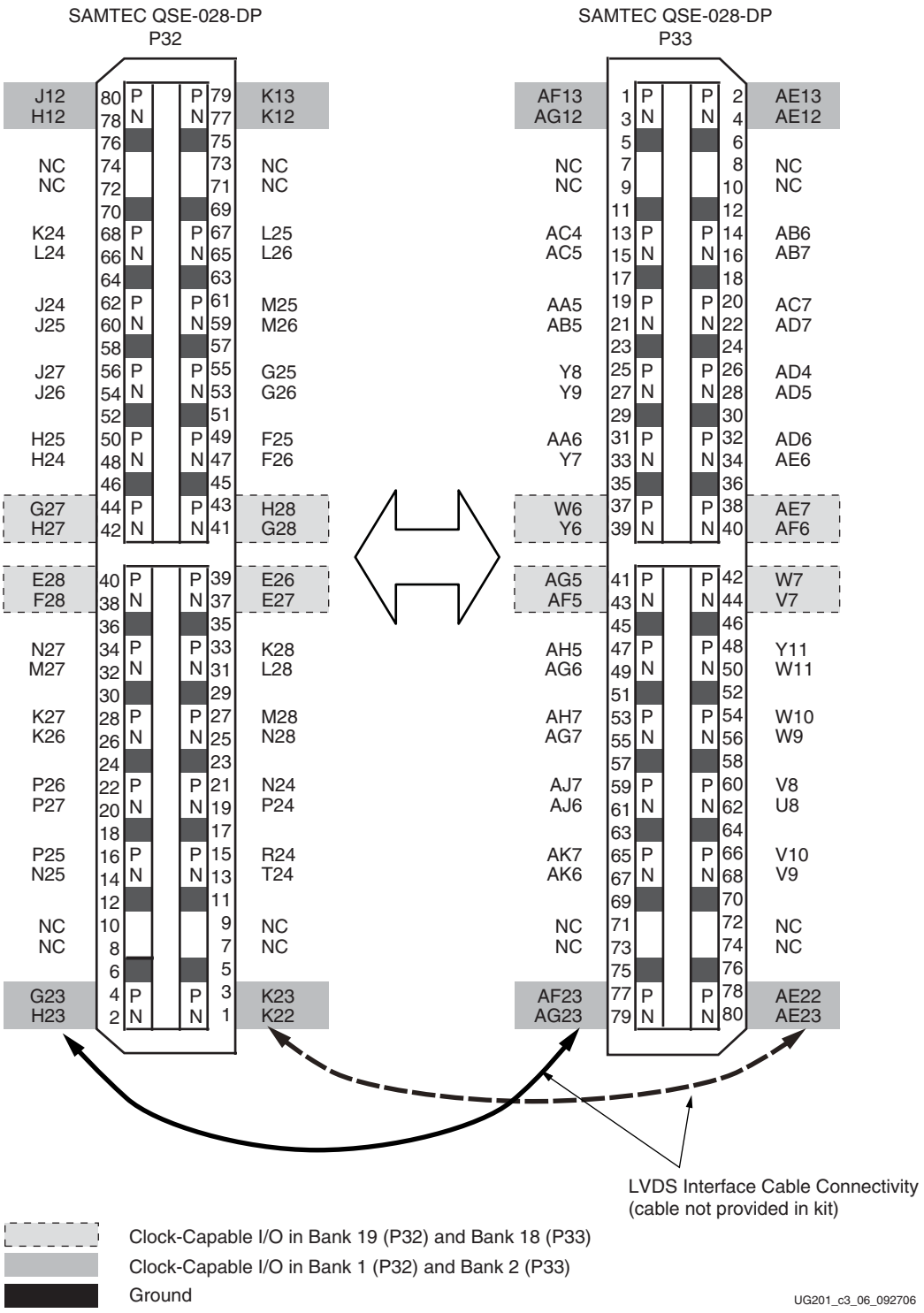

Notes:

1. GPIO channel 0 of P32 connects to GPIO channel 0 of P33 when LVDS interface cable connects P32 to P33.
2. GPIO channel 1 of P32 connects to GPIO channel 1 of P33 when LVDS interface cable connects P32 to P33.
3. NC = No connection.

Figure 3-6: **LVDS Transmit and Receive Connections Between P32 and P33**

SAMTEC Mezzanine Expansion Card Support

The ML555 board supports the addition of mezzanine boards attached to connectors P32 and P33. 5V DC power is provided to the mezzanine board on connector P48 (see Table 3-14). A serial configuration interface is provided on connector P47 (see Table 3-15). The P47 interface is connected to FPGA Bank 1 with a V_{CCO} reference voltage of 2.5V. Figure 3-5, page 45 shows the P47 and P48 mezzanine connectors.

Table 3-14: **Connector P48 Pinout**

Connector Pin	Signal
Pin 1	+5V
Pin 2	GROUND

Table 3-15: **Connector P47 Pinout**

Connector Pin	Signal	FPGA Pin
Pin 1	EXT_SEN	K14
Pin 2	EXT_SDATA	L14
Pin 3	EXT_SCLK	H22
Pin 4	EXT_RESET	G22

Universal Serial Bus Port

The ML555 board provides a connector (P1) for a Universal Serial Bus (USB) port. A USB to RS-232 converter module is provided on the board. The FPGA connection uses standard UART interface protocols, while the external interface is USB 2.0. Device drivers are provided on the reference CD to enable a Microsoft Windows or Linux operating system personal computer to emulate a serial port.

The board uses the Maxim MAX3008EUP (U4) device to convert the RD, TD, RTS, and CTS signals from 3.3V (CP2102 side) to 2.5V (FPGA side) of the interface. The MAX3008 RS-232 interface device operates from a 2.5V supply. The interface between the MAX3008 and the FPGA is at LVCMOS_25 standard levels. The user must provide a UART core internal to the FPGA to enable serial communication between the FPGA and USB attached serial port. UART cores are available from the Xilinx IP center at www.xilinx.com/ipcenter.

Table 3-16 describes the RS-232 interface pin assignments.

Table 3-16: **RS-232 Interface Signal Names and Pin Assignments**

Signal Name	FPGA In/Out	Description	FPGA Pin Number(1)
USB_RX	Out	USB Receive Data (FPGA UART Transmit port)	K21
USB_TX	In	USB Transmit Data (FPGA UART Receive port)	L20
USB_RTS_B	In	USB Request to Send	L21
USB_CTS_B	Out	USB Clear to Send	J22
USB_DSR_B	Out	USB Data Set Ready	K16
USB_DTR_B	In	USB Data Terminal Ready	L15

Table 3-16: **RS-232 Interface Signal Names and Pin Assignments *(Continued)***

Signal Name	FPGA In/Out	Description	FPGA Pin Number(1)
USB_RST_B	In/Out	Active-Low USB Reset (must be held Low for 15 µs to initiate a reset to the USB controller)	J15
USB_SUSPEND_B	In	USB Suspend (output from USB port driven High when the USB controller enters the suspend state)	L16

Notes:

1. These signals are connected to FPGA bank 1. The FPGA reference voltage, V_{CCO}, for this bank is 2.5V. See the ML555 board schematics on the CD-ROM for additional information.

Figure 3-7 is a high-level block diagram of the RS-232 to USB 2.0 interface.

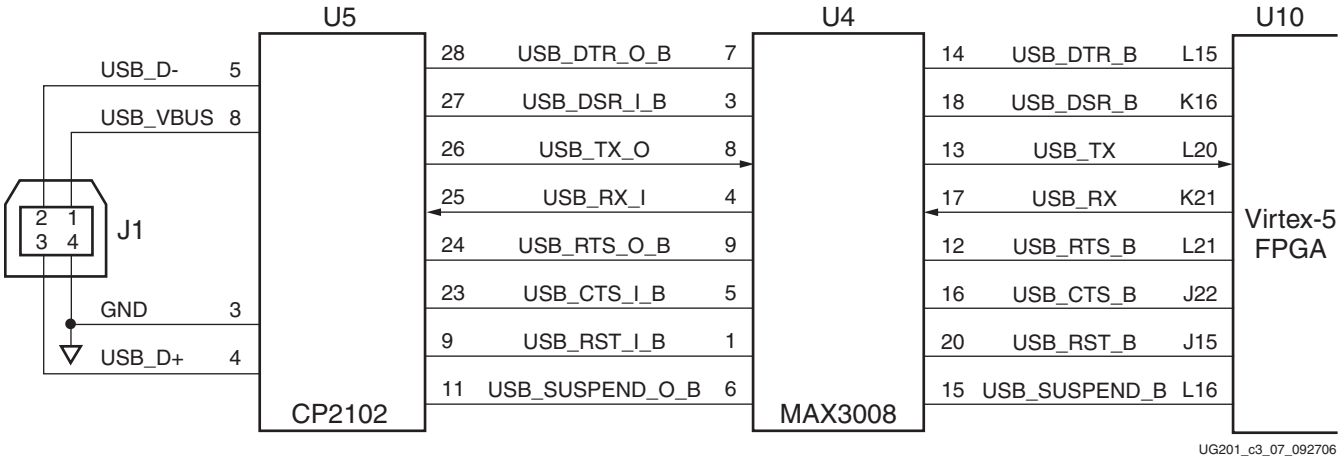

Figure 3-7: **RS-232 Interface Block Diagram**

The USB 2.0 cable is not included in the kit. A USB Type A to USB Type B interface cable is required for ML555 to PC serial communications over the USB interface.

The Platform USB programming cable, included with the Virtex-5 LXT ML555 FPGA Development Kit for PCI Express, PCI-X, and PCI interfaces, contains a USB Type A to USB Type B interface cable. If the Platform USB programming cable is not being used to program devices on the ML555 board, the cable could be used for USB communications between the ML555 board and a host computer.

USB to UART Bridge

The ML555 board contains a CP2102 USB to UART bridge circuit from Silicon Laboratories. The USB 2.0 interface is provided external to the board while the FPGA utilizes a UART interface. The USB interface cable is not provided with the ML555 development kit. USB interface cables are available at many office supply and computer peripheral consumer stores. A USB B-to-A cable is required to interface a PC USB "A" port to the ML555 USB "B" port.

Royalty-free Virtual COM Port (VCP) device drivers are provided by Silicon Laboratories to permit the CP2102 USB to UART bridge to appear as a COM port to the personal computer (PC) application. The UART interface side of the bridge implements all RS-232 interface signals, including control and handshaking signals. The VCP device driver must be installed on the PC prior to attempting to establish communications with the ML555 board. The device driver is on the ML555 CD-ROM. The driver allows the PC USB port to

be configured as a serial COM port for the user to continue working with serial communication utilities like HyperTerminal or Tera Term Pro.

The CP210x USB-to-UART Bridge VCP drivers can be downloaded from the Silicon Laboratories website at:

http://www.silabs.com/tgwWebApp/public/web_content/products/Microcontrollers/en/MCU_Downloads.htm

For technical information and support for the CP210x USB-to-UART bridge controller integrated circuit and the associated VCP device driver, visit the Silicon Laboratories website at www.silabs.com.

The ML555 FPGA must have a UART design instantiated to communicate with the PC on the USB interface. A reference design and/or bit image is included on the CD ROM to permit testing the FPGA to VCP interface. The reference design utilizes the MicroBlaze soft processor and a UART core to communicate to the PC terminal window.

The ML555 board provides a USB Type-B device port connector that is intended to be cabled to the host computer with a USB Type-A port connector.

Table 3-17 describes the USB interface pin assignments.

Table 3-17: **USB Connector Signal Names and Pin Assignments**

USB Connector (J1) Pin	Signal Name	Description
1	VBUS	+5V from HOST system (not used)
2	USB_DATA_N	Bidirectional differential serial data (n-side)
3	USB_DATA_P	Bidirectional differential serial data (p-side)
4	GROUND	Signal ground

Clock Generation

The clock generation section of the ML555 board provides three fixed, two programmable, and two pairs of differential SMA inputs for clock sources:

1. Epson EG-2121CA-125.0000M-LHPAB 2.5V LVDS (differential) oscillator

   125 MHz FPGA oscillator for Gigabit Ethernet

2. Epson SG-8002CA-30.0000M-PCC 3.3V LVCMOS (single-ended) oscillator

   This clock is buffered via U9. It goes to the CPLD and one of the FPGA global clock inputs.

3. Epson EG-2121CA-200.0000M-PHPAB 2.5V LVPECL (differential) oscillator

One pair of SMA clock inputs is connected to the global clock bank, and the other pair of SMA clock inputs is connected to the GTP_DUAL tile X0Y3 MGTREFCLK inputs. The global clock SMA ports can also be used as an output port to route internal debug signals for triggering or viewing on an oscilloscope. Consult the *Virtex-5 FPGA User Guide* for additional information on clocking and the appropriate I/O standards for high-speed clock and data signals.

Table 3-18 lists the destination pins of these clock sources. The PCI bus clock goes to a regional clock input and a global clock input of the FPGA as shown in Table 3-18. The differential 100 MHz reference clock input for PCI Express designs (PCIE_REFCLK{P/N}) is described in "Serial Bus Clocking with Optional ICS874003-02 Clock Jitter Attenuator (PCI Express Operation)," page 60. The two clock synthesizer outputs go to GTP REFCLK inputs as well as global clock inputs.

Table 3-18: **ML555 Board Clock Sources**

Clock Designator	Output	Type	Frequency	Destination Pin
Y1	Differential(1)	LVDS	125 MHz	Refer to Figure 3-8.
Y2	Single-Ended	LVCMOS	30 MHz	Clock Buffer U9 input pin 1 (P) then to FPGA U10 Bank 3 L19 (P). See Figure 4-8, page 100 for 30 MHz clock distribution.
Y3	Differential(1)	LVPECL	200 MHz	FPGA U10 Bank 3 K17 (P) and L18 (N)
P1 pin B16	Single-Ended	PCI 3.3V	33 MHz to 133 MHz	FPGA U10 Bank 3 J14 Global Clock (P) FPGA U10 Bank 3 Regional Clock input pin L34 (P)
U18 Clock Synthesizer 1(3)	Differential(1)	LVDS	31.25 MHz to 700 MHz(2)	Refer to Figure 3-8.
U19 Clock Synthesizer 2(4)	Differential(1)	LVDS	31.25 MHz to 700 MHz(2)	Refer to Figure 3-8.
J10	Differential/ Single-Ended	SMA Input	User-Specified GCLK_P	SMA_GCLKP FPGA U10 Bank 3 Global Clock input pin H17 (P)
J11	Differential only	SMA Input	User-Specified GCLK_N	(*Must not be connected to a single-ended clock*) SMA_GCLKN FPGA U10 Bank 3 Global Clock differential input pin H18 (N)
J12(5)	Differential	SMA Input	User Specified	GTP_DUAL tile X0Y3 MGTREFCLK_P pin P4
J13(5)	Differential	SMA Input	User Specified	GTP_DUAL tile X0Y3 MGTREFCLK_N pin P3
PCIE_REFCLKP	Differential (system board input)	LVDS(6)	100 MHz Spread Spectrum	FPGA U10 GTP_DUAL tile X0Y2 MGTREFCLK_P pin Y4 and FPGA U10 global clock input pin J16 as PCIE_GCLK_P

Table 3-18: **ML555 Board Clock Sources *(Continued)***

Clock Designator	Output	Type	Frequency	Destination Pin
PCIE_REFCLKN	Differential (system board input)	LVDS(6)	100 MHz Spread Spectrum	FPGA U10 GTP_DUAL tile X0Y2 MGTREFCLK_N pin Y3 and FPGA U10 global clock input pin J17

Notes:

1. Differential clock inputs to the FPGA should use the IBUFDS input buffer library primitive. Setting the DIFF_TERM attribute of the IBUFDS to "TRUE" provides 100 Ω on-chip termination for the LVDS clock source driver.
2. The clock synthesizer has a voltage controller oscillator (VCO) that operates in the 250 to 700 MHz range. The VCO output can be divided by 1, 2, 4, or 8 to obtain various clock frequencies.
3. Input reference clock frequency for Clock Synthesizer 1 is 10 MHz. The minimum clock adjustment granularity is 10/8 or 1.25 MHz steps.
4. Input reference clock frequency for Clock Synthesizer 2 is 25 MHz. The minimum clock adjustment granularity is 25/8 or 3.125 MHz steps.
5. When SMA connectors J12 and J13 are used to provide a source clock to GTP_DUAL tile X0Y3 MGTREFCLK, in-line DC blocking capacitors should be placed between the test equipment outputs and SMA clock inputs. AC coupling is recommended for GTP clock inputs. All GTP clock inputs, with the exception of the SMA clock inputs, are AC coupled on the ML555 board assembly.
6. The ML555 board layout provides two methods of interfacing the PCIE_REFCLK to the FPGA. The default method is to AC couple the 100 MHz PCIE_REFCLK directly to the GTP_DUAL tile X0Y2 MGTREFCLK input pins. An alternative method is to remove two 0Ω resistors and install an ICS874003-02 PCI Express Jitter attenuator module, which provides a 100, 125, or 250 MHz reference clock to the GTP transceiver. The jitter attentuator has two LVDS outputs that connect to the GTP and FPGA global clock inputs. One of the jitter attentuator LVDS outputs is connected to the MGTREFCLK inputs of GTP_DUAL tile X0Y2 for PCI Express lanes 0 and 1. The PCIE_REFCLK is also connected to the FPGA global clock network on pins J16 and J17. Internal FPGA clock buffers distribute this clock to other GTP_DUAL tiles for PCI Express operation. The architecture of the FPGA permits an external MGTREFCLK to be driven a maximum of three GTP_DUAL tiles up or down. See "Serial Bus Clocking with Optional ICS874003-02 Clock Jitter Attenuator (PCI Express Operation)," page 60 for additional information.

Figure 3-8 shows a block diagram of the default clock synthesis configuration, provided on production ML555 boards.

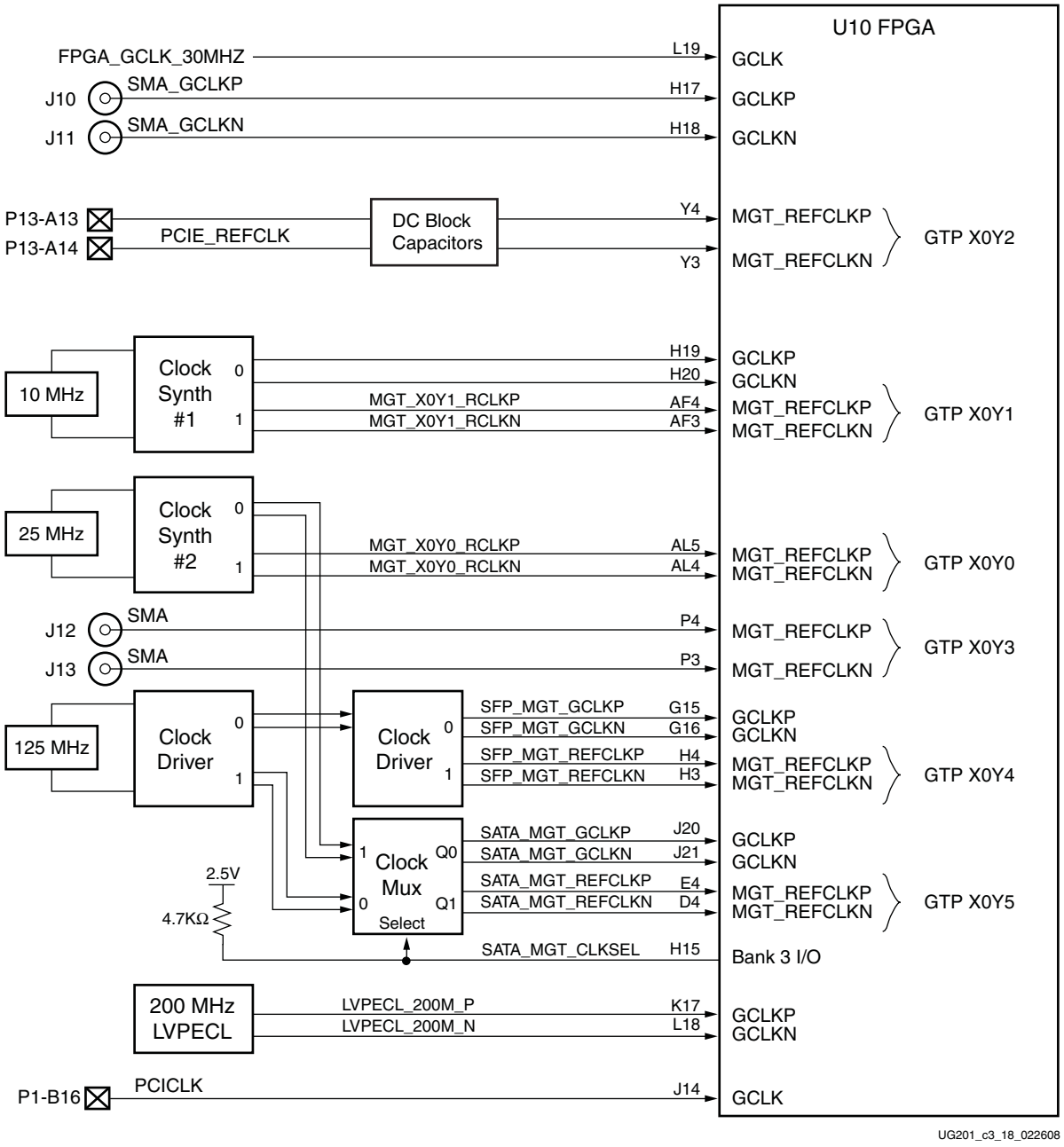

Figure 3-8: **Clock Synthesis Block Diagram (Default Configuration)**

Figure 3-9 shows an optional clock synthesis configuration, which uses an ICS874003 jitter attenuator circuit. Contact your local Xilinx representative for more information on this option.

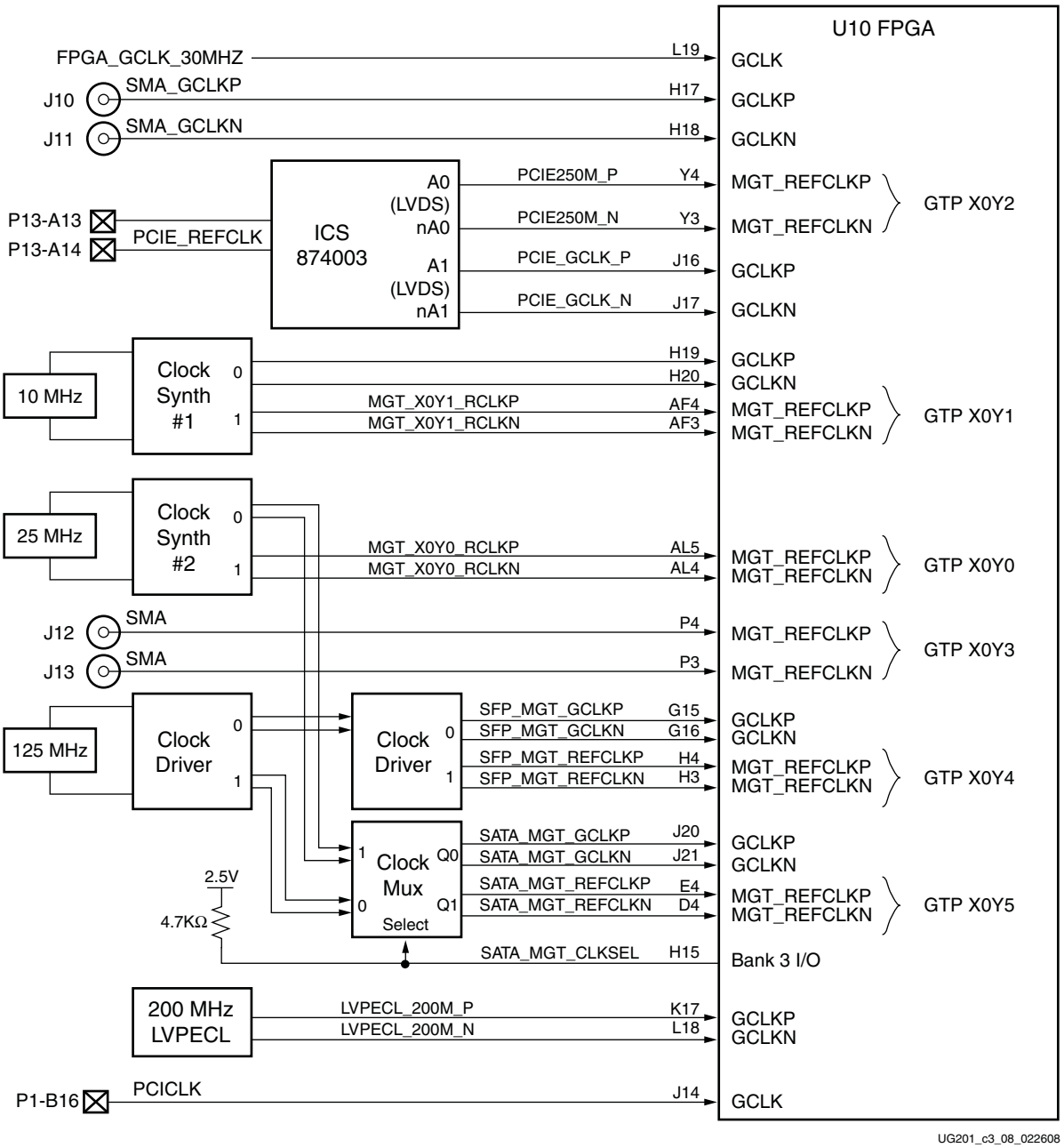

Figure 3-9: **Clock Synthesis Block Diagram (Optional Customer Install Configuration)**

Global Clock Inputs

Global clock inputs to the FPGA are summarized in Table 3-19. Global clocks are connected to FPGA bank 3.

Table 3-19: **FPGA Global Clock Inputs**

FPGA Pins	Signal Name	Clock Source
L18	LVPECL_200M_N	200 MHz LVPECL oscillator Y3
K17	LVPECL_200M_P	200 MHz LVPECL oscillator Y3
H18	SMA_GCLKN(2,5)	SMA Connector J11
H17	SMA_GCLKP(2,5)	SMA Connector J10(3)
H19	LVDSCLKMOD1_P	Clock Synthesizer 1
H20	LVDSCLKMOD1_N	Clock Synthesizer 1
J20(4)	SATA_MGT_GCLKP	Selectable: 125 MHz Oscillator or Clock Synthesizer 2
J21(4)	SATA_MGT_GCLKN	Selectable: 125 MHz Oscillator or Clock Synthesizer 2
G16	SFP_MGT_GCLKN	125 MHz LVDS Oscillator
G15	SFP_MGT_GCLKP	125 MHz LVDS Oscillator
L19	FPGA_GCLK_30MHZ(3)	30 MHz Oscillator
H14	P0_RCLK1(3)	Port 0 Ethernet PHY Receive Clock (if the EPHY daughtercard is installed)
J19	P1_RCLK1(3)	Port 1 Ethernet PHY Receive Clock (if the EPHY daughtercard is installed)
J14	PCIBUSCLK2(3)	P1-B16 active only when the ML555 board is installed in a PCI bus connector. Not active when the ML555 board is installed in a PCI Express connector.
J16(2)	PCIE_GCLK_P	Global clock input available only if an ICS874003-02 PCI Express clock jitter attenuator circuit is installed on the ML555 board at location U16 (not the default board configuration). This clock is 100, 125, or 250 MHz as selected by the CPLD controls. The default is a 250 MHz spread spectrum clock generated from the add-in card PCI Express input clock on connector P13.
J17(2)	PCIE_GCLK_N	Global clock input available only if an ICS874003-02 PCI Express clock jitter attenuator circuit is installed on the ML555 board at location U16 (this is not the default board configuration). This clock is 100, 125, or 250 MHz as selected by the CPLD controls. The default is a 250 MHz spread spectrum clock generated from the add-in card input clock for PCI Express operation on connector P13.
H15(4)	SATA_MGT_CLKSEL	FPGA output used to select the fixed 125 MHz oscillator or the Clock Synthesizer 2 output to be routed to GTP_DUAL tile X0Y5 MGTREFCLK and SMA_MGT_GCLK global clock inputs. The ML555 board has a 4.7KΩ pull-up resistor to 2.5V to provide default selection of clock synthesizer 2 as the output of the Clock Mux block shown in Figure 3-8 and Figure 3-9.

Table 3-19: **FPGA Global Clock Inputs *(Continued)***

FPGA Pins	Signal Name	Clock Source
K18, K19, H13	No connects	Unused global clock inputs to FPGA

Notes:

1. AC coupled.
2. The SMA clock input can be differential or single ended. When driven with a single ended clock source, connector J10 should be used to input the clock to the FPGA. Differential clock inputs to the FPGA should use the IBUFDS input buffer library primitive. Setting the DIFF_TERM attribute of the IBUFDS to TRUE provides 100 Ω on-chip termination for the LVDS clock source driver.
3. Single-ended clock input. All other clocks are differential inputs.
4. Control output port SATA_MGT_CLKSEL on FPGA pin H15:
   (= 0) selects the fixed 125 MHz oscillator output
   (= 1) selects the variable-frequency Clock Synthesizer 2 output
   as the clock source for the differential global clock inputs on FPGA pins J20 and J21.
5. The SMA GCLK ports can be used as outputs to route internal single-ended or differential signals to an oscilloscope for debugging ML555 designs.

GTP Reference Clock Inputs

All GTP REFCLK inputs have clock inputs routed to them. Table 3-20 shows GTP location designators, FPGA pins, and clock sources that drive the reference clock inputs of the GTP transceivers. The lanes are for PCI Express applications.

Table 3-20: **GTP Reference Clock Inputs**

GTP LOC Designator	FPGA Pins(1)	Signal Name(2)	Clock Source(3,4,5)	Application Usage
X0Y0(6)	AL5, AL4	MGT_X0Y0_REFCLK	Clock Synthesizer 2	Lanes 6 and 7
X0Y1(6)	AF4, AF3	MGT_X0Y1_REFCLK	Clock Synthesizer 1	Lanes 2 and 3
X0Y2(6)	Y4, Y3	PCIE_REFCLK(7)	Spread spectrum clock input from PCI Express system unit connector P13. Pins A13 (P) and A14 (N).	Lanes 0 and 1
X0Y3(6)	P4, P3	SMA_GTPCLK	SMA connectors P12 (P) and P13 (N)	Lanes 4 and 5
X0Y4	H4, H3	SFP_MGT_REFCLK	125 MHz Oscillator	SFP1 and SFP2 interfaces
X0Y5	E4, D4	SATA_MGT_REFCLK	Selectable: 125 MHz Oscillator or Clock Synthesizer 2	SATA and SMA interfaces

Notes:

1. GTP REFCLK input pins are listed as differential pairs, MGTREFCLKP and MGTREFCLKN, respectively.
2. Signal names for differential clocking have P/N designators at the end to indicate positive or negative input/output of the differential clock receiver. See the ML555 board schematics and the ML555 FPGA design constraint file on the CD-ROM for additional information.
3. The transceivers can still be utilized using internal clock routing resources, either global or GTP clock buffering. See the *Virtex-5 FPGA RocketIO GTP Transceiver User Guide* for additional information on GTP clocking.
4. Clock Synthesizer 1 is typically utilized to generate the clock for the DDR2 memory.
5. The GTP transceivers can also be clocked using the differential SMA clock inputs, J10 and J11, connected to the global clock inputs.
6. These GTP transceivers are connected to the PCI Express connector J13. The ML555 board supports x1, x4, and x8 lane endpoint PCI Express applications. ES silicon requires specific GTP_DUAL tile connections for 8-lane PCI Express Endpoint applications. Production silicon does not have these restrictions.
7. The 100 MHz differential PCI Express system board spread spectrum clock input goes to GTP MGTREFCLK inputs Y4 and Y3. For multilane PCI Express designs, internal dedicated clock routing resources are used to distribute the PCI Express system clock to GTP_DUAL tiles X0Y0, X0Y1, and X0Y3. See "Serial Bus Clocking with Optional ICS874003-02 Clock Jitter Attenuator (PCI Express Operation)," page 60 for additional information.

PCI Express applications can utilize the system board's 100 MHz clock input on the GTP MGTREFCLK clock input or synthesize a 100 MHz clock using the clock synthesizer, a DCM, and GTP clocking resources. SATA applications must synthesize a 150 MHz clock using Clock Synthesizer 2. Gigabit Ethernet applications can use either the 125 MHz oscillator or a synthesized clock. Fibre channel applications must synthesize either a 53.125 MHz or a 106.25 MHz clock. When using the SFP connectors for Fibre channel and Gigabit Ethernet, the REFCLK for the SFP must be either Fibre channel or Ethernet speed, and the SMA connectors should be used to route either the Fibre channel or Ethernet interface to an offboard connector interface.

The SMA connectors are not AC coupled on the ML555 board, so either internal GTP AC coupling must be enabled or external AC coupling might be required for interfaces to offboard transceivers to be electrically compatible.

Parallel Bus Clocking (PCI Operation)

The PCI specification calls for the PCI bus clock, sourced from the motherboard PCI slot, to have one load on the add-in cards. The LogiCORE solutions for PCI and PCI-X designs, depending upon bus mode and frequency, require that the PCI bus clock enter the FPGA on a specific clock pin (refer to Table 1-1).

The ML555 board PCI bus clock is implemented as follows:

- The PCI bus clock (signal CLK_FROM_EDGE) enters the board on PCI edge connector P1 pin B16.
- The clock is then routed in a "Y" topology to two parallel resistors, R2 and R242.
- The output side of R2 (signal PCIBUSCLK1) is routed to FPGA pin L34 (the regional clock pin of FPGA).
- The output side of R242 (signal PCIBUSCLK2) is routed to FPGA pin J14 (the global clock pin of FPGA).

If full electrical compliance is required, the designer has the option to remove one of the two resistors (R2 or R242). As shipped, the ML555 board has both resistors installed.

Serial Bus Clocking with Optional ICS874003-02 Clock Jitter Attenuator (PCI Express Operation)

By default, the ML555 board connects the PCIE_REFCLK input from the add-in card connector, through two DC blocking capacitors, and then to GTP X0Y2 MGTREFCLK pins Y4 and Y3.

The ML555 board layout accommodates end-user installation of an ICS874003-02 PCI Express Clock Jitter attenuator module as shown in Figure 3-10. The ICS device should be installed in board location U16, and series resistors R450 and R451 need to be removed from the board assembly. Contact Integrated Devices Technology (IDT) for information and availability of clock jitter attenuator circuits at www.idt.com.

The PCI Express system clock is an ICS874003-02 clock jitter attenuator circuit. The ICS device has dual LVDS outputs, one of which is connected to GTP_DUAL tile X0Y2 MGTREFCLK and the other is connected to FPGA global clock input pins J16 and J17. The jitter attenuator can generate either a 100 MHz or a 250 MHz reference clock for the GTP transceiver and clock management tile (CMT) within the FPGA.

Figure 3-10 shows the connections from the PCI Express connector to the jitter attenuator and then to the FPGA. The CPLD image provided with the ML555 board by default selects a 250 MHz reference clock to be generated by the ICS874003-02. Spare I/O from the FPGA to CPLD could be used to dynamically select different GTP reference clocks to be generated by the jitter attentuator circuit. Source code for the CPLD design provided with the ML555 board is included on the CD-ROM.

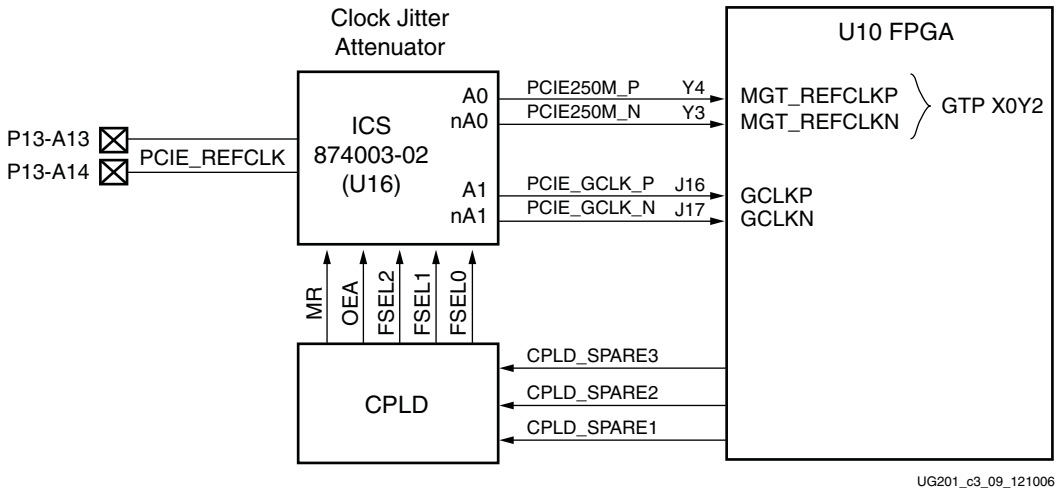

Figure 3-10: **PCI Express Clocking and Control**

Spread spectrum clocking is supported by routing the system board clock into the transceiver and then generating a local clock for the FPGA design. The external clock from one GTP_DUAL tile can be used to drive the CLKIN ports of neighboring tiles. A GTP_DUAL tile shares its clock with its neighbors using dedicated internal clock routing resources. Refer to the *Virtex-5 FPGA RocketIO GTP Transceiver User Guide* for additional information on clocking resources.

Clock Synthesizers

The ML555 board contains two clock synthesizer circuits that support a wide range of frequency synthesis capabilities for end-user applications. One of the clock synthesizers should be used to generate the clock for the DDR2 SODIMM memory. The second clock synthesizer can be used to generate the reference clock for the GTP transceivers. Two Integrated Circuit Systems (ICS) ICS8442 Crystal Oscillator to Differential LVDS Frequency Synthesizer devices are on the board, each with a different crystal oscillator reference clock.

The ICS8442 device has the following features:

- Dual differential LVDS outputs
- Output frequency range: 31.25 MHz to 700 MHz
- Crystal input frequency range: 10 MHz to 25 MHz
- VCO operating range: 250 MHz to 700 MHz
- Parallel or serial interface for programming multiplier and output dividers
- RMS period jitter: 2.7 ps (typical)
- Cycle to cycle jitter: 18 ps (typical)

The complete data sheet for the ICS8442 device is available online at http://www.idt.com/products/getDoc.cfm?docID=6914275

The synthesizer multiplies the reference clock input by a selectable multiplier. The VCO operates (locks) in a range from 250 to 700 MHz. The VCO output is routed through a programmable divider to generate the desired output frequency. The supported VCO frequency divisors are 1, 2, 4, or 8. The resultant clock from the divisor block is then routed to differential output drivers.

The clock synthesizer can be programmed in either parallel or serial mode. *Parallel mode requires the user to set two DIP switches on the ML555 board, and then press and release a pushbutton switch to load the desired configuration into the ICS8442*. Serial configuration is accomplished using the FPGA to transmit serial data, clock, and controls to the synthesizer. A reference design to program the ICS clock synthesizers using the FPGA to ICS8442 serial configuration interface is provided on the reference CD-ROM included with the ML555 kit.

The output frequency of the synthesizer is M times the input reference clock frequency, provided that the internal VCO is locked. An eight-position DIP switch selects the multiplier value, M. M can be any decimal value from 0 to 511. There are values of M where the VCO will not obtain frequency lock. The relationship between the input clock (F_{XTAL}) and the VCO frequency is given by the equation:

$$F_{VCO} = F_{XTAL} \times M$$

The VCO can be divided by an integer value 1, 2, 4, or 8 using the DIP switches as shown in Table 3-21.

The frequency output of the clock synthesizer is given by the equation:

$$F_{OUT} = F_{VCO}/N = F_{XTAL} \times M/N \text{ (provided the VCO is locked)}$$

Table 3-21: **ICS8442 Divisor Switch Settings**

SW12-9 or SW12-10(2) "N1"	SW10-9 or SW12-11(3) "N0"	Output Divisor Value	Output Frequency (MHz)	
			Minimum	Maximum
0	0	1	250	700
0	1	2	125	350
1	0	4	62.5	175
1	1	8	31.25	87.5

Notes:

1. A logic "0" is obtained by moving the switch to the "OPEN" position, and a logic "1" is obtained by moving the switch to the "CLOSED" position.
2. SW12-9 is for the N1 input of Clock Synthesizer 1, and SW12-10 is for the N1 input of Clock Synthesizer 2.
3. SW10-9 is for the N0 input of Clock Synthesizer 1, and SW12-11 is for the N0 input of Clock Synthesizer 2.

Parallel Mode Operation

Each clock synthesizer has one set of subminiature DIP switches to set the multiplier and divider settings in parallel mode. Clock Synthesizer 1, with a 10 MHz reference clock input, can be set to `0x019` through `0x046`, as shown in Table 3-22, page 64. Clock Synthesizer 2, with a 25 MHz reference clock input, can be set to `0x00A` through `0x01C`, as shown in Table 3-23, page 66. DIP switches are provided on the board to allow user selection of multiplier values that result in valid VCO lock ranges. Multiplier bits that would result in a VCO unlock condition are hardwired to a logic 0 level on the board.

Figure 3-11 shows the locations of the switches for both synthesizers.

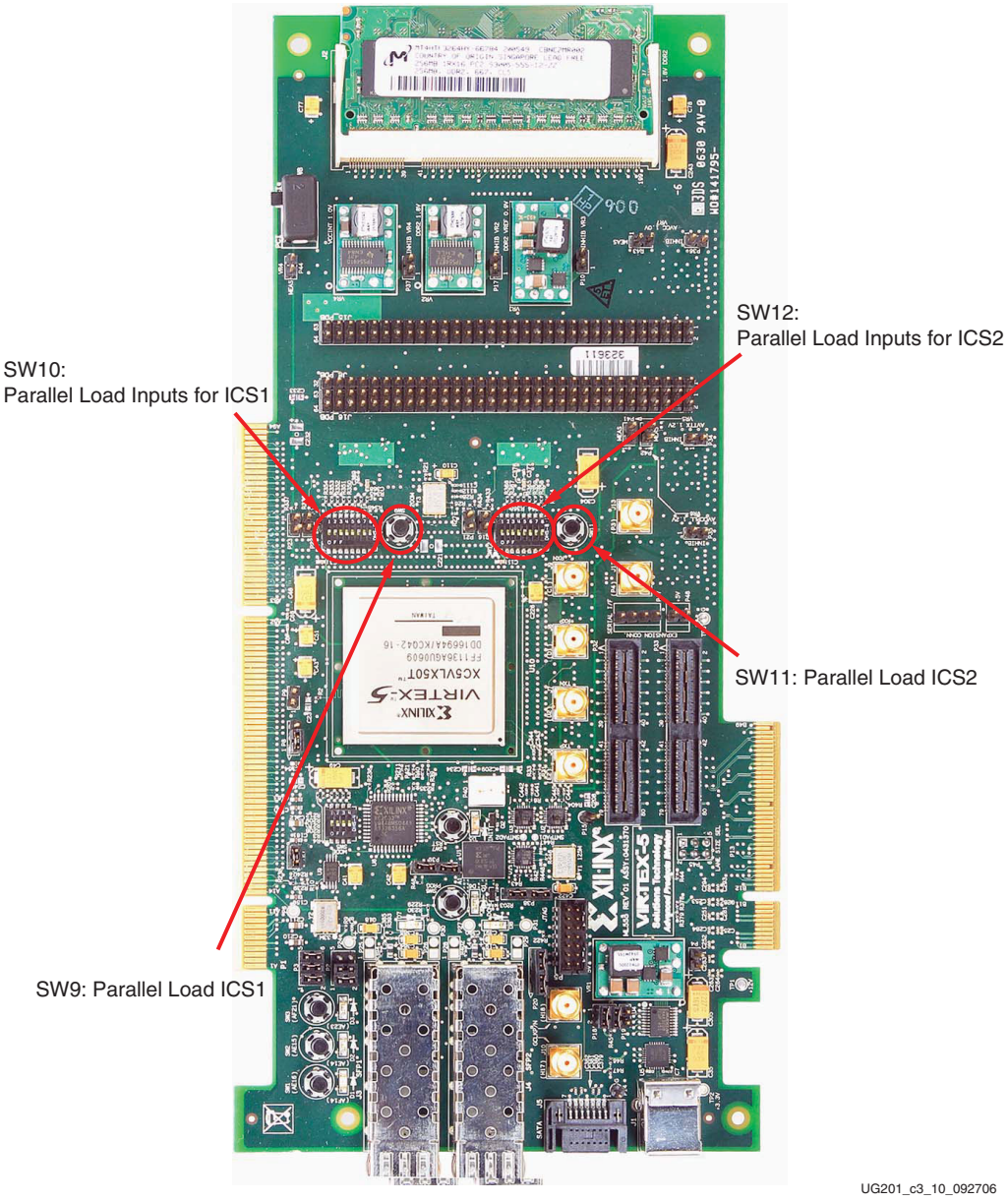

Figure 3-11: **Clock Synthesizer Switches (Parallel Mode)**

Pushbutton switch SW9 is used to parallel-load the multiplier and divisor selections for Synthesizer 1 (U8), and switch SW11 is used to parallel-load the multiplier and divisor DIP switch settings into Synthesizer 2 (U7). Clock synthesizer outputs are not guaranteed to be in a known state after a power-on cycle. To establish a known clock frequency output using the parallel mode, the switches must be configured to a valid operating range and then the SW9 and SW11 pushbutton switches must be pressed and released. The clock synthesizer can also be configured using FPGA outputs. The "Serial Mode Operation" section provides additional information.

Table 3-22 and Table 3-23 show all possible values that can be generated by the clock synthesizer circuit. Table 3-22 shows the clock synthesis ranges with a 10 MHz reference clock input for Clock Synthesizer 1. There are ranges below and above the VCO operating range, which must never be selected by the user, where the VCO does not lock and an

output clock is not deterministic. Only one output frequency can be generated based upon the divisor selection.

Table 3-22: **Clock Synthesizer 1 Frequency Output for Multiplier/Divider Values with a 10 MHz Input Clock**

Multiplier Input Selection (hex)		VCO Lock Frequency Range (MHz)	Output Frequency (MHz) with Divisor = 1 N[1:0]=00b	Output Frequency (MHz) with Divisor = 2 N[1:0]=01b	Output Frequency (MHz) with Divisor = 4 N[1:0]=10b	Output Frequency (MHz) with Divisor = 8 N[1:0]=11b
M8	M[7:0]					
0	0x00 – 0x18	Will not LOCK	N/A	N/A	N/A	N/A
0	19	250	250	125	62.5	31.25
0	1A	260	260	130	65	32.5
0	1B	270	270	135	67.5	33.75
0	1C	280	280	140	70	35
0	1D	290	290	145	72.5	36.25
0	1E	300	300	150	75	37.5
0	1F	310	310	155	77.5	38.75
0	20	320	320	160	80	40
0	21	330	330	165	82.5	41.25
0	22	340	340	170	85	42.5
0	23	350	350	175	87.5	43.75
0	24	360	360	180	90	45
0	25	370	370	185	92.5	46.25
0	26	380	380	190	95	47.5
0	27	390	390	195	97.5	48.75
0	28	400	400	200	100	50
0	29	410	410	205	102.5	51.25
0	2A	420	420	210	105	52.5
0	2B	430	430	215	107.5	53.75
0	2C	440	440	220	110	55
0	2D	450	450	225	112.5	56.25
0	2E	460	460	230	115	57.5
0	2F	470	470	235	117.5	58.75
0	30	480	480	240	120	60
0	31	490	490	245	122.5	61.25
0	32	500	500	250	125	62.5
0	33	510	510	255	127.5	63.75
0	34	520	520	260	130	65

Table 3-22: **Clock Synthesizer 1 Frequency Output for Multiplier/Divider Values with a 10 MHz Input Clock *(Continued)***

Multiplier Input Selection (hex)		VCO Lock Frequency Range (MHz)	Output Frequency (MHz) with Divisor = 1 N[1:0]=00b	Output Frequency (MHz) with Divisor = 2 N[1:0]=01b	Output Frequency (MHz) with Divisor = 4 N[1:0]=10b	Output Frequency (MHz) with Divisor = 8 N[1:0]=11b
M8	M[7:0]					
0	35	530	530	265	132.5	66.25
0	36	540	540	270	135	67.5
0	37	550	550	275	137.5	68.75
0	38	560	560	280	140	70
0	39	570	570	285	142.5	71.25
0	3A	580	580	290	145	72.5
0	3B	590	590	295	147.5	73.75
0	3C	600	600	300	150	75
0	3D	610	610	305	152.5	76.25
0	3E	620	620	310	155	77.5
0	3F	630	630	315	157.5	78.75
0	40	640	640	320	160	80
0	41	650	650	325	162.5	81.25
0	42	660	660	330	165	82.5
0	43	670	670	335	167.5	83.75
0	44	680	680	340	170	85
0	45	690	690	345	172.5	86.25
0	46	700	700	350	175	87.5
0	0x47 – 0xFF	Will not LOCK	N/A	N/A	N/A	N/A
1	0x00 – 0xFF					

Table 3-23 shows the clock synthesis ranges possible with different selections of multiplier M and divisor N inputs to the ICS8442 device with a 25 MHz reference clock input for Clock Synthesizer 2.

Table 3-23: **Clock Synthesizer 2 Frequency Output for Multiplier/Divider Values with a 25 MHz Input Clock**

Multiplier Input Selection (hex)		VCO Lock Frequency Range (MHz)	Output Frequency (MHz) with Divisor = 1 N[1:0]=00b	Output Frequency (MHz) with Divisor = 2 N[1:0]=01b	Output Frequency (MHz) with Divisor = 4 N[1:0]=10b	Output Frequency (MHz) with Divisor = 8 N[1:0]=11b
M8	M[7:0]					
0	0x00 – 0x09	Will not LOCK	N/A	N/A	N/A	N/A
0	0A	250	250	125	62.5	31.25
0	0B	275	275	137.5	68.75	34.375
0	0C	300	300	150	75	37.5
0	0D	325	325	162.5	81.25	40.625
0	0E	350	350	175	87.5	43.75
0	0F	375	375	187.5	93.75	46.875
0	10	400	400	200	100	50
0	11	425	425	212.5	106.25	53.125
0	12	450	450	225	112.5	56.25
0	13	475	475	237.5	118.75	59.375
0	14	500	500	250	125	62.5
0	15	525	525	262.5	131.25	65.625
0	16	550	550	275	137.5	68.75
0	17	575	575	287.5	143.75	71.875
0	18	600	600	300	150	75
0	19	625	625	312.5	156.25	78.125
0	1A	650	650	325	162.5	81.25
0	1B	675	675	337.5	168.75	84.375
0	1C	700	700	350	175	87.5
0	0x1D – 0xFF	Will not LOCK	N/A	N/A	N/A	N/A
1	0x00 – 0xFF					

Table 3-24 shows the board DIP switch settings for the two clock synthesizer circuits and the switch positions assigned for the M and N constants. When the switch is in the ON position, a logic "1" is obtained, and in the OFF position, a logic "0" is obtained. Figure 3-12 shows a graphic representation of the DIP switches and indicates which switch positions are used for the M and N input values to the clock synthesizers. When the switch is in the OFF position a logic 0 is selected. When the switch is not in the OFF position, a logic 1 is selected. ICS1 input N1 is located on SW12 position 8. Figure 3-12 shows two examples: one with ICS1 generating a 330 MHz clock and the other with ICS2 generating a 150 MHz clock.

Table 3-24: **M and N Constant Values Set Through ML555 DIP Switch Configuration**

Switch Position	Synthesizer Circuit 1	Synthesizer Circuit 2
Parallel Load Pushbutton(1)	SW9	SW11
N1	SW12 pins 8-9	SW12 pins 7-10
N0	SW10 pins 8-9	SW12 pins 6-11
M8	Tied to logic 0	Tied to logic 0
M7	Tied to logic 0	Tied to logic 0
M6	SW10 pins 7-10	Tied to logic 0
M5	SW10 pins 6-11	Tied to logic 0
M4	SW10 pins 5-12	SW12 pins 5-12
M3	SW10 pins 4-13	SW12 pins 4-13
M2	SW10 pins 3-14	SW12 pins 3-14
M1	SW10 pins 2-15	SW12 pins 2-15
M0	SW10 pins 1-16	SW12 pins 1-16

Notes:

1. The parallel load pushbutton switch must be pressed and released to perform a parallel load of the synthesizer. Alternatively, the FPGA PLOAD1 or PLOAD2 output can be asserted and deasserted to perform a parallel load without having to press and release the pushbutton switch associated with the clock synthesizer.

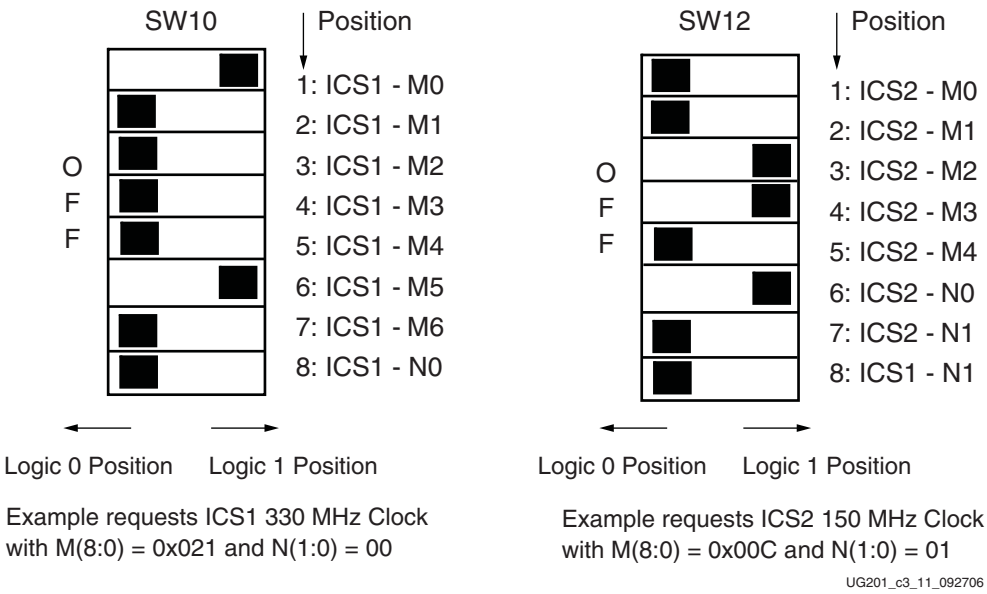

Figure 3-12: **Clock Synthesizer Parallel Load Switch Settings**

Serial Mode Operation

The FPGA provides interface signals to program each synthesizer in serial mode. Table 3-25 lists the FPGA outputs and pin assignments that connect directly to the ICS8442 clock synthesizer control inputs. A reference design is provided on the CD to demonstrate serial programming of the clock synthesizer modules from the FPGA.

Table 3-25: **FPGA Signals for Serial Programming of the Clock Synthesizer Modules**

Signal	Description	FPGA Pin(1)	FPGA In/Out
PLOAD_1	ICS8442 parallel load input used to parallel-load the multiplier and divider switch inputs to the device. A pushbutton switch is provided on the ML555 board to permit the user to load the settings into the synthesizer. This signal must be a logic “0” level for serial mode operation.	AP32	Output
STROBE_1	ICS8442 serial load input used to load serialized multiplier and divisor constants into the ICS8442. Asserted to perform serial to parallel loading for user-defined clock synthesis. This signal should be deasserted during serial data clocking, asserted, and then deasserted for one clock cycle to complete the serial to parallel loading of the data into the device.	AN33	Output
SDATA_1	This signal contains the ICS8442 serial data input. The serial data is provided in the sequence T1, T0, NULL, N1, N0, M8, M7, M6, M5, M4, M3, M2, M1, and finally M0. The ICS8442 data sheet provides a serial loading timing diagram and definitions for serial data bits.	AN34	Output
SCLOCK_1	The ICS8442 serial clock input should only be active during serial loading of the synthesizer. The clock should be deasserted at all other times. Data is clocked into the ICS8442 on the rising edge of the SCLOCK. The ICS8442 data sheet provides a serial loading timing diagram and definitions for serial data bits.	AM32	Output

Table 3-25: **FPGA Signals for Serial Programming of the Clock Synthesizer Modules *(Continued)***

Signal	Description	FPGA Pin(1)	FPGA In/Out
LVDSCLKMOD1_P	Clock Synthesizer 1 clock outputs. See Figure 3-8 for a schematic representation of the clock network on the ML555 board.	H19	Input
LVDSCLOCKMOD1_N		H20	Input
MGT_X0Y1_RCLKP		AF4	Input
MGT_X0Y1_RCLKN		AF3	Input
PLOAD_2	ICS8442 parallel load input used for parallel loading of multiplier and divider switch inputs to the device. A pushbutton switch is provided on the ML555 board to permit the user to load the settings into the synthesizer. This signal is asserted to perform a parallel load operation. For serial configuration of the ICS8442, this signal should always be deasserted (inactive).	AM33	Output
STROBE_2	ICS8442 serial load input used to load serialized multiplier and divisor constants into the ICS8442. Asserted to perform serial to parallel loading for user-defined clock synthesis. This signal should be deasserted during the serial data clocking, asserted, and then deasserted for one clock cycle to complete the serial to parallel loading of the data into the device.	AL34	Output
SDATA_2	This signal contains the ICS8442 serial data input. The serial data is provided in the sequence T1, T0, NULL, N1, N0, M8, M7, M6, M5, M4, M3, M2, M1, and finally M0. The ICS8442 data sheet provides a serial loading timing diagram and definitions for serial data bits.	AK32	Output
SCLOCK_2	The ICS8442 serial clock input should only be active during serial loading of the synthesizer. The clock should be deasserted at all other times. Data is clocked into the ICS8442 on the rising edge of the SCLOCK. The ICS8442 data sheet provides a serial loading timing diagram and definitions for serial data bits.	AJ32	Output
LVDSCLKMOD2_P(2)	The Clock Synthesizer 2 clock outputs go through clock multiplexer U3, which connects to the FPGA global clock and the GTP REFCLK inputs. See Figure 3-8 for a schematic representation of the clock network on the ML555 board.	J20, E4	Input
LVDSCLKMOD2_N(2)		J21, D4	Input
MGT_X0Y0_RCLKP		AL5	Input
MGT_X0Y0_RCLKN		AL4	Input

Notes:

1. These FPGA output signals are connected to FPGA bank 13. The reference voltage, V_{CCO}, for this bank is 3.0V. See the ML555 board schematics on the CD-ROM for additional information. The clock synthesizer clocks are not connected to FPGA bank 13.
2. The LVDSCLKMOD_2 differential clock is connected to a differential clock multiplexer. The output of the multiplexer goes to FPGA global clock inputs J20(P) and J21(N) and MGT_X0Y5 MGTREFCLK inputs E4 and D4.

Figure 3-13 is a timing diagram showing the serial and parallel programming modes of operation. The parallel mode has priority over serial mode.

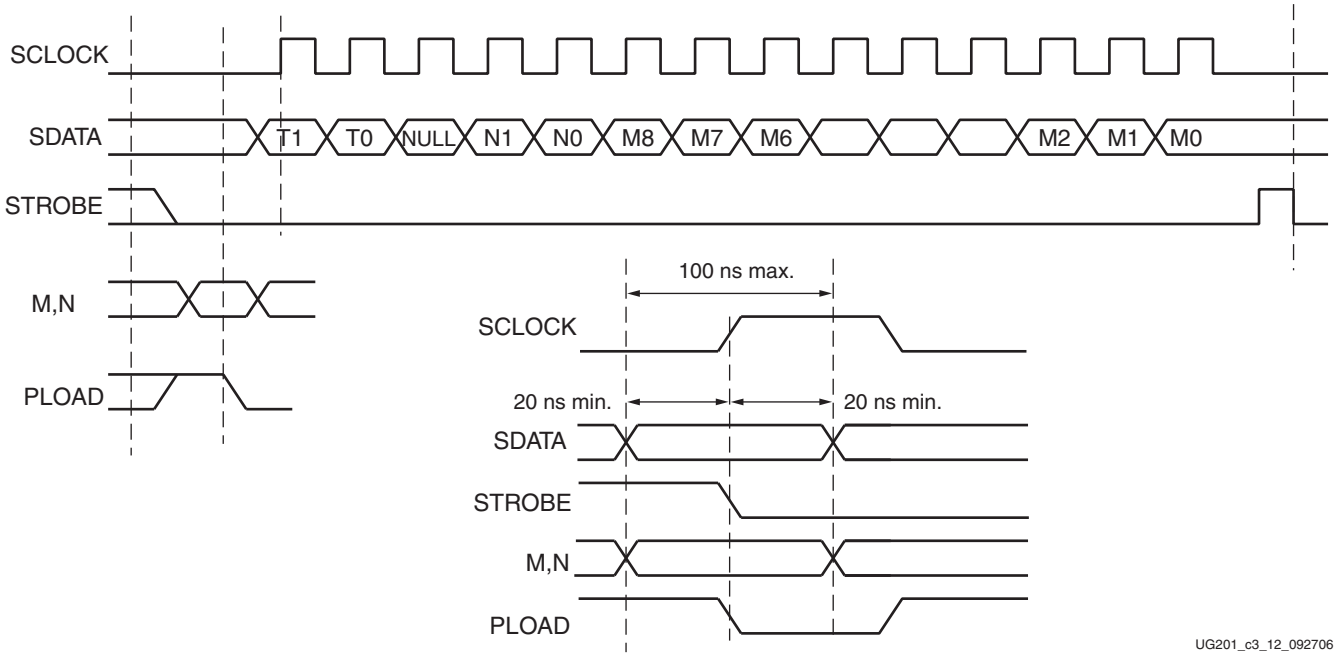

Figure 3-13: **Serial Configuration Interface Timing**

Clock-Capable I/O Pins Associated with Clock Inputs

Some clock-capable input and output pins of the FPGA are connected to clocking sources on the ML555 board. Table 3-26 summarizes these FPGA clock capable inputs and outputs, along with their FPGA bank numbers and I/O bank reference voltages.

Table 3-26: **FPGA Clock-Capable I/O Connectivity**

Signal Name	FPGA Pin	FPGA Bank	Bank V_{CCO} (Volts)	Function
PCIBUSCLK1	L34	11	3.0	Regional PCI bus applications
FPGA_CLK_30MHZ	AD32	13	3.0	User defined
GPIO2_I10_N	V7	18	2.5	User-defined LVDS general-purpose I/O interface
GP1O2_I10_P	W7			
GPIO2_I11_N	AF5			
GP1O2_I11_P	AG5			
GPIO2_I12_N	AF6			
GP1O2_I12_P	AE7			
GPIO2_I13_N	Y6			
GP1O2_I13_P	W6			

Table 3-26: **FPGA Clock-Capable I/O Connectivity *(Continued)***

Signal Name	FPGA Pin	FPGA Bank	Bank V_{CCO} (Volts)	Function
GPIO1_I10_N	E27	19	2.5	User-defined LVDS general-purpose I/O interface
GP1O1_I10_P	E26			
GPIO1_I11_N	F28			
GP1O1_I11_P	E28			
GPIO1_I12_N	G28			
GP1O1_I12_P	H28			
GPIO1_I13_N	H27			
GP1O1_I13_P	G27			
GPIO1_I00_N	K22	1	2.5	User-defined LVDS general-purpose I/O interface
GPIO1_I00_P	K23			
GPIO1_I01_N	H23			
GP1O1_I01_P	G23			
GPIO1_I22_N	K12			
GP1O1_I22_P	K13			
GPIO1_I23_N	H12			
GPIO1_I23_P	J12			
GPIO2_I00_N	AE23	2	2.5	User-defined LVDS general-purpose I/O interface
GPIO2_I00_P	AE22			
GPIO2_I01_N	AG23			
GP1O2_I01_P	AF23			
GPIO2_I22_N	AE12			
GP1O2_I22_P	AE13			
GPIO2_I23_N	AG12			
GPIO2_I23_P	AF13			
P0_RXC_RXCLK	H7	12	2.5	Ethernet PHY clocks from daughtercard HW-AFX-BERG-EPHY
P0_TXC_GTXCLK	T8			
P1_TXC_GTXCLK	K8	20	2.5	Ethernet PHY clocks from daughtercard HW-AFX-BERG-EPHY
P1_RXC_RXCLK	J10			
CPLD_SPARE1	B12			User defined
CPLD_SPARE2	A13			
PCIW_EN	C13			Potential dynamic reconfiguration request or other user-defined application using a core for PCI operation
RTR	B13			

Table 3-26: **FPGA Clock-Capable I/O Connectivity *(Continued)***

Signal Name	FPGA Pin	FPGA Bank	Bank V_{CCO} (Volts)	Function
DQS2_B	AA30	17	1.8	DDR2 memory data strobes for data bytes 2, 1, and 0
DQS2	AA29			
DQS1_B	AC30			
DQS1	AB30			
DQS0_B	AA31			
DQS0	AB31			
DQS5_B	AJ26	21	1.8	DDR2 memory data strobes for data bytes 5, 4, and 3
DQS5	AH27			
DQS4_B	AK27			
DQS4	AK28			
DQS3_B	AJ29			
DQS3	AK29			
DQS7_B	AJ11	22	1.8	DDR2 memory data strobes for data bytes 7 and 6
DQS7	AK11			
DQS6_B	AD11			
DQS6	AD10			
SCL	AE8			DDR2 SODIMM serial clock for presence detection synchronization with the SDA bidirectional data signal

IDELAYCTRL Reference Clock Generation

A 200 MHz reference clock for the IDELAYCTRL block is required if the user application uses the IOB variable delay elements. The ML555 board provides a dedicated 200 MHz LVPECL_25 oscillator on the board connected to the global clock inputs as shown in Table 3-19, page 57. The IDELAYCTRL reference clock can alternately be generated within the FPGA or using one of the clock synthesizers on the board. There are three methods to generate the reference clock, depending on application usage:

1. Using a DCM with the DCM CLKFX output:
   - The ML555 30 MHz clock input is used on GCLK pin L19 as the DCM clock input.
   - The 125 MHz clock input is used through the U2 clock multiplexer GCLK inputs, G15(P) and G16(N), as the DCM clock input.
   - The 125 MHz clock input is used through the clock driver GCLK inputs, J20(P) and J21(N), as the DCM clock input.
2. Using an external signal generator and connecting the signal generator outputs, either single-ended or differential to the ML555 SMA clock inputs J10 (GCLKP H17) and J11 (GCLKN H18). The frequency generator output is set to the desired frequency. A DCM is not required for this method of generating the IDELAYCTRL reference clock.

3. Using one of the clock synthesizer chips. If using the parallel input mode, SW9 and/or SW11 must be pressed and released to obtain a known output frequency from the clock synthesizers after a power-on cycle.
   - Typically, CLOCK_SYNTH1 is reserved for the DDR2 memory clock generation. If the DDR2 memory is not used or the clock frequency for the DDR2 memory is 200 MHz, this clock can be used for 200 MHz clock generation. The ML555 board supports DDR2-400, DDR2-533, and DDR2-667 rates.
   - CLOCK_SYNTH2 routed through the U3 clock mux goes to GCLK_P J20 and GCLK_N J21. The SATA_MGT_CLKSEL output port on FPGA pin H15 must be set to either a logic 1 level to select the Clock Synthesizer 2 as the clock source or a logic 0 level to select the fixed 125 MHz LVDS clock source as input to the global clock pins. Depending on which GTP elements are used in the design, the second clock synthesizer might be available for IDELAYCTRL reference clock.

User LEDs

The ML555 board provides three user LEDs that can be turned ON by driving the LED signals to Ground. Table 3-27 lists the FPGA pin assignments.

Table 3-27: **User LED Pin Assignments**

LED Signal	Designation	FPGA Pin Number(1) (FF1136 Package)
USER_LED0	USER1 D1	H8
USER_LED1	USER2 D2	G8
USER_LED2	USER3 D3	G10

Notes:

1. These signals are connected to FPGA bank 20. The FPGA reference voltage, V_{CCO}, for this bank is 2.5V. See the ML555 board schematic on the CD-ROM for additional information.

Configuration INIT and DONE LEDs

The ML555 board provides INIT and DONE indicator LEDs, that are turned ON by the FPGA during the configuration process. The FPGA INIT pin (N14) drives the INIT LED (D5) buffer transistor (Q2). The FPGA DONE pin (M15) drives the DONE LED (D6) buffer transistor (Q1). Table 3-28 lists the FPGA pin assignments.

Table 3-28: **Configuration INIT and DONE LED Pin Assignments**

LED	Designation	FPGA Pin Number(1) (FF1136 Package)
FPGA_INIT	D5 INIT	N14
FPGA_DONE	D6 DONE	M15

Notes:

1. These signals are connected to FPGA configuration bank 0. The FPGA reference voltage for this bank is 2.5V. See the ML555 board schematics on the CD-ROM for additional information.

User Pushbutton Switches

The ML555 board provides three user pushbutton switches. The switch outputs are pulled up to 2.5V using 4.7 KΩ resistors on the board. The pushbuttons generate a switch closure to GND when pressed. Switch contact debounce logic must be implemented inside the FPGA. Table 3-29 lists the FPGA pin assignments.

Table 3-29: **User Pushbutton Switch Assignments**

Pushbutton Switch Signal	Description	FPGA Pin Number(1) (FF1136 Package)
USER_SW0	USER1 SW1	AF21
USER_SW1	USER2 SW2	AF20
USER_SW2	USER3 SW3	AF14

Notes:

1. These signals are connected to FPGA bank 2. The FPGA reference voltage, V_{CCO}, for this bank is 2.5V. See the ML555 board schematics on the CD-ROM for additional information.

Pushbutton Program Switch (SW6)

The ML555 board provides a pushbutton program switch for initiating reconfiguration of the Virtex-5 FPGA. A CPLD image is provided with the ML555 board to enable pressing and releasing the program pushbutton switch (SW6) to initiate a full FPGA device configuration cycle while the board is powered on. The CPLD design files and bit image are on the reference CD included in the kit. Pressing this switch causes the FPGA to clear its internal configuration memory and then load the currently selected image (via the P3 image select jumper block) from the Platform Flash (U1 and U15). See Table 4-6, page 98 for additional information on P3 selection of stored FPGA bitstream images.

Pushbutton Reset Switch (SW7)

The ML555 board provides a pushbutton switch SW7 for a user-assigned function. This switch, labelled RESET, is wired to the CPLD U6 pin 18 (general-purpose I/O pin). The switch output is connected by a 4.7 KΩ pull-up resistor to 2.5V. This pushbutton generates a switch closure to GND when pressed. Switch contact debounce logic must be implemented inside the CPLD. There are multiple connections between the CPLD U6 and the FPGA U10 to transmit SW7 activity.

Power Consumption

The PCI specification outlines the power consumption limitations for PCI add-in boards. The maximum allowable power consumption across all power rails (+5V, +3.3V, +12V, -12V) is 25W.

On the PCI connector two signals allow the power demand of a board to be specified.

The PRSNT[1:2]# signals are used by a system board to detect if an add-in card is physically present in the slot and the total power requirements of the add-in card. The signals are required for the add-in card but are optional for the system board. The ML555 board uses the EDGE_PRSNT1# and EDGE_PRSNT2# signals to request the maximum 25W power limit by grounding PRSNT1# and leaving PRSNT2# open. The SKT_PRSNT[1:2]# signals on the PCI-X expansion socket (J1) are routed to the FPGA for sensing.

Voltage Regulators

The ML555 board is powered from either the PCI slot that it is plugged into, utilizing the +5V and the +3.3V power rails (see Table 3-4 for the specific power pins within the PCI edge connector pinout), or the PCI Express slot that it is plugged into utilizing the +3.3V and +12V power rails.

ML555 DC Power System

The ML555 board plugs into either a parallel PCI bus slot or a serial PCI Express slot in a system unit. PCI and PCI Express designs use different connector systems for add-in cards. System units provide unique DC voltages to the add-in cards through the connectors. PCI system units provide 3.3V and 5V, while PCI Express system units provide 3.3V and 12V to add-in cards. For PCI Express applications, the ML555 board converts the 12V supply to 5V before powering the onboard voltage regulators. For PCI applications, most of the onboard regulators are powered by 5V provided by the system units.

The GTP transceiver analog supplies and the FPGA V_{CCINT} voltage are sourced from either 3.3V from the PCI Express connector or a 5V to 3.0V DC converter on the ML555 board. Two configuration headers are provided on the ML555 board to select between the 5V and 3.3V power sources as indicated in Table 3-30 and Table 3-31. Figure 3-14 is a block diagram of the ML555 voltage regulator topology.

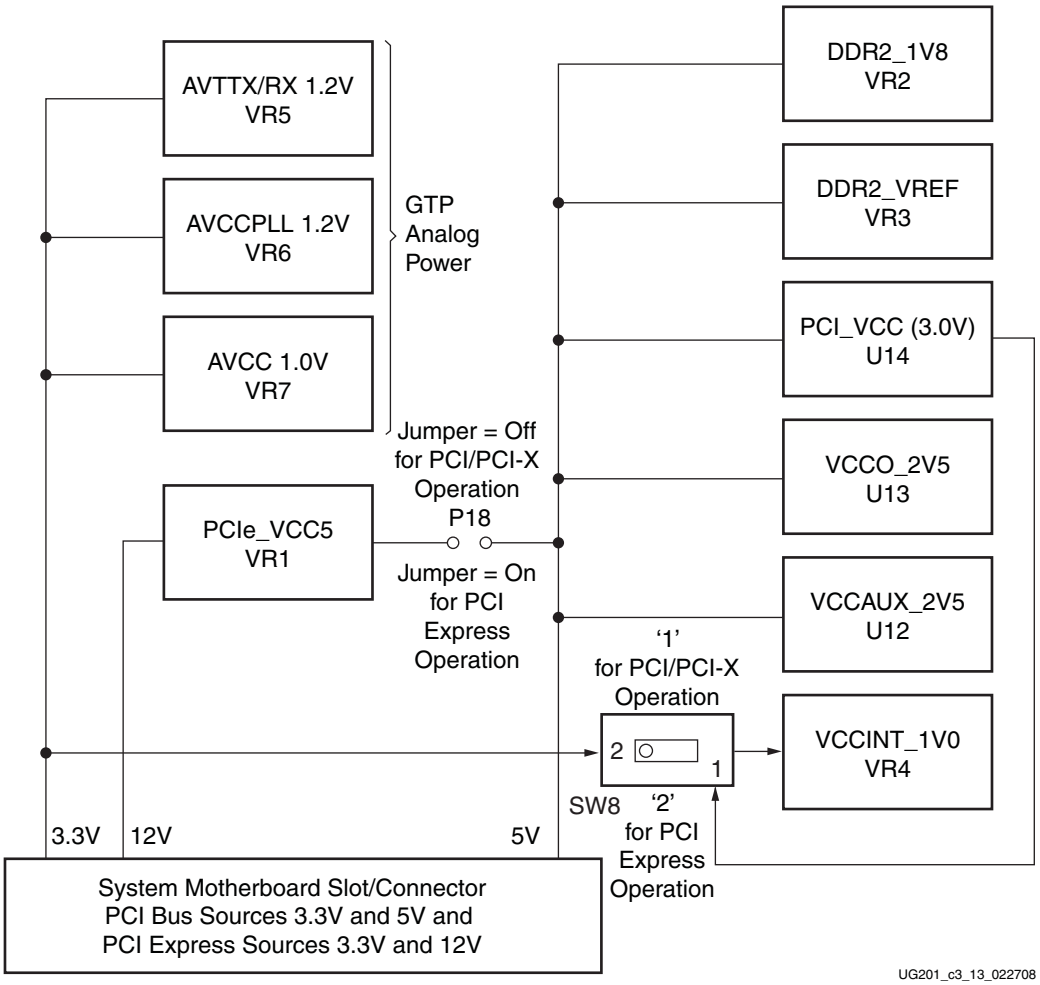

Figure 3-14: **Voltage Regulator Topology**

Caution! The end user *must* configure the ML555 board prior to installing the board in the system unit. Failure to configure the board jumpers prior to installation in the system unit might cause damage to the ML555 board.

Figure 3-15 shows the location of SW8 and P18 on the ML555 board. The switch and jumper *MUST* be configured prior to installing the board in the system unit. SW8 selects the FPGA V_{CCINT} source (PCI or PCI Express operation), and P18 is the 12V to 5V enable for PCI Express operation.

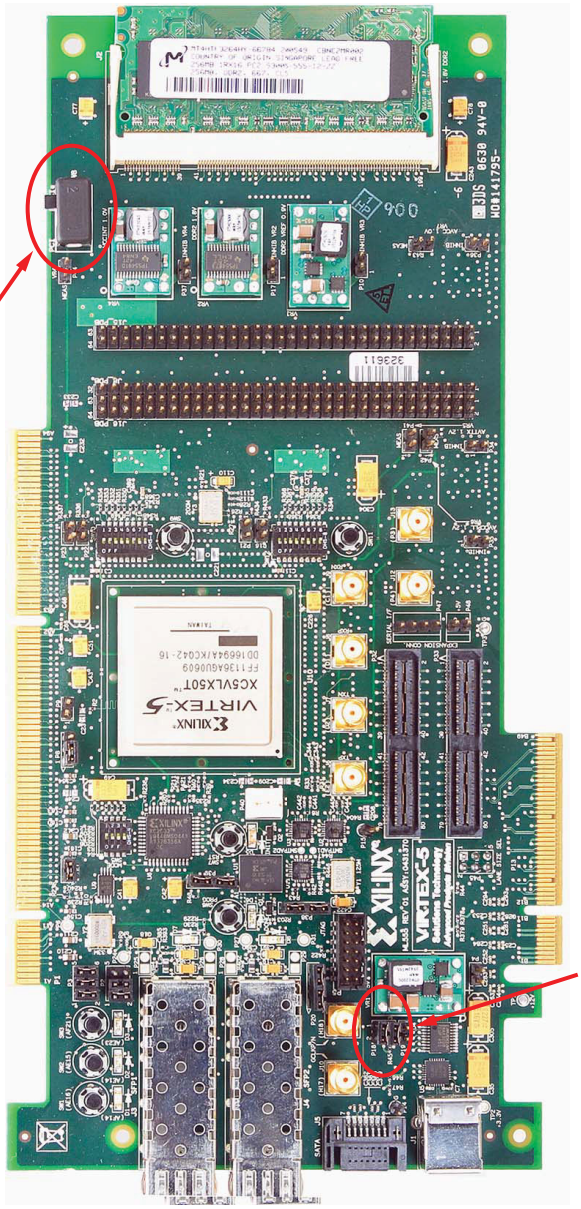

Figure 3-15: **Location of SW8 and P18**

Figure 3-16 shows the jumper settings on SW8 and P18 for Serial PCI Express and Parallel PCI-X Bus power configurations.

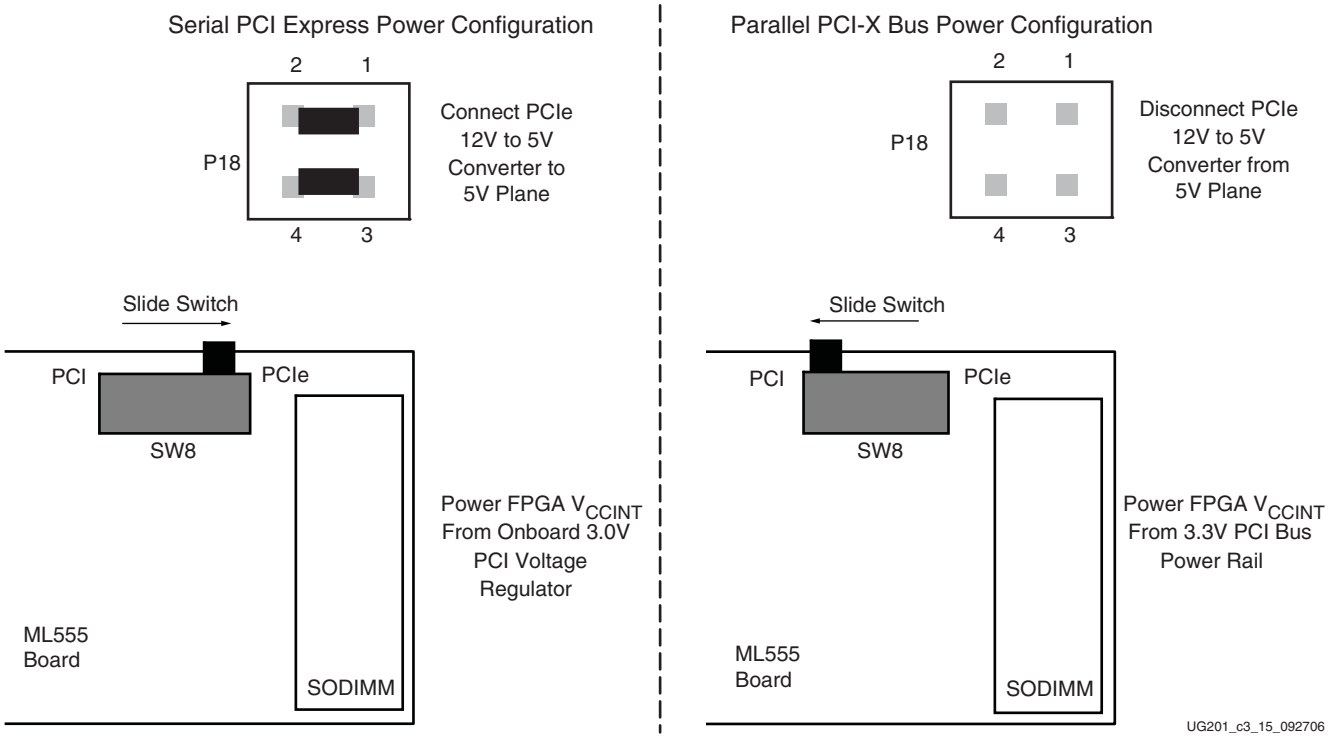

Figure 3-16: **ML555 Power Configuration**

Before installing the ML555 board in a system unit, the power system configuration header, P18, must be checked to ensure that the proper 5V input voltage is selected for the onboard regulators on the ML555 board according to Table 3-30.

Table 3-30: **ML555 5V Regulator Input Source Selection**

ML555 Bus Mode Application	Primary Voltage Regulator DC Input Voltage Source	SW8: 5V Source Selection Header for Onboard DC Regulators
PCI or PCI-X	+5V PCI Connector (System Unit Power)	Open circuit: • Remove shunts on connector P18 pins 1-2 • Remove shunts on connector P18 pins 3-4
PCI Express	+12V PCI Express Connector (System Unit Power) Onboard 12V to 5V DC converter powers most of the voltage regulators on the ML555 board.	Short circuit: • Connect shunts on connector P18 pins 1-2 • Connect shunts on connector P18 pins 3-4 Shunts are provided on the board.

The SW8 switch (the source of the 3V power) must be configured according to Table 3-31 to generate GTP transceiver analog and FPGA V_{CCINT} power.

Table 3-31: **V_{CCINT} Voltage Source Selection for PCI or PCI Express Bus Applications**

3.3V Power to GTP Analog Supplies and FPGA V_{CCINT} 1.0V Regulator Power Source	Voltage Source for FPGA V_{CCINT}	P11: 3V Selection Header Connections
PCI or PCI-X	ML555 on-board 3.0V regulator power	• Slide SW8 to the OFF position, connecting pins 2 and 3. Move switch towards silkscreen on board labeled *PCI*. See Figure 3-16 for graphic illustration.
PCI Express	PCI Express system board 3.3V power	• Slide SW8 to the ON position, connecting pins 1 and 2. Move switch towards silkscreen on board labeled *PCIe*. See Figure 3-16 for graphic illustration.

Caution! Failure to configure SW8 and P18 properly might result in damage to the ML555 onboard +12V to +5V regulator module.

PCI and/or PCI-X Application Add-in Card Power Input

For PCI or PCI-X applications, the host motherboard provides multiple power rails to the add-in card as shown in Table 3-32. The ML555 board does not use 3.3V AUX, -12V, or +12V from the system unit in the PCI mode. The PCI Card Electromechanical Specification places restrictions on the amount of power an add-in card is permitted to consume from the system unit power supply. An add-in card can consume a maximum of 25 Watts from all power rails combined. Current values specified in Table 3-32 are maximum supply currents provided by voltage. An add-in card cannot utilize all maximum capacities and stay under the 25W maximum specification.

Table 3-32: **PCI and PCI-X Add-in Card Power Rail Capacities**

PCI or PCI-X System Unit Power Rail	25W Slot Maximum
+3.3V	7.6A
+3.3V AUX	375 mA
+5V	5.0A
-12V	100 mA
+12V	500 mA

Notes:

1. All values are maximum current permitted per voltage supply. Cards must still stay within 25W maximum.

Add-in Card DC Power Input (PCI Express Operation)

For PCI Express applications, the ML555 board has +3.3V and +12V power available from the system unit power supply. The ML555 board does not use the 3.3V AUX power rail. The PCI Express Card Electromechanical Specification places restrictions on the amount of power an add-in card can draw from the system unit power supply. The PCI Express add-in card power consumption limits are shown in Table 3-33.

Single-lane PCI Express applications require the add-in card to power up in the 10W mode. After the host processor completes configuration, the slot can utilize the full 25W power allocation. The ML555 board can only plug into a x1 lane PCI Express connector using an adapter board to convert the eight-lane ML555 PCI Express interface to a single-lane form factor.

The ML555 board plugs into a x8 lane PCI Express slot in a server application with a 25W power restriction from the system unit. The add-in card slot can be wired for either x4 or x8 lanes, depending on the server. The 75W add-in card slot is primarily for 16-lane PCI Express applications. The ML555 board can plug into a 16-lane add-in card slot providing a maximum application link capability of 8 lanes.

Table 3-33: **Add-in Card Power Rail Capacities for PCI Express Operation**

Power Rail	10 Watt Slot	25 Watt Slot	75 Watt Slot
Standard Height PCI Express Card Lanes	x1	x1, x4, or x8 lanes (server applications)	x16 lanes (supported by the ML555 board)
+3.3V	3.0A (max)	3.0A (max)	3.0A (max)
+3.3V AUX	375 mA (max)	375 mA (max)	375 mA (max)
+12V	0.5A (max)	2.1A (max)	5.5A (max)

For PCI Express applications, the ML555 board uses the +12V power rail as the input power to a +12V to +5V DC-to-DC converter. The output of this DC-to-DC converter then provides the input voltage to most of the voltage regulators on the board. The GTP transceiver analog supplies and V_{CCINT} are supplied by the 3.3V input from the system board. For PCI and PCI-X applications, the ML555 board uses the +5V power rail as the input to all voltage regulators on the board.

The ML555 interface for PCI Express designs supports x1, x4, and x8 lane configurations. A 1 lane to 16 lane converter board for PCI Express designs is required to plug an ML555 board into the x1 slots for PCI Express operation. These interface connectors are available from Catalyst Enterprises.

ML555 Board DC Power Regulators

The ML555 board contains oncard voltage regulators that provide power for the Virtex-5 FPGA and onboard peripherals (see Table 3-34).

Table 3-34: **ML555 Onboard DC-to-DC Voltage Converters**

ML555 Board Reference Designator(1)	Input Voltage Source		Nominal Output Voltage	Maximum Output Current	DC Power Sink
	PCI or PCI-X Mode(2)	PCI Express Mode(3)			
VR1(4)	Not Used(2)	PCI Express Connector 12V Input	5V	6A	Provides 5V power to onboard voltage regulators in PCI Express mode only
VR2(5)	PCI Connector 5V Input	VR1 5V Output	1.8V	6A	DDR2 memory, other 1.8V ML555 peripherals, and FPGA 1.8V V_{CCO} reference voltage
VR3(5)	PCI Connector 5V Input	VR1 5V Output	0.9V	6A	DDR2 memory interface termination and FPGA 0.9V reference voltage
U12(5)	PCI Connector 5V Input	VR1 5V Output	2.5V	5A	FPGA V_{CCAUX} supply
U13(5)	PCI Connector 5V Input	VR1 5V Output	2.5V	5A	FPGA V_{CCO}, XGI header and other ML555 2.5V peripherals
U14(5)	PCI Connector 5V Input	VR1 5V Output	3.0V	5A	PCI FPGA 3.0V V_{CCO} reference voltage
VR4(4,5)	PCI Connector 3.3V Input	U14 3.0V Output	1.0V	6A	FPGA V_{CCINT} voltage
VR5(4,5)	PCI Connector 3.3V Input	PCI Express Connector 3.3V Input	1.2V AVTTTX and AVTRX	4A	GTP 1.2V analog voltage for transmitter and receiver termination voltages
VR6(4,5)	PCI Connector 3.3V Input	PCI Express Connector 3.3V Input	1.2V AVCCPLL	4A	GTP 1.2V analog voltage for PLL circuitry
VR7(4,5)	PCI Connector 3.3V Input	PCI Express Connector 3.3V Input	1.0V AVCC	4A	GTP 1.0V analog voltage

Notes:

1. Refer to Figure 3-14, page 76 for a block diagram of the ML555 DC power system. Additional design information is available on the ML555 board schematics.
2. For PCI and PCI-X design applications, position switch SW8 (Figure 3-16, page 78) to power the GTP transceiver analog supplies and FPGA V_{CCINT} from the 3.3V input voltage of the PCI connector. Remove shunts on header P18 before applying power to the ML555 board.
3. For PCI Express design applications, position switch SW8 (Figure 3-16, page 78) to power FPGA V_{CCINT} from the 3.0V regulator U14 output. GTP transceiver analog supplies are powered from the 3.3V input voltage of the PCI Express connector. Install two shunts on connector P18 (P18-1 to P18-2 and P18-3 to P18-4) to connect VR1 5V output to power the onboard regulators.
4. These voltage regulator output ports are connected in series through a 10 mΩ Kelvin resistor to the load on the ML555 board. VR1 has a 150 mΩ series Kelvin resistor. Refer to "Power Supply Monitoring," page 82 for additional information.
5. FPGA power supplies can be turned on in any sequence. The Virtex-5 FPGA data sheet provides a table for "Power-On Current for Virtex-5 Devices" for a specified voltage power-on sequence (V_{CCINT} - V_{CCAUX} - V_{CCO}). The ML555 board does not have, nor does it need to have, voltage sequencing circuitry for the DC-to-DC voltage converters on the board.

GTP Transceiver Power

Three low drop-out (LDO) voltage regulators are provided for the analog voltage inputs to the GTP transceivers. Each regulator has a voltage divider circuit that permits the voltage to be adjusted, if required, simply by changing resistance value of the voltage divider. Each regulator can source up to 4A of current. A single voltage regulator sources power to the AVTTX, AVTRX, and VVTTRXC inputs of the GTP transceivers. The ML555 board does not provide separate power supplies for the transmitter and receiver termination voltages.

The GTP transceiver analog power supplies are filtered in accordance with the *Virtex-5 FPGA RocketIO GTP Transceiver User Guide*. Eight of the 12 GTPs on the ML555 board are specifically targeted solely for PCI Express applications.

DDR2 SODIMM Power

Power consumption for the DDR2 memory interface is dependent upon the density and speed of the memory installed in the SODIMM socket. Table 3-35 shows approximate 1.8V current consumption requirements by density and transfer rate for Micron Semiconductor SODIMMs supported by the ML555 board. Memory data sheet specifications should be consulted to determine specific power requirements for the SODIMM devices.

Higher densities and higher performance SODIMMs are supported, however, the user must calculate total application power and stay within the PCI and or PCI Express add-in card specifications.

Table 3-35: **DDR2 SODIMM Current Consumption versus Data Transfer Rate**

Memory Density	400 MT/s	533 MT/s	667 MT/s
128 MB	480 mA	720 mA	860 mA
256 MB	620 mA	780 mA	940 mA
512 MB	720 mA	780 mA	1100 mA

Current consumption can be even higher than shown in Table 3-35 if the four memory banks are interleaved in the DDR2 memory. Interleaving is accomplished by using the BA[2:0] bank address as the least-significant column address bits to the DDR2 memory. While interleaving does not increase memory performance, it increases power dissipation and should be avoided for PCI Express and PCI bus applications where add-in card power is limited by specification to 25W.

Power Supply Monitoring

The ML555 board provides capabilities to monitor and measure the voltage and current for the FPGA internal voltage and all analog GTP voltage regulators. Figure 3-17 shows a block diagram of the voltage sensing circuit. Only those supplies central to PCI Express power functions are provided with power supply monitoring capabilities. A 10 mΩKelvin resistor is placed in series between the regulated output and the load on the board. The input and output port of the series resistor is routed to a header that can be connected to a Volt-Ohm-Meter (VOM) to measure the voltage drop across the resistor. The current then can be calculated dividing the voltage by 0.010Ω. Power equals voltage times current.

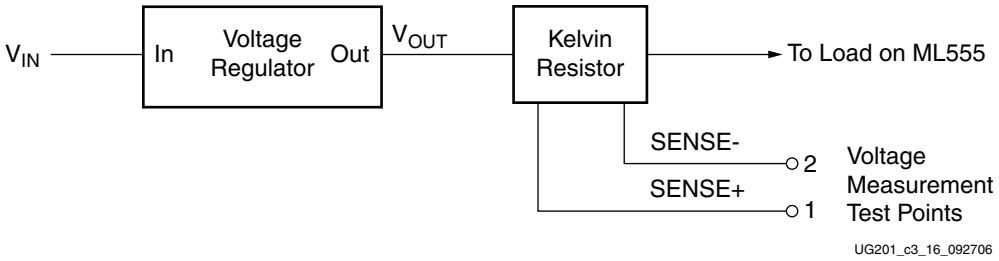

Figure 3-17: **Voltage Measurement Test Points**

The ML555 board provides headers that can be used to monitor the three GTP transceiver analog power supplies as well as the internal FPGA voltage V_{CCINT}. For PCI Express applications, power sensing is provided on the output of the +12V to +5V power regulator, so a total 5V power consumption for the PCI Express application can be determined. The Kelvin resistor for the 5V power sense point uses a 150 mΩ resistor value instead of the 10 mΩ resistor used in other sense circuits. Current is calculated by dividing the sense voltage by 0.150Ω.

Figure 3-18 shows the power measurement headers, and Table 3-36 defines their functions.

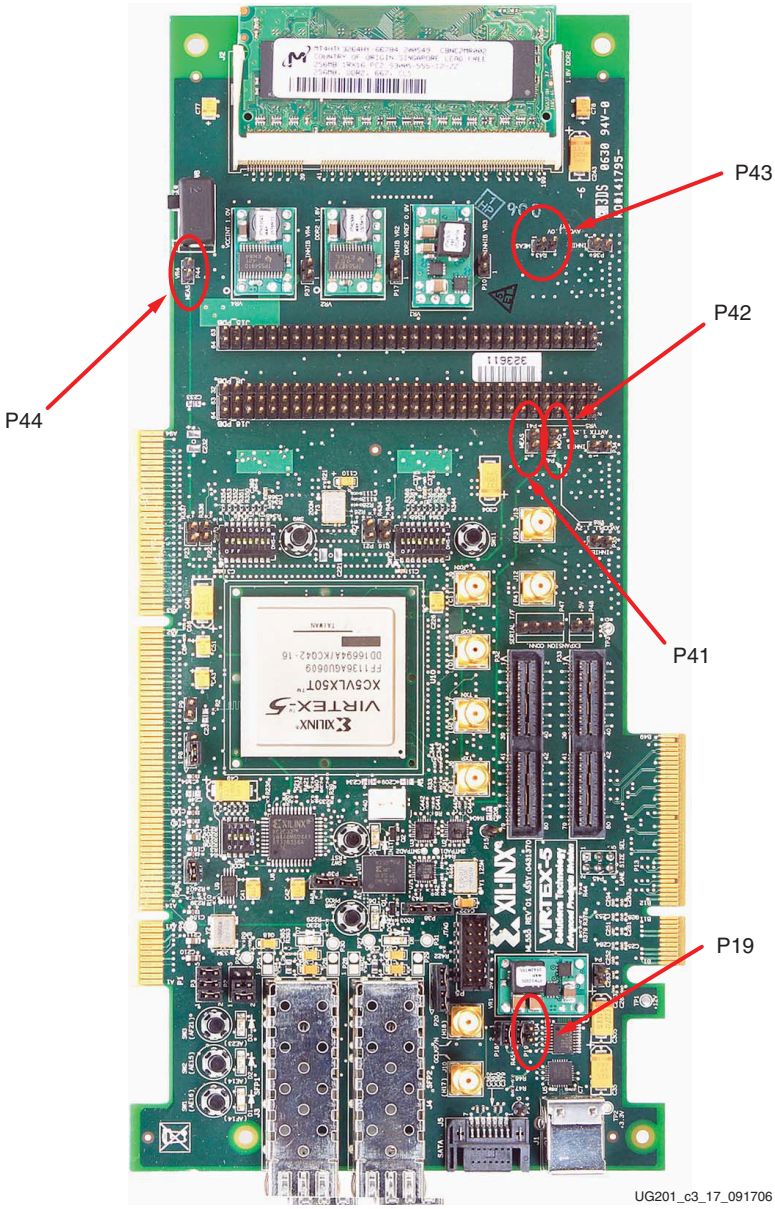

Figure 3-18: **Power Measurement Headers**

Table 3-36: **ML555 Voltage Sensing Power Measurement Headers**

Voltage Name	Description	Header Pin (SENSE+)	Header Pin (SENSE-)	Series Resistance
AVTTX	1.2V GTP Analog Termination Voltage	P41-1	P41-2	10 mΩ
AVCCPLL	1.2V GTP Analog PLL Supply Voltage	P42-1	P42-2	10 mΩ
AVCC	1.0V GTP Analog Supply Voltage	P43-1	P43-2	10 mΩ
V_{CCINT}	1.0V FPGA Internal Voltage	P44-1	P44-2	10 mΩ
12V-to-5V Converter for PCI Express Applications	5V Power Consumption in PCI Express Applications. Includes all 5V power loads.	P19-1	P19-2	150 mΩ

The ML555 board *cannot* margin any of the oncard power supplies. Other Xilinx boards have power supply monitoring and margining capabilities for application-specific functions, such as memory interfaces and LVDS interfaces. Characterization boards are available for GTP transceiver characterization.

ML555 Board Physical Dimensions

The physical height of the ML555 board prevents the system unit covers from being used. The ML555 board should only be used in a development environment. The ML555 board is 4.7 inches high by 10.5 inches long.

XC2C32 CoolRunner-II CPLD U6

This CPLD supports static or dynamic reconfiguration of the FPGA design image. A default design image for the CPLD is provided with the ML555 board to support static reconfiguration. To select one of four designs, the user configures the P3 configuration image select header and then either powers up the board, or depresses and releases the PROG switch while the board is in a system unit. The design image might require the board to be plugged into either a parallel PCI bus system board slot or a serial PCI Express system board slot.

Figure 4-5, page 92 and Table 4-4, page 94 summarize the CPLD connections to:

- U1 and U15: XCF32PFSG48C Platform Flash configuration devices
- U10: XC5VLX50T FPGA Bank 20
- U10: XC5VLX50T FPGA Bank 0 Configuration Interface
- P3: Configuration Image select header
- SW6 (PROG), SW7: General-purpose pushbutton switches

All XC2C32 I/O are 2.5V, and the XC2C32 V_{CCINT} is 1.8V. Chapter 4, "Configuration," includes more details concerning the ML555 board configuration.

XCF32PFS48C Platform Flash U1 and U15

Figure 4-5, page 92 and Table 4-5, page 95 summarize the Platform Flash connections to the XC5VLX50T FPGA U10 and the XC2C32 CPLD U6.

The XCF32PFS48C V_{CCO} is 2.5V.

The Platform Flash holds up to four configuration images for the XC5VLX50T FPGA, two images in each device. As shown in Figure 4-5, the configuration image is selected by applying shorting blocks to header P3. When generating design images for the ML555 board, the BITGEN "compress" option is not required to store four design images in the Platform Flash device. Table 3-37 shows how to select each one of the four configuration image files depending upon how shunts are installed on header P3.

Table 3-37: **Platform Flash Image Selection**

MAN_AUTO (P3-5 to P3-6)	FLASH_IMAGE1_SEL (P3-3 to P3-4)	FLASH_IMAGE0_SEL (P3-1 to P3-2)	FPGA Configuration Image Selected(1)
SHUNT ON	SHUNT ON	SHUNT ON	Configure FPGA with Platform Flash U1 Image 0 (4-lane Virtex-5 LogiCORE Endpoint block for PCI Express memory completer design)
SHUNT ON	SHUNT ON	SHUNT OFF	Configure FPGA with Platform Flash U1 Image 1 (8-lane Virtex-5 FPGA LogiCORE Endpoint block for PCI Express memory completer design)
SHUNT ON	SHUNT OFF	SHUNT ON	Configure FPGA with Platform Flash U15 Image 0 (32-bit, 33 MHz memory reference design for PCI operation)
SHUNT ON	SHUNT OFF	SHUNT OFF	Configure FPGA with Platform Flash U15 Image 1 (64-bit, 133 MHz memory reference design for PCI-X operation)

Notes:

1. See XAPP1022 [Ref 5]. This application note demonstrates how to generate an Endpoint Block Plus PIO example design and test the design function in a PC using a memory endpoint test driver.

In concert with the XC2C32 CPLD, the XCF32PFS48C supports static and dynamic reconfiguration of the FPGA. Chapter 4, "Configuration," provides more details concerning the ML555 board configuration.

Chapter 4

Configuration

The Virtex-5 FPGA ML555 board includes several options to configure the XC5VLX50T FPGA, XC2C32 CoolRunner-II CPLD, and the XCF32PF Platform Flash. The basic configuration modes for the Virtex-5 family are:

- JTAG mode via Parallel Cable IV, Platform Cable USB, or equivalent
- Master SelectMAP mode via CPLD and Platform Flash
- Slave SelectMAP mode via CPLD and Platform Flash
- Slave Serial mode via CPLD and Platform Flash
- Master Serial mode via CPLD and Platform Flash

The CPLD and Platform Flash can only be configured via JTAG. The Platform Flash contains up to four unique bitstreams for programming the FPGA. The unique combination of the FPGA connected to the Platform Flash through the CPLD allows for static and dynamic bitstream selection of the FPGA via Slave and Master SelectMAP modes.

This chapter provides a description of the FPGA configuration circuitry and methods used on the Virtex-5 FPGA ML555 board. The JTAG chain permits the CPLD and/or the Platform Flash devices to be bypassed with onboard headers. Figure 4-1 shows the location of configuration switches, connectors, and devices discussed in this chapter.

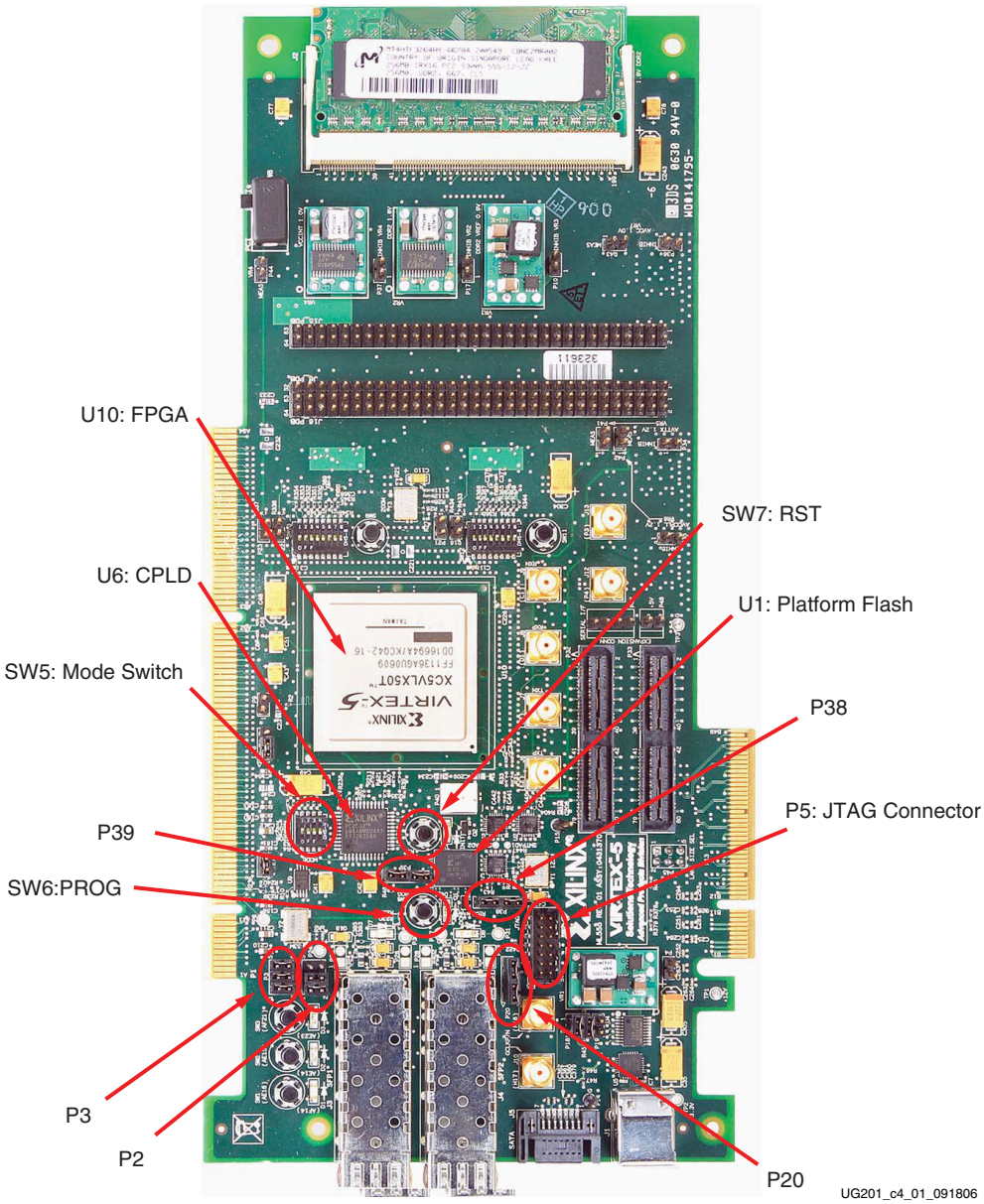

Figure 4-1: **Configurable Devices**

Configuration Modes

Table 4-1 shows the Virtex-5 FPGA configuration modes along with the correct settings for the Configuration Mode switch (SW5).

Table 4-1: **Configuration Modes**

Mode(1)	JTAG P5	Mode SW5(2)		
		1 (M0)	2 (M1)	3 (M2)
Master SelectMAP(3)	N/A	0	0	1
Slave SelectMAP(3)	N/A	0	1	1
JTAG	Yes	1	0	1
Master Serial	N/A	0	0	0
Slave Serial	N/A	1	1	1

Notes:

1. Switch position 4 is used to select the DC voltage level applied to the HSWAPEN FPGA configuration input. This switch controls whether the weak pull-up resistors on the FPGA I/Os are enabled or disabled prior to configuration.
2. 0 = switch position is Closed or in the ON position. 1 = switch position is Open or in the OFF position. See Figure 4-2.
3. When using SelectMAP configuration mode, see Table 4-7 for configuration of the CCLK source for master mode operation. Slave SelectMAP clocking is not supported on the ML555 board. Master SelectMAP, with a minimum 20 MHz configuration clock (CCLK) frequency, is the recommended configuration method for PCI, PCI-X, and PCI Express applications utilizing the ML555 board.

Figure 4-2 shows the Configuration Mode switch. SW5 position 4 is used to select the DC voltage level applied to the HSWAPEN input pin in the FPGA configuration bank. If the switch is in the OFF position, the weak preconfiguration I/O pull-up resistors are disabled. If the switch is in the ON position, the weak preconfiguration I/O pull-up resistors are enabled.

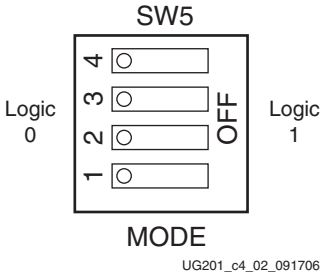

Figure 4-2: **Configuration Mode Switch**

JTAG Chain

Figure 4-3 shows the JTAG chain on the ML555 board. The chain can be driven by the following sources:

- Xilinx Parallel Cable IV or Platform Cable USB
- Other JTAG cables

The JTAG chain supports bypassing of the CPLD or the Platform Flash devices. The FPGA cannot be bypassed. Board connector/header P39 is used to enable or bypass the CPLD,

connector/header P38 is used to enable or bypass the Platform Flash device U1, and connector/header P20 is used to enable or bypass the second Platform Flash device U15.

To enable the CPLD for JTAG configuration, the shunts on P39 are connected from pin 1 to pin 2, and a second shunt connects pin 3 to pin 4. To bypass the CPLD, a single shunt is installed on P39, connected from pin 2 to pin 3.

To enable the Platform Flash devices for JTAG configuration, two shunts are installed on connectors P38/P20, connecting from pin 1 to pin 2 for the first shunt, and connecting pin 3 and 4 for the second shunt. To bypass the Platform Flash devices, a single shunt on P38/P20 is connected from pin 2 to pin 3. The default board configuration enables all four devices in the JTAG scan chain.

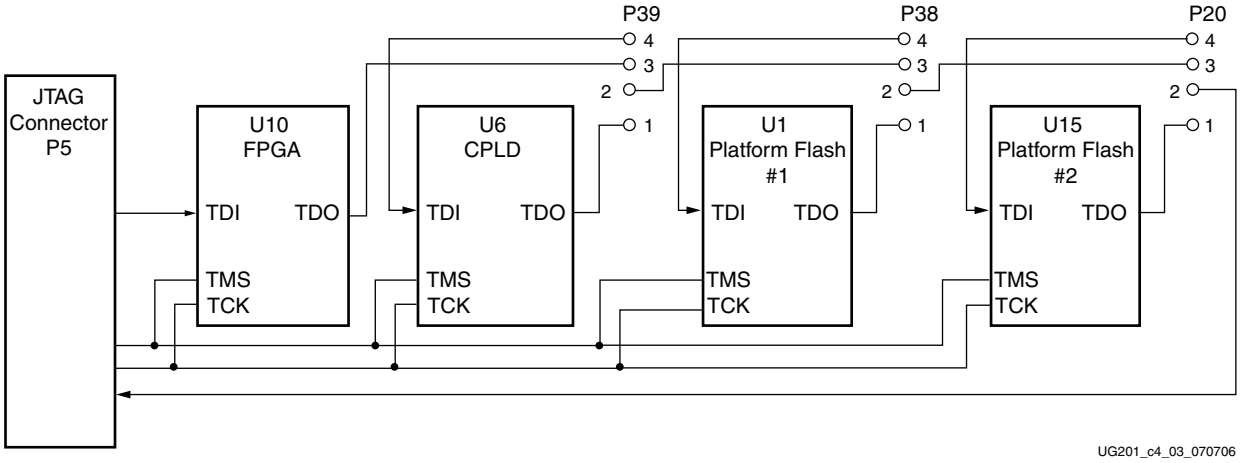

Figure 4-3: **JTAG Chain**

JTAG Port

The ML555 board provides a JTAG connector (P5) to configure the FPGA and program JTAG devices located in the JTAG chain. Figure 4-4 shows the pin assignments for the JTAG connector. The JTAG cable connects to P5, and the connector on the ML555 board has a keyed, plastic shroud to ensure that the device programming cable connects properly.

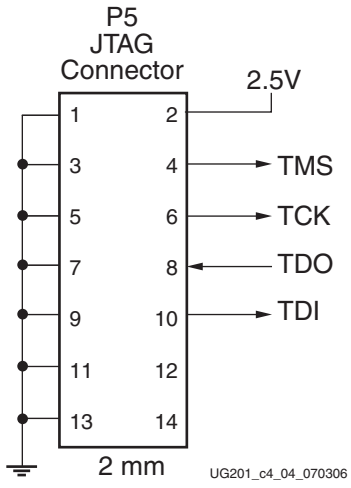

Figure 4-4: **JTAG Cable Hook-up**

Table 4-2: **P5 JTAG Header Signal Descriptions and Pin Assignments**

Signal Name	Description	P5 Pin Number	FPGA Pin Number	CPLD Pin Number	Flash Pin Number
JTAG_TMS	JTAG TMS to FPGA/CPLD/Flash	4	AC14	10	E2
JTAG_TCK	JTAG TCK to FPGA/CPLD/Flash	6	AB15	11	H3
JTAG_TDO	JTAG TDO from Flash	8	N/A	N/A	E6(2)
JTAG_TDI	JTAG TDI to FPGA TDI	10	AC15	N/A	N/A

Notes:

1. This JTAG connectivity assumes that all four devices are in the JTAG configuration chain.
2. The JTAG_TDO connection is made to the second Platform Flash device, U15. The JTAG_TMS and JTAG_TCK signals are connected to both U1 and U15 Platform Flash devices.

SelectMAP Interface

The SelectMAP interface is connected to the Platform Flash devices indirectly through the CPLD. For the SelectMAP interface to operate correctly, the CPLD needs to be programmed (via JTAG) such that the correct connections are made between the FPGA and the Flash. The CPLD on the ML555 board has a default image programmed into the device to permit selection of up to four static design images in the two Platform Flash configuration devices. The source HDL code and CPLD constraint file are located on the CD-ROM provided with the ML555 kit.

Figure 4-5 is a general schematic for the Flash/CPLD/FPGA SelectMAP Interface. Table 4-3 through Table 4-5 list the pinouts for the FPGA, CPLD, and Platform Flash, respectively. The two Platform Flash devices are connected in parallel, with the exception of the chip-enable inputs. The CPLD has one chip-enable output for each Platform Flash device.

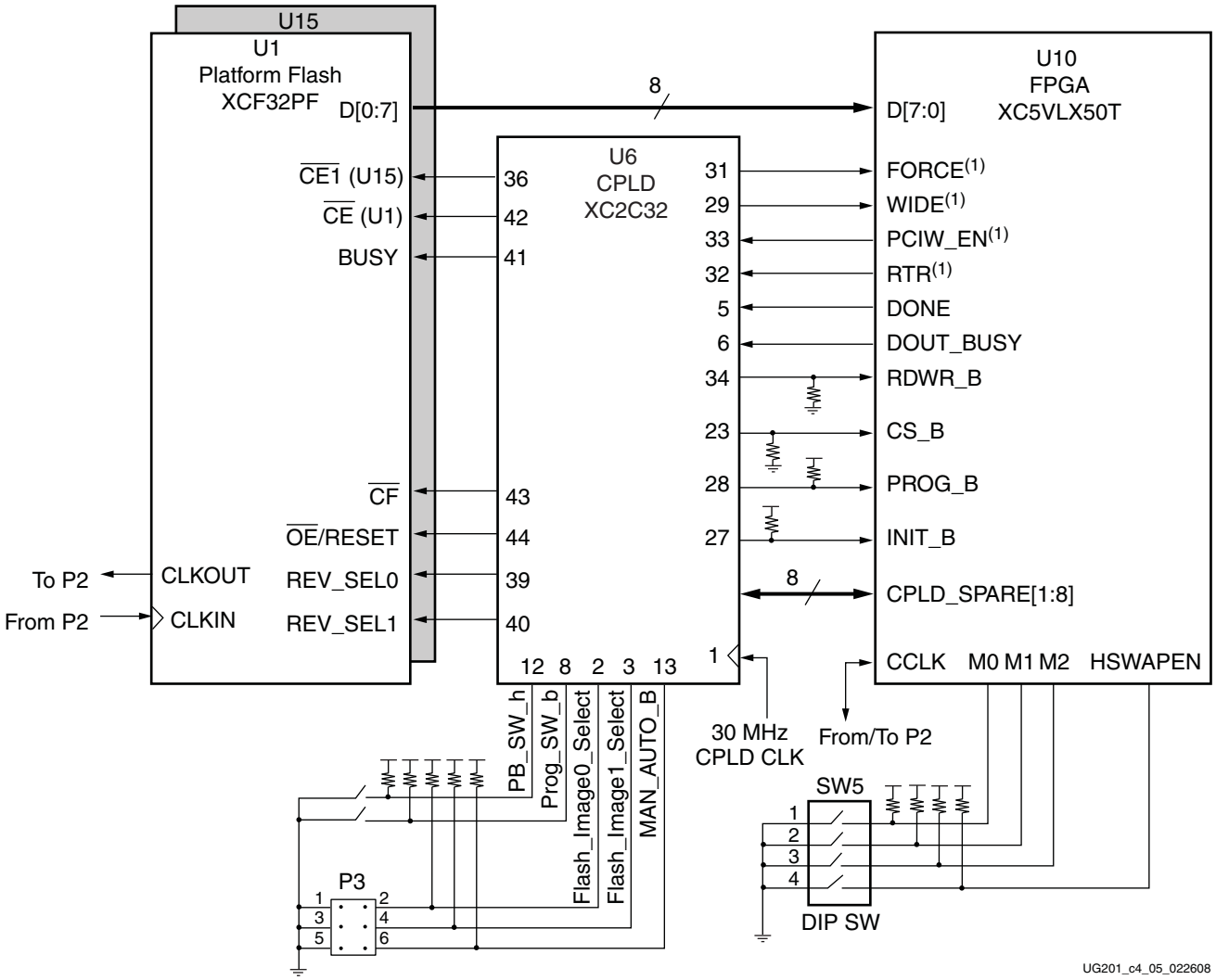

Notes:

1. FORCE, WIDE, PCIW_EN, and RTR are FPGA general-purpose I/Os.

Figure 4-5: **Schematic of Flash/CPLD/FPGA SelectMAP Interface**

Table 4-3: **FPGA Configuration Pin Listing(1)**

Pin Number	Net Name	Direction	Pin Type	Description
N15	FPGA_CCLK	I/O	CCLK	Configuration Clock Input or Output
N23	FPGA_RDWR_B	I	RDWR_B	Active-Low Read Write
N22	FPGA_CS_B	I	CS_B	Active-Low Chip Select
AD21	MODE0	I	M0	Mode Select 0
AC22	MODE1	I	M1	Mode Select 1
AD22	MODE2	I	M2	Mode Select 2
M22	PROG_B	I	PROGRAM_B	Active-Low asynchronous full-chip reset
N14	INIT_B	I	INIT_B	Active-Low Delay Configuration

Table 4-3: **FPGA Configuration Pin Listing[1] *(Continued)***

Pin Number	Net Name	Direction	Pin Type	Description
M15	FPGA_DONE	O	DONE	Active-High signal indicating configuration is complete
AD15	FPGA_BUSY_B	O	DOUT_BUSY	Active-Low Busy signal
AD19, P15	FLASH_D0[5]	I	IO	SelectMAP data bit 0 connected to Platform Flash device
AE19	FLASH_D1[5]	I	IO	SelectMAP data bit 1 connected to Platform Flash device
AE17	FLASH_D2[5]	I	IO	SelectMAP data bit 2 connected to Platform Flash device
AF16	FLASH_D3[5]	I	IO	SelectMAP data bit 3 connected to Platform Flash device
AD20	FLASH_D4[5]	I	IO	SelectMAP data bit 4 connected to Platform Flash device
AE21	FLASH_D5[5]	I	IO	SelectMAP data bit 5 connected to Platform Flash device
AE16	FLASH_D6[5]	I	IO	SelectMAP data bit 6 connected to Platform Flash device
AF15	FLASH_D7[5]	I	IO	SelectMAP data bit 7 connected to Platform Flash device
L11	FORCE[2,3,4]	I	IO	Input connected from Pin 31 of Platform Flash device
L10	WIDE[2,3,4]	I	IO	Input connected from Pin 29 of CPLD
C13	PCIW_EN[2,3,4]	O	IO	Output connected to Pin 33 of CPLD
B13	RTR[2,3,4]	O	IO	Output connected to Pin 32 of CPLD
B12	CPLD_SPARE1[2,4]	I/O	IO	Spare I/O connected to CPLD pin 21
A13	CPLD_SPARE2[2,4]	I/O	IO	Spare I/O connected to CPLD pin 22
H9	CPLD_SPARE3[2,4]	I/O	IO	Spare I/O connected to CPLD pin 36

Notes:

1. Configuration signals are connected to FPGA bank 0. The reference voltage, V_{CCO}, for this bank is 2.5V. See the ML555 board schematics on the CD-ROM for additional information.
2. These signals are connected to FPGA bank 20. The FPGA reference voltage, V_{CCO}, for this bank is 2.5V. See the ML555 board schematics on the CD-ROM for additional information.
3. The Net Names and Directions for pins L11, L10, C13, and B13 were chosen to support a specific PCI/PCI-X design as described in "CPLD Programming Examples." The user can use these pins as spare, bidirectional pins.
4. Use LVCMOS_25 I/O standard for general-purpose I/O connected to the CPLD.
5. The Platform Flash data bus is connected to FPGA Bank 2. The FPGA reference voltage, V_{CCO}, for this bank is 2.5V. Platform Flash data bit 0 is also connected to FPGA bank 0 to support the Serial SelectMAP configuration.

Table 4-4: **CPLD Pin Listing**

Pin Number	Net Name	Direction	Pin Type	Description
1	CPLD_CLK_30MHZ	I	IO/GC1	30 MHz Global Clock Input
2	FLASH_IMAGE0_SELECT	I	IO1	Revision Select Pin 0 from Header P3
3	FLASH_IMAGE1_SELECT	I	IO2	Revision Select Pin 1 from Header P3
4	GND	I	GND1	Ground
5	FPGA_DONE	I	IO3	DONE pin from FPGA
6	FPGA_BUSY_B	I	IO4	DOUT Busy pin from FPGA
7	VCC2V5	I	VCCIO1	2.5V I/O Power
8	PROG_SW_B	I	IO5	Input from Pushbutton SW6
9	FPGA_TDO	I	TDI	JTAG TDI from FPGA
10	JTAG_TMS	I	TMS	JTAG TMS
11	JTAG_TCK	I	TCK	JTAG TCK
12	ICS_FSEL2	I	IO6	CPLD output to ICS874003-02 FSEL2 input
13	MAN_AUTO_B	I	IO7	Manual/Auto Select pin from Header P3
14	ICS_MR	I/O	IO8	CPLD output to ICS874003-02 master reset input
15	VCC1V8	I	VCC	1.8V Power
16	ICS_OEA	I/O	IO9	CPLD output to ICS874003-02 output enable port A input
17	GND	I	GND2	Ground
18	PB_SW_B	I	I	CPLD input from Pushbutton SW7. Pin 18 is CPLD input only.
19	ICS_FSEL1	I/O	IO10	CPLD output to ICS874003-02 FSEL1 input
20	ICS_FSEL0	I/O	IO11	CPLD output to ICS874003-02 FSEL0 input
21	CPLD_SPARE1	I/O	IO12	Spare I/O connected to FPGA pin B12
22	CPLD_SPARE2	I/O	IO13	Spare I/O connected to FPGA pin A13
23	FPGA_CS_B	I	IO14	Chip Select from FPGA
24	CPLD_TDO	O	TDO	JTAG TDO to Flash
25	GND	I	GND3	Ground
26	VCC2V5	I	VCCIO2	2.5V I/O Power
27	INIT_B	O	IO15	Output connected to INIT_B pin of FPGA
28	PROG_B	O	IO16	Output connected to PROG_B pin of FPGA
29	WIDE(1)	O	IO17	Output connected to Pin F12 of FPGA
30	EDGE_RST_I_B(1)	I	IO/GS-R	Input connected from Pin A15 of Edge PCI
31	FORCE(1)	O	IO/GOE1	Output connected to Pin F13 of FPGA

Table 4-4: **CPLD Pin Listing *(Continued)***

Pin Number	Net Name	Direction	Pin Type	Description
32	RTR(1)	I	IO/GOE2	Input connected from Pin F16 of FPGA
33	PCIW_EN(1)	I	IO/GOE3	Input connected from Pin F11 of FPGA
34	FPGA_RDWR_B	O	IO/GOE4	Output connected to RDWR_B pin of FPGA
35	VCC2V5	I	VAUX	2.5V auxiliary power
36	CPLD_SPARE3	I/O	IO18	Spare I/O connected to FPGA pin H9
37	PCIE_RST	I	IO19	Active-Low RESET input for PCI Express from P13-A11
38	FLASH_CE1_B	O	IO20	Output connected to the $\overline{CE}$ pin of Platform Flash U15
39	FLASH_REV_SEL0	O	IO21	Output connected to the REV_SEL0 pin of Platform Flash devices
40	FLASH_REV_SEL1	O	IO22	Output connected to the REV_SEL1 pin of Platform Flash devices
41	BUSY_TO_FLASH_B	O	IO23	Output connected to the BUSY pin of Platform Flash devices
42	FLASH_CE_B	O	IO24	Output connected to the $\overline{CE}$ pin of Platform Flash U1
43	FLASH_CF_B	O	IO/GC2	Output connected to the $\overline{CF}$ pin of Platform Flash devices
44	FLASH_OE_RESET_B	O	IO/GC3	Output connected to the $\overline{OE}$/RESET pin of Platform Flash devices

Notes:

1. The Net Names and Directions for pins 29 through 33 were chosen to support a specific PCI/PCI-X design as described in "CPLD Programming Examples." The user can use these pins as spare, bidirectional pins.
2. All CPLD I/O are 2.5V LVCMOS.

Table 4-5: **Pin Listing for Platform Flash**

Pin Number	Net Name	Direction	Pin Type	Description
C1	BUSY_TO_FLASH_B	I	BUSY	Active-Low Busy signal connected from CPLD Pin 41
G1	CPLD_TDO	I	TDI	JTAG TDI connected from CPLD JTAG TDO
B4	FLASH_CE_B (U1) or FLASH_CE1_B (U15)	I	$\overline{CE}$	Active-Low Chip Enable connected from CPLD Pin 42 (U1) or CPLD Pin 38 (U15)
D1	FLASH_CF_B	I	$\overline{CF}$	Active-Low Configuration Pulse input connected to CPLD Pin 43
B3	FLASH_CLKIN	I	CLK	Clock Input connected from Pin 1 of Header P2
C2	FLASH_CLKOUT	O	CLKOUT	Clock Output connected to Pin 5 of Header P2
H6	FLASH_D0	O	D0	SelectMAP data bit 0 connected to FPGA

Table 4-5: **Pin Listing for Platform Flash *(Continued)***

Pin Number	Net Name	Direction	Pin Type	Description
H5	FLASH_D1	O	D1	SelectMAP data bit 1 connected to FPGA
E5	FLASH_D2	O	D2	SelectMAP data bit 2 connected to FPGA
D5	FLASH_D3	O	D3	SelectMAP data bit 3 connected to FPGA
C5	FLASH_D4	O	D4	SelectMAP data bit 4 connected to FPGA
B5	FLASH_D5	O	D5	SelectMAP data bit 5 connected to FPGA
A5	FLASH_D6	O	D6	SelectMAP data bit 6 connected to FPGA
A6	FLASH_D7	O	D7	SelectMAP data bit 7 connected to FPGA
H4	FLASH_EN_EXT_SEL_B	I	$\overline{\text{EN_EXT_SEL}}$	Enable External Selection input – tied Low
A3	FLASH_OE_RESET_B	I/O	$\overline{\text{OE}}$/RESET	Output Enable / Active-Low Reset
G3	FLASH_REV_SEL0	I	REV_SEL0	Revision Select 0 input connected to CPLD Pin 39
G4	FLASH_REV_SEL1	I	REV_SEL1	Revision Select 1 input connected to CPLD Pin 40
H3	JTAG_TCK	I	TCK	JTAG TCK
E6	JTAG_TDO	O	TDO	JTAG TDO connected to Header P5
E2	JTAG_TMS	I	TMS	JTAG TMS
A1	GND	I	GND1	Ground
A2	GND	I	GND2	Ground
B6	GND	I	GND3	Ground
F1	GND	I	GND4	Ground
F5	GND	I	GND5	Ground
F6	GND	I	GND6	Ground
H1	GND	I	GND7	Ground
B1	VCC1V8	I	VCCINT1	1.8V Power
E1	VCC1V8	I	VCCINT2	1.8V Power
G6	VCC1V8	I	VCCINT3	1.8V Power
H2	VCC1V8	I	VCCJ(1)	1.8V Power
D6	VCC2V5	I	VCCO3	2.5V I/O Power
B2	VCC2V5	I	VCCO1	2.5V I/O Power
C6	VCC2V5	I	VCCO2	2.5V I/O Power
G5	VCC2V5	I	VCCO4	2.5V I/O Power
A4	Unused	I	DNC1	Do Not Connect
C3	Unused	I	DNC2	Do Not Connect
C4	Unused	I	DNC3	Do Not Connect

Table 4-5: **Pin Listing for Platform Flash *(Continued)***

Pin Number	Net Name	Direction	Pin Type	Description
D2	Unused	O	$\overline{CEO}$	Do Not Connect
D3	Unused	I	DNC4	Do Not Connect
D4	Unused	I	DNC5	Do Not Connect
E3	Unused	I	DNC6	Do Not Connect
E4	Unused	I	DNC7	Do Not Connect
F2	Unused	I	DNC8	Do Not Connect
F3	Unused	I	DNC9	Do Not Connect
F4	Unused	I	DNC10	Do Not Connect
G2	Unused	I	DNC11	Do Not Connect

Notes:

1. The ML555 board uses 2.5V I/O drivers for the JTAG chain. The Platform Flash V_{CCJ} connection should match JTAG I/O voltages of devices in the chain.

CPLD Programming Examples

Static Configuration

Figure 4-6 shows one possibility of connecting the FPGA to the Flash. This example allows the FPGA to be statically selected and programmed with up to four bitstreams located in the Flash. The selection of the bitstream is based on the configuration of the Flash Image Select header P3. Table 4-6 shows the jumper settings for header P3.

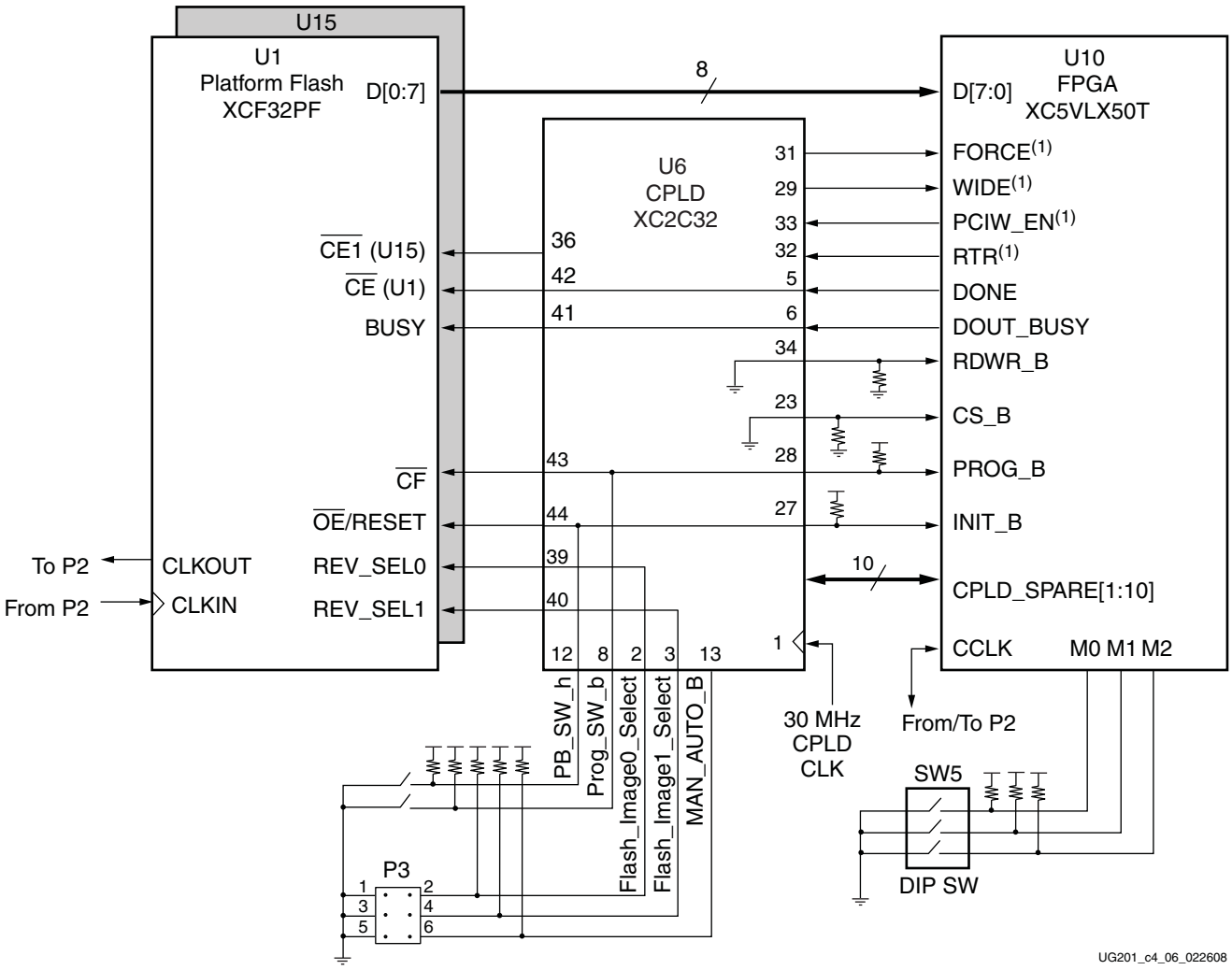

Notes:

1. FORCE, WIDE, PCIW_EN, and RTR are FPGA general-purpose I/Os.

Figure 4-6: **CPLD Configuration for Static Configuration**

Table 4-6: **Bitstream Selection Setting for Header P3**

Bitstream Revision	Jumper Settings for P3
0 (U1)	1-2, 3-4, and 5-6
1 (U1)	3-4 and 5-6
0 (U15)	1-2 and 5-6
1 (U15)	5-6

Generic Dynamic Reconfiguration

It is possible to dynamically reconfigure the entire FPGA after power-up. With this method, the CPLD loads a predetermined, default bitstream from the Platform Flash upon power-up. After initial configuration, the FPGA can signal to the CPLD that it wants to be reconfigured with a different bitstream, using the CPLD_SPARE[1:10] pins. The FPGA

simply specifies the bitstream revision along with a signal to indicate when to start the configuration process. Logic within the CPLD then controls the configuration pins to the FPGA and Platform Flash to complete the configuration cycle. This logic can be as simple as driving the REV_SEL pins to the Flash and the PROG_B pin on the FPGA to begin configuration. The MAN_AUTO_B input to the CPLD can be incorporated into the design to override the dynamic reconfiguration and allow only static configuration as described in XAPP693 [Ref 12]. This application note provides details on using a CPLD and Platform Flash to dynamically reconfigure an FPGA. Figure 4-7 illustrates this method.

The *LogiCORE Getting Started Guide for PCI-X* provides information on using the FORCE, WIDE, PCIW_EN, and RTR signals to support dynamic reconfiguration. XAPP938 [Ref 4] provides an example of dynamic FPGA reconfiguration.

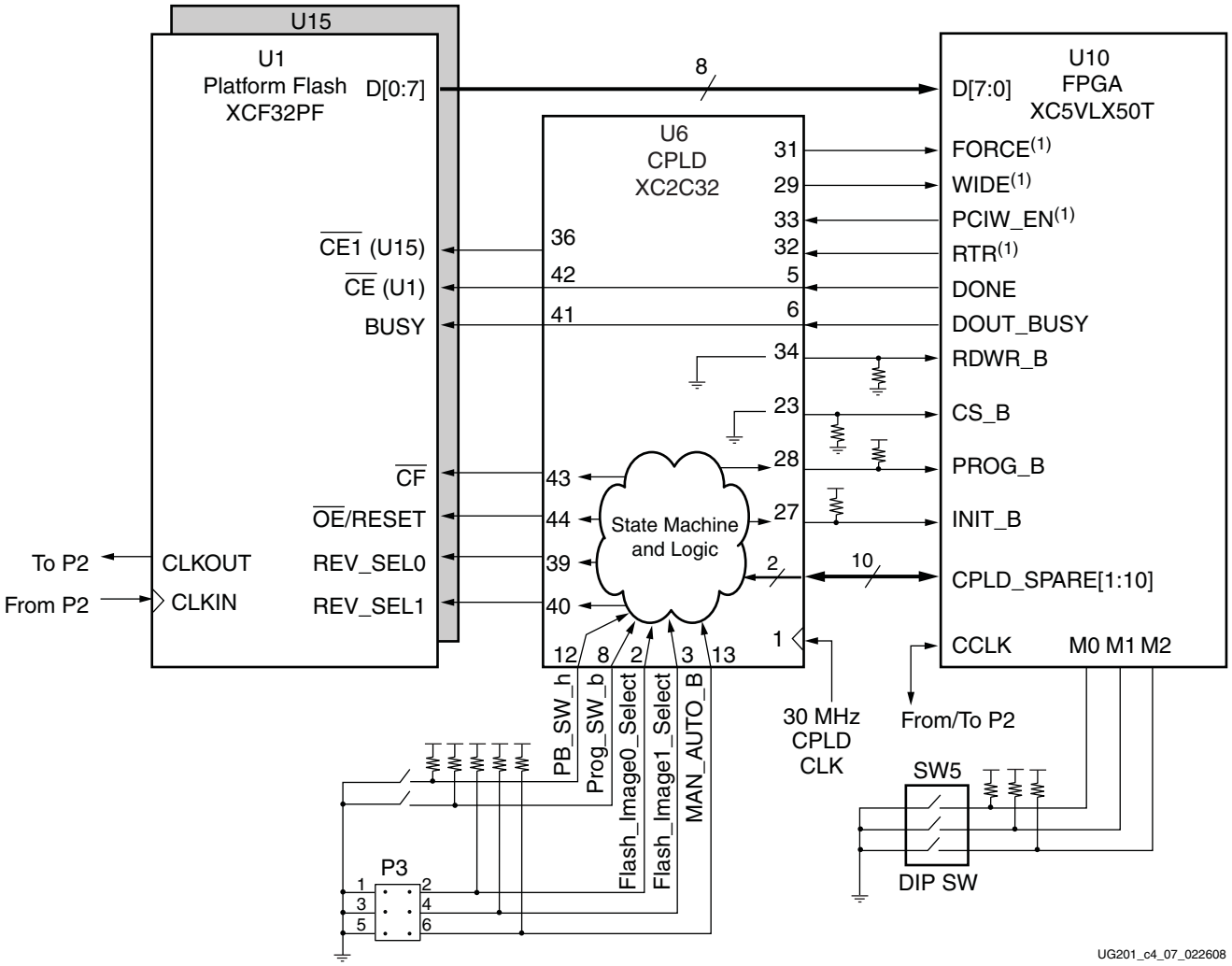

Notes:

1. FORCE, WIDE, PCIW_EN, and RTR are FPGA general-purpose I/Os.

Figure 4-7: **CPLD Configuration for Dynamic Reconfiguration**

SelectMAP Clock Selection

The default configuration of the ML555 board is to provide Master SelectMAP configuration with the FPGA providing the configuration clock (CCLK) to both the FPGA and Platform Flash devices. Slave SelectMAP configuration is not supported on the ML555.

Table 4-1 shows the Virtex-5 FPGA configuration mode along with the correct setting for the Mode Switch SW5. Table 4-7 shows the P2 connections for the CCLK source.

Table 4-7: **SelectMAP Clock Mode**

Mode	Function	Header P2 Jumper Settings
Master SelectMAP	FPGA CCLK drives Platform Flash CLKIN(1)	1-2

Notes:

1. Xilinx recommends using an FPGA configuration clock frequency of 20 MHz rather than the default 2 MHz CCLK used by the BitGen application. Refer to "Platform Flash Image Generation and Programming," page 101 for a BitGen example.

Figure 4-8 shows the clock structure for SelectMAP mode along with Header (P2).

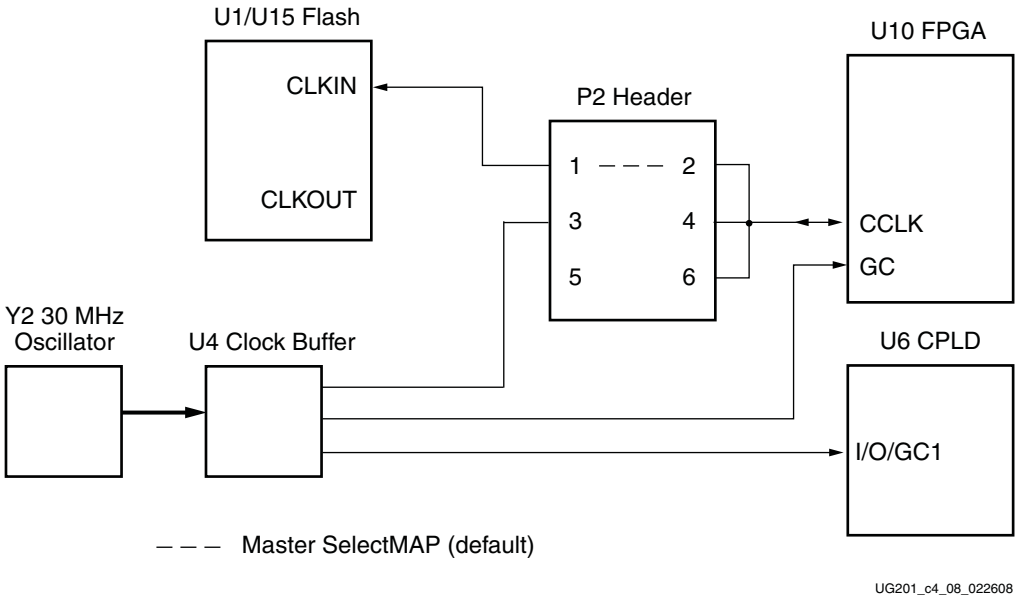

Figure 4-8: **SelectMAP Clock Circuitry**

Platform Flash Image Generation and Programming

This section provides general guidelines on how to create a PROM image file with two design revisions (bitstreams) using the Configuration File Wizard in the iMPACT FPGA programming tool. Online documentation from the Configuration File Wizard and iMPACT is available through the **Help -> Help Topics** menu selection in iMPACT. The Xilinx *Development System Reference Guide* provides details on how to create a PROM image file using PROMGen. The *Development System Reference Guide* provides details on bitstream file options available with the BitGen application. For example, the FPGA CCLK frequency can be controlled using a BitGen option. To select a 20 MHz configuration clock (CCLK) frequency (versus the default 2 MHz), the following command syntax is used:

```
bitgen -g ConfigRate:20 <input file>
```

Setup

Creating a PROM File in Command Line Mode

The Xilinx PROMGEN application can be used to create a PROM file from configuration BIT files for use in programming XCF32P Platform Flash devices on the ML555 board. PROMGEN is run in command line mode.

This design example assumes two ML555 design BIT files are copied to a directory where output files are to be stored and that the PROMGEN application is invoked from this same directory. An example command line entry to take two XC5VLX50T-FF1136 design BIT files, `design1.bit` and `design2.bit` and create an MCS output file called `ml555xcf32p` is as follows:

```
promgen -w -p mcs -c FF -o .//ml555xcf32p -ver 0 .\design1.bit -ver 1 .\design2.bit -x xcf32p
```

Where:

- -w overwrites any existing output design files
- -p is the PROM output file format. Use MCS format for XCF32P devices.
- -c is fill data of `0xFF`
- -o is the output file name created in the directory from which PROMGEN is called
- -ver x is either design revision 0 or design revision 1
- -x is the device type of XCF32P used on the ML555 board

Enter **`promgen`** in the command window with no options to see the command syntax options.

PROMGEN creates four output files with file extensions of MCS, CFI, PRM, and SIG. The MCS and CFI files should always be used when programming the Platform Flash. The CFI file contains configuration information that iMPACT uses for programming designs with multiple revisions.

iMPACT and PROMGEN Wizard GUI Mode

Follow these steps to prepare the PROM files using iMPACT and the PROMGEN Wizard:

1. Open iMPACT: **Start →All Programs →Xilinx ISE →Accessories →iMPACT.**
2. Double-click **`PROM File Formatter`**.

3. Under **Prepare PROM Files**, shown in Figure 4-9, select the following:
   - Under **I want to target a**, click the **`PROM Supporting Multiple Design Versions`** radio button and select **`XCFP PROM with Design Revisioning`** from the drop-down menu.
   - Under **PROM File Format**, select the **`MCS`** radio button.
   - In the **PROM File Name** box, enter a filename of your choice. The design example uses `ml555xcf32p`.
   - In the **Location** box, browse to or enter the directory where your bitstreams are located. This directory is the same location as where the generated PROM output files are stored. The design example uses `C:/Data`.
   - Click **`Next`**.

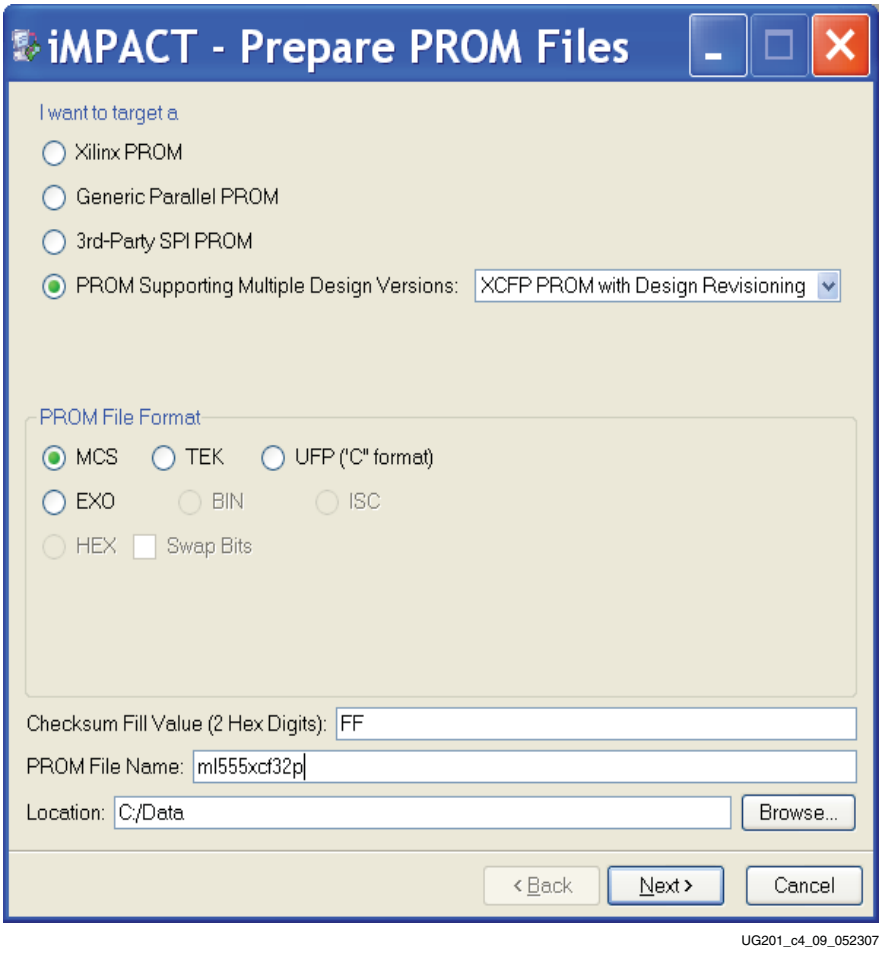

Figure 4-9: **Prepare PROM Files**

Specifying the Xilinx PROM Device

Follow these steps to specify the PROM device:

1. Under **Specify Xilinx PROM Device**, shown in Figure 4-10, select the following:
   - From the Number of Revisions drop-down box, choose 2. The XCF32P supports a maximum of two XC5VLX50T design images.
   - From the Select a PROM drop-down boxes, choose **xcfp** and **xcf32p**, then click **Add**.
   - Click **Next**.

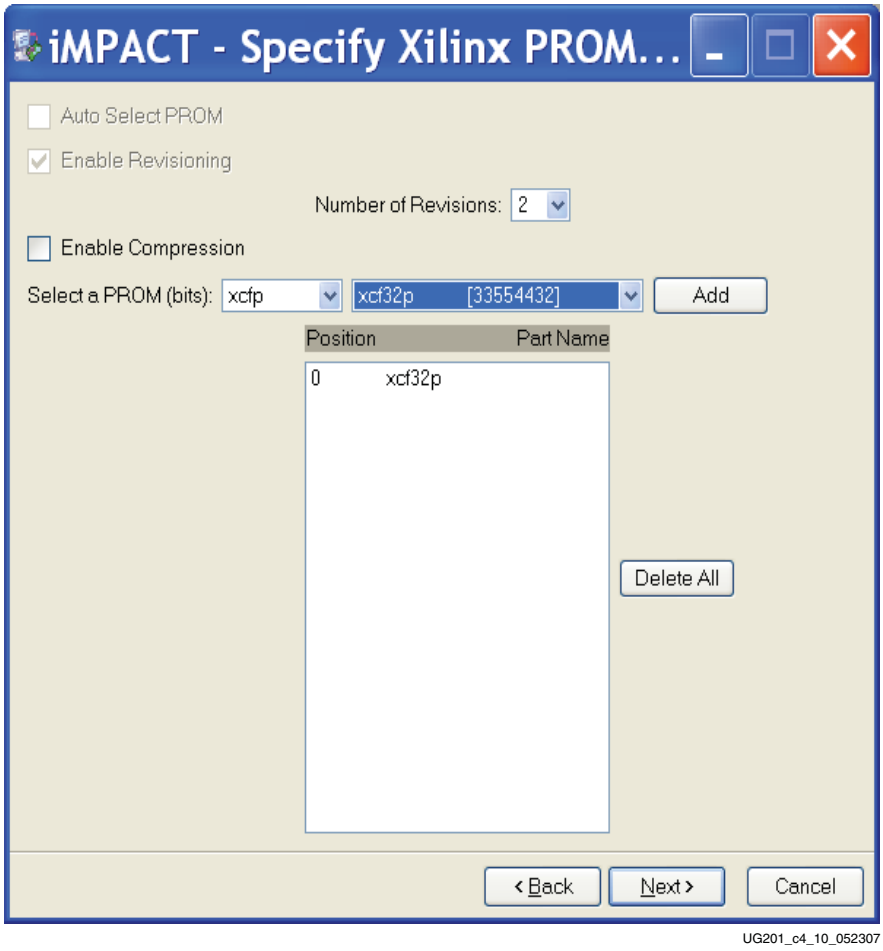

Figure 4-10: **Specify Xilinx PROM Device**

2. Under **File Generation Summary**, click **Finish**. Click **OK** to start adding device files for Revision: 0.
3. Under **Add Device**, browse for the bitfile you want for Configuration Address 0, and click **Open**.
4. Under **Add Device →Would you like to add…to Revision:0?**, click **No**.
5. Browse for the bitfile you want for Configuration Address 1, and click **Open**.
6. Under **Add Device →Would you like to add…to Revision:1?**, click **No**.
7. Under **Add Device →You have completed the device file entry**. Click **OK** to continue.
8. Under **Available Operations Are**, double-click on **Generate File**.

9. Under **Generate PROM File →Do you want to compress file?**, click **No**.
10. After a pause, **PROM File Generation Succeeded** is displayed.

A PROM image file is now created and is ready for programming into the ML555 board. A fully populated PROM file (.mcs) with two design revisions must always be generated even if all of the Configuration Addresses (0, 1, 2, or 3) in the Platform Flash are not programmed. The unused revisions can be populated with dummy bitstreams.

PROMGEN generates four output files. The MCS and CFI files should always be in the same directory when the XCF32P Platform Flash is programmed. The CFI file contains configuration information used by iMPACT during programming operations, and the file is unique for each MCS file created.

Programming the PROM

Connect the programming cable between the computer and the ML555 board. Apply power to the ML555 board after the computer boots. To program the XCF32P PROM, follow these steps:

1. Open **iMPACT**: **Start →All Programs →Xilinx ISE →Accessories →iMPACT**.
2. Double-click the **Boundary Scan** menu option.
3. Right-click on **Right click to Add Device or Initialize JTAG chain.** Select **Initialize Chain** as shown in Figure 4-11. After a pause, the ML555 JTAG chain is graphically displayed, as shown in Figure 4-12.
4. **Boundary Scan… Summary** indicates four devices are found. Under **Assign New Configuration File**, click **Cancel All**.
5. Double-click the third (or fourth) device, **xcf32p**. The ML555 board contains two Platform Flash devices.
6. Under **Assign New Configuration File**, browse to the directory where the MCS and CFI file are stored on the computer. Click the MCS file to select it and then click **Open**.
7. Right-click the xcf32p icon and select **Program**.
8. Under the **Programming Properties** menu, shown in Figure 4-13, select **Parallel Mode**.
9. Under the **Advanced PROM Programming Options** menu, shown in Figure 4-14, select **PROM is Slave** (clocked externally).
10. In the **Revision Properties** menu, shown in Figure 4-15, select the following:
    - In the **Design Revision** column, check the **Rev** boxes for the revisions to be programmed. For this example, both **Rev0** and **Rev1** are selected. One XCF32P device stores a maximum of two XC5VLX50T FPGA design images.
    - In the **Erase** column, check the **Erase** boxes for revisions that are going to be programmed. In general, you should make sure that the device is erased before programming. For this example, the previous **Rev0** and **Rev1** PROM design images are to be erased before new design images are programmed.
    - Click **OK** to begin programming the selected Platform Flash and PROM file using Boundary-Scan. After a pause, **Program Succeeded** is displayed. PROM programming is complete.

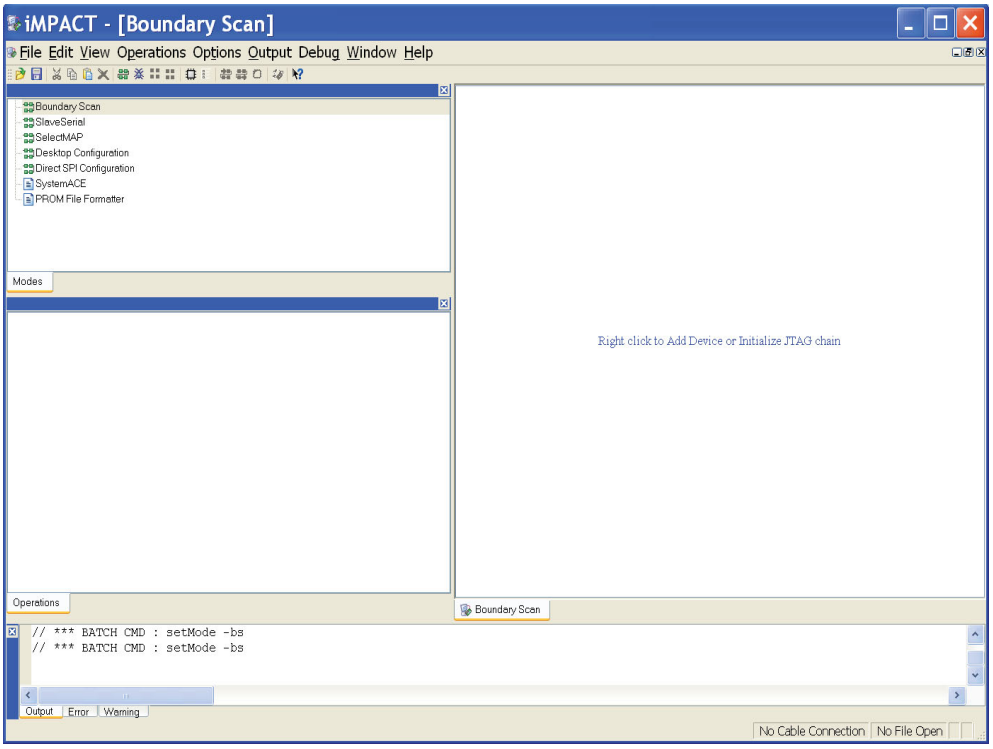

UG201_c4_14_052307

Figure 4-11: **Initialize JTAG Chain with iMPACT Tool**

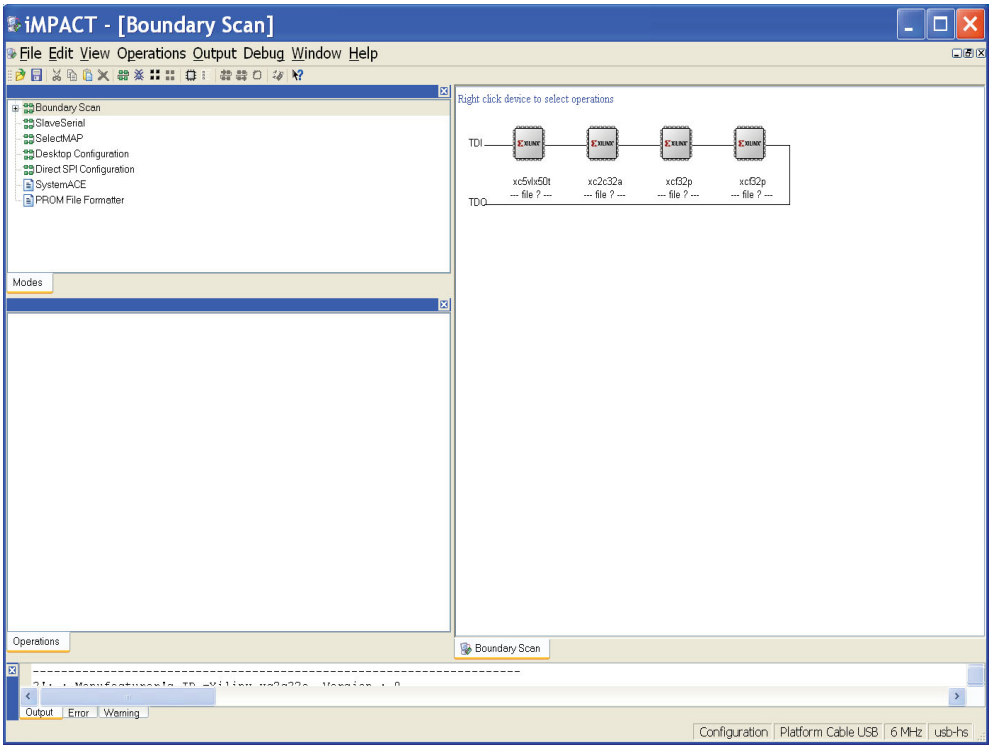

UG201_c4_15_052307

Figure 4-12: **ML555 JTAG Chain with All Four Programmable Devices in the Chain**

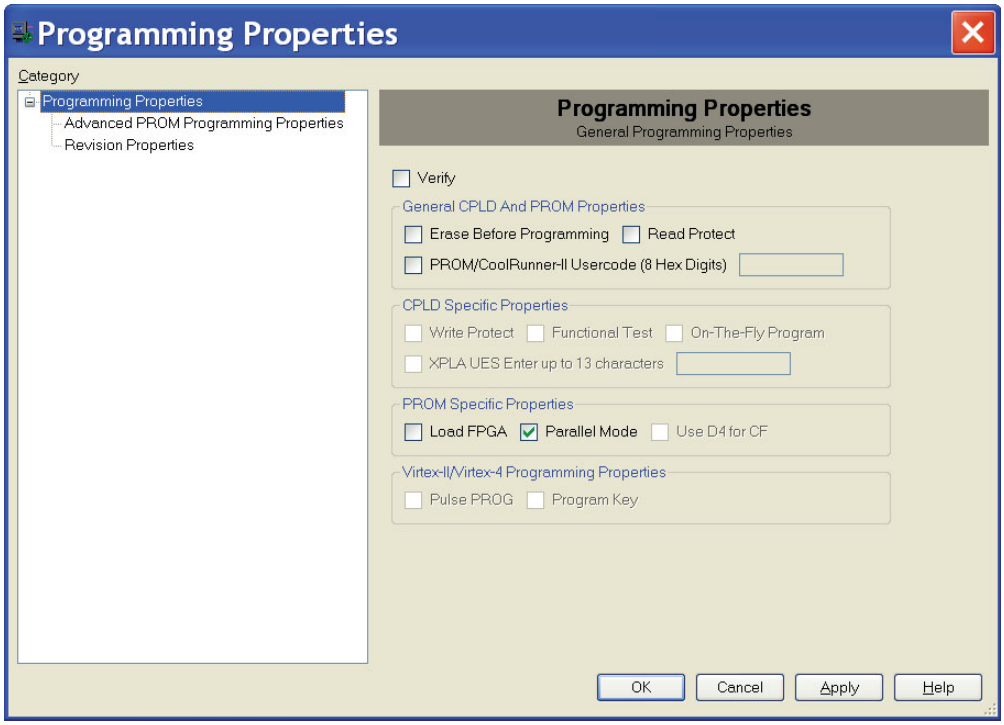

UG201_c4_11_052307

Figure 4-13: **Programming Properties**

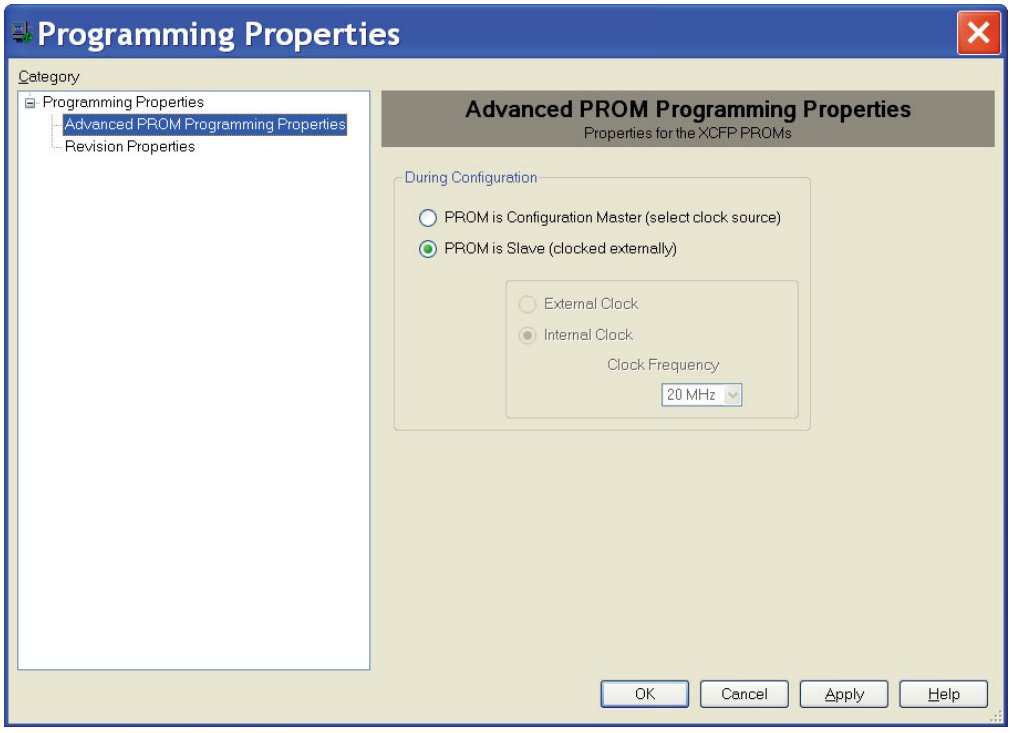

UG201_c4_12_022007

Figure 4-14: **Advanced PROM Programming Properties**

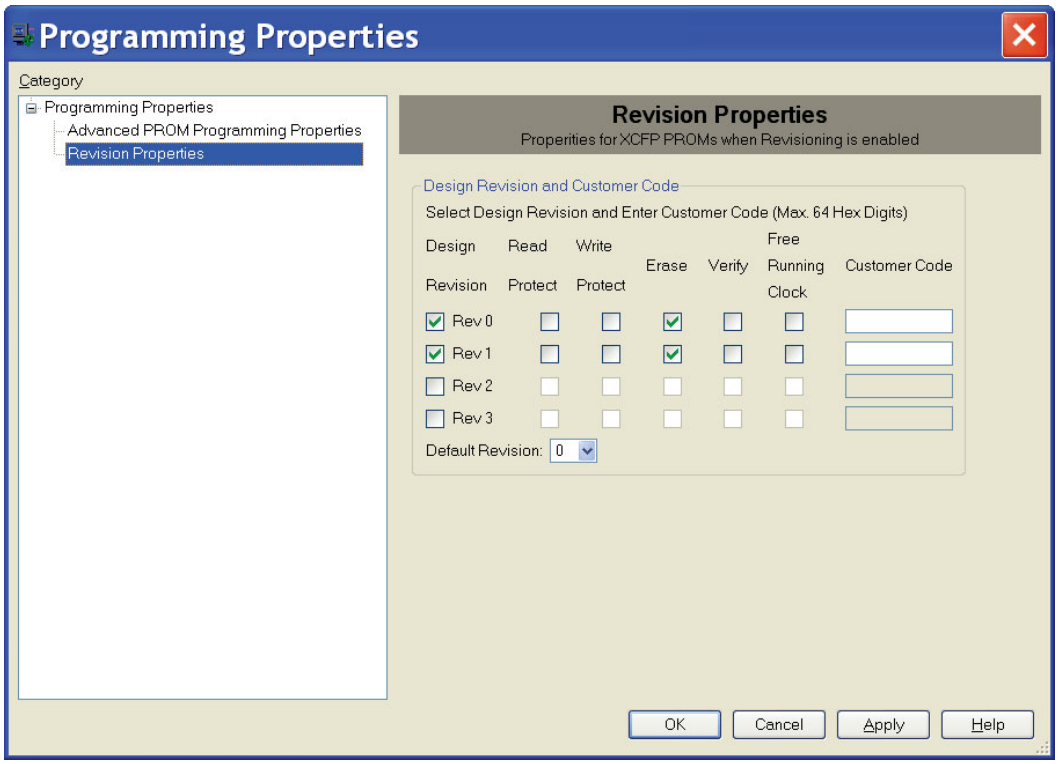

Figure 4-15: **PROM Revision Properties**