VT5366

1.8V optical mouse sensor

Features

- Pin compatible with VT5364
- Can be used (with external MCU) in all optical mouse applications
- Single +1.8V Supply
- Very low power operation, enabling long battery life
- CPI programmable up to 3200 (default 800 cpi)
- Up to 9,375 frames per second
- Tracking at up to 40 ips
- I2C interface
- On-chip ADC for voltage level reporting
- Proven, high volume package technology - smallest package currently available on market
- Minimal external circuitry
- Low battery indicator
- Suitable for use with both LED and laser (VCSEL) light sources
- Reference Designs available
- Applications:
  USB/PS2, Wireless & Bluetooth optical mice

Description

The VT5366 has been designed for pin to pin compatibility with the VT5364[(a)] and is STMicroelectronics first generally available chip for use in all optical mice applications: Wired - USB (Low and Full Speed) and PS2; Wireless - 27MHz/2.4GHz and BlueTooth. The device has been designed to provide long battery life whilst enabling excellent navigation control and precision on a wide range of surfaces.

Housed in the smallest, currently available, package (7mmx7mm), the chip is suitable for use in small form-factor mice demanded by laptop users. Minimal external circuitry is required thereby reducing BOM and assembly costs.

The VT5366 sensor will operate over a wide range of illuminant wavelengths. For devices operating at approx 850nm (IR LED or VCSEL), the on-die automatic exposure controller (AEC) will compensate for the change in sensitivity compared to 640nm (red LED). Motion performance can be improved by increasing the current supplied to the navigation LED.

A specifically designed LED optical system with integrated light guide and lens is available along with an aperture piece which clips the package in place aligning the optics. This has been optimized for low cost, space saving and ease of assembly in high volume mouse manufacture. No kapton tape is required in the assembly process. Please contact STMicroelectronics for supplier details.

Technical specifications

Resolution	CPI programmable up to 3200. Default 800 CPI
Pixel size	30.4 µm
Array size	20*20 pixels
Frame rate	Up to 9,375 frames/second
High speed motion detector	Accurate motion up to 40 ips
Clock	6MHz
Supply voltage	1.8V
Supply current	RUN (9.6Kfps) - 9mA Power Down - 10µA typ. excluding LED
Operating temperature	[0: 60] °C
Package type	7*7mm 32 lead LOQFP (Low profile Optical Quad Flat Pack)

a. To make use of the new battery level function the PCB and firmware will need to be modified

Contents

1 **Introduction** 3

2 **Functional block diagram** 4

3 **Design notes** 5

3.1 Pin assignment 5

3.2 Optical centre 5

3.3 Sensor orientation on PCB 6

3.4 Driving the navigation LED 7

4 **Wireless reference design board** 8

4.1 Pin description 9

4.2 Bill of materials 10

5 **Operation** 11

5.1 I2C communication 11

5.2 Register map 11

5.2.1 Read motion 11

5.2.2 Customer access 11

5.3 Initialization 15

5.4 Reading the X any Y motion vectors 15

5.5 Operating mode 16

5.6 Motion sensitivity in non RUN modes 16

5.7 Overall system performance 16

6 **Serial control bus** 17

6.1 General description 17

6.2 Serial communication protocol 17

6.2.1 Data format 17

6.2.2 Message interpretation 18

6.3 Types of messages 19

6.3.1 Single location, single data write 19

6.3.2 Multiple location write 19

6.3.3 No data write followed by same location read 20
6.3.4 Multiple data read 20

7 Optics assembly 21
7.1 Mouse assembly guidelines 23

8 LED selection 24
8.1 Overview 24
8.2 Key LED parameters 24
8.3 VCSEL & IR Illumination 24

9 Electrical characteristics 25
9.1 Typical operating conditions 25
9.2 Logic IO 25

10 Package mechanical data 26
10.1 LOQFP package guidelines 27

11 Ordering information 28

12 Revision history 28

1 Introduction

The VT5366 sensor is a single-chip solid state optical tracking engine with no moving parts. It allows the creation of a highly performing, fully featured wired or wireless mouse with the minimum of external components. The device, which provides excellent navigation control and precision, works on a wide range of surfaces.

VT5366 incorporates features that simplify product design and reduce time to market. By minimizing the number of external components, the mouse manufacturer has flexibility for layout and product design.

ST has worked with optical component suppliers to produce a single piece light guide with integrated lens, and makes recommendations for a compatible LED. Details of the optics and LED are included in this document.

Figure 1. STV-366-R01 reference design mouse.



2 Functional block diagram

Figure 2. Block diagram

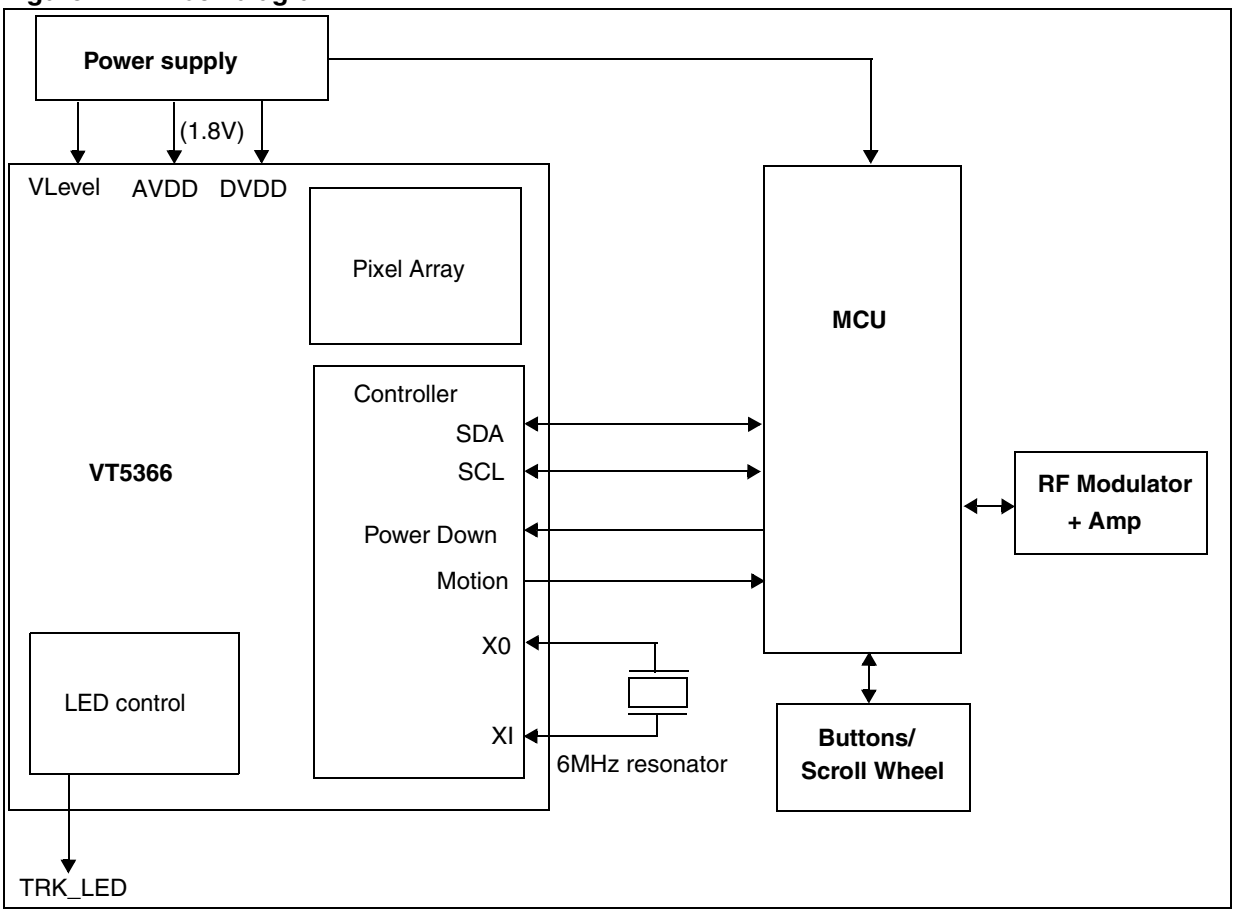

3 Design notes

3.1 Pin assignment

Figure 3. VT5366 pin assignment

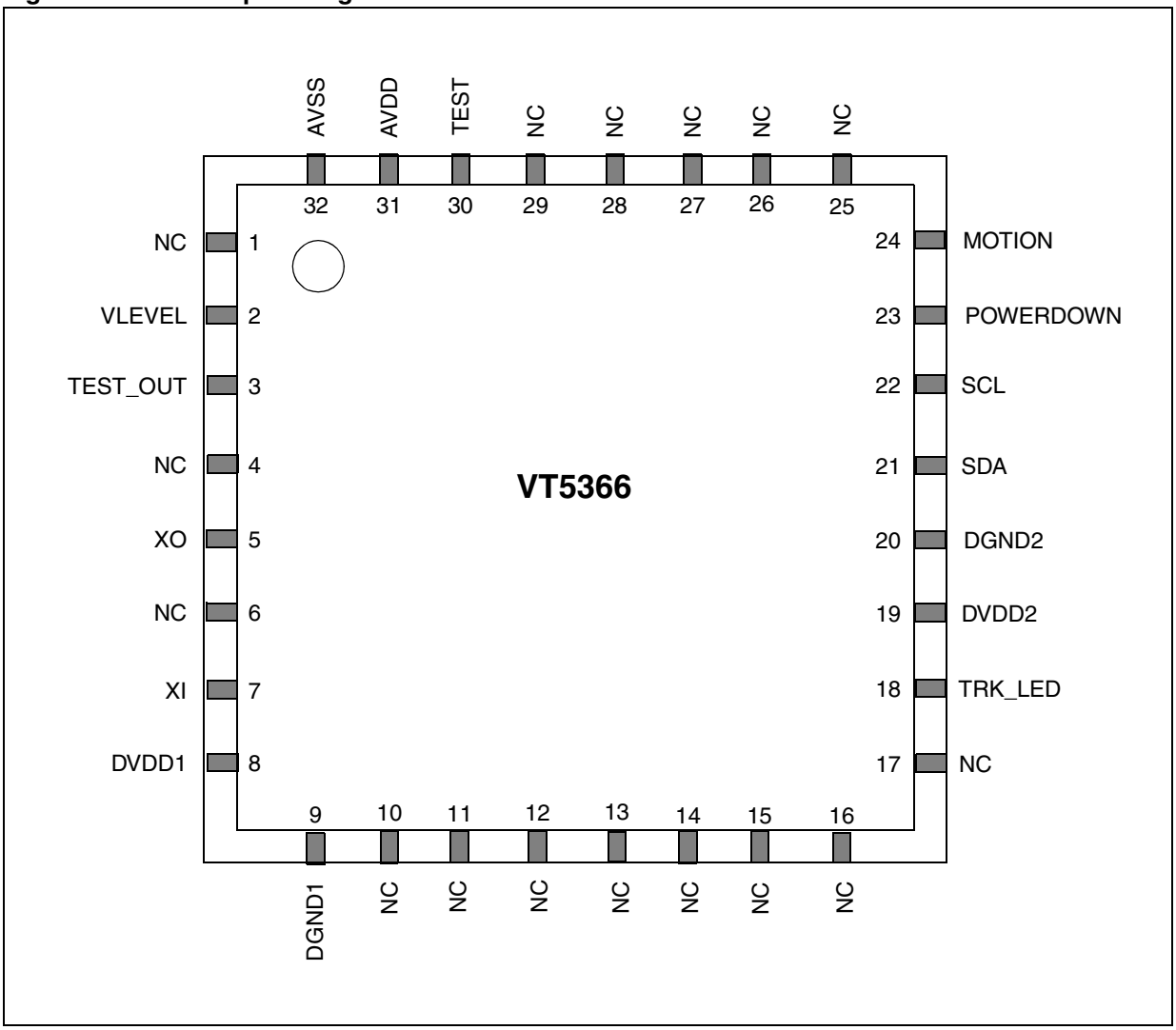

3.2 Optical centre

The optical centre of the VT5366 is NOT in the centre of the package, it is offset by -0.243mm in the X-axis and 0.215mm in the Y axis with respect to the centre of the package as shown in *Figure 4*. The PCB designer must take this into account when laying out the PCB.

Figure 4. VT5366 optical centre

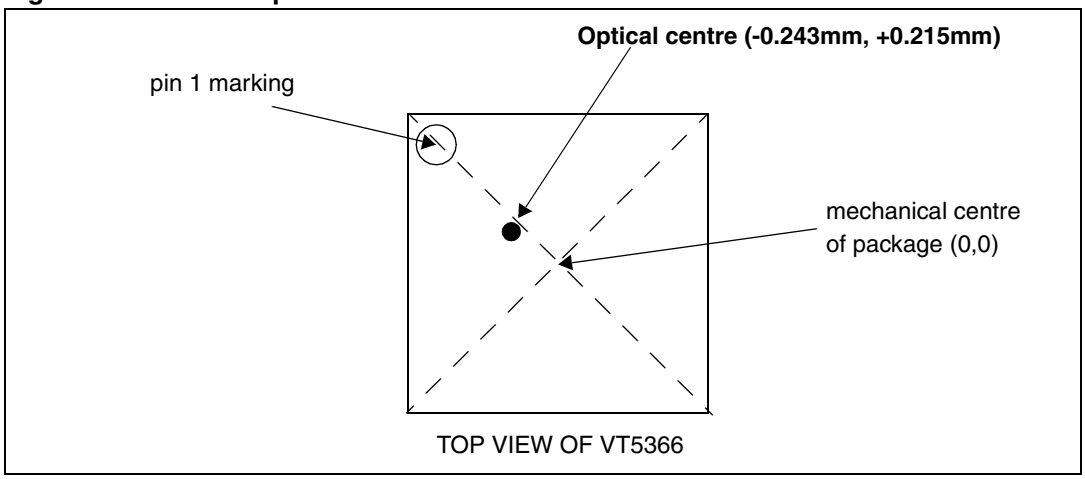

3.3 Sensor orientation on PCB

The VT5366 must be orientated correctly on the PCB in order to move the cursor in the correct directions when the mouse is moved. This is shown in *Figure 5*.

Figure 5. VT5366 optical centre

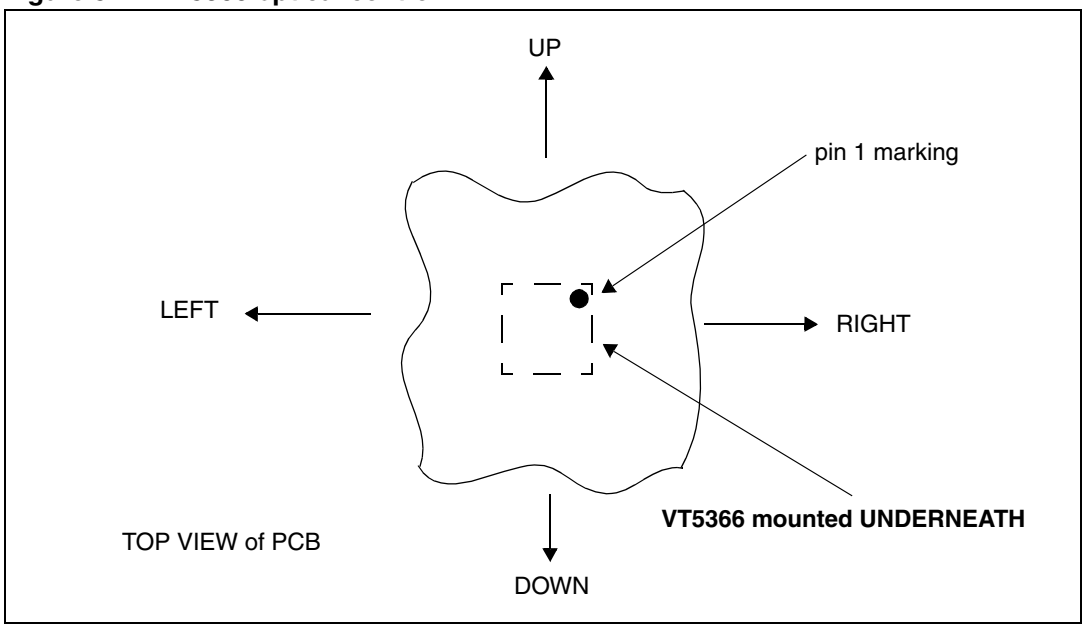

3.4 Driving the navigation LED

The VT5366 provides an output (TRK_LED) to drive the LED that is used to illuminate the mousing surface. This output is active HIGH but cannot be used to drive the navigation LED directly. An external NPN bipolar transistor is recommended as shown in the reference schematic (*Figure 6*). The maximum current through the LED is controlled by a resistor (R1 on the Reference Schematic).

Note: The navigation LED, controlled by the VT5366, is used in a non-continuous mode. The duty cycle of the LED is varied by the exposure controller inside the VT5366 and has a maximum value of 40 % (on very dark surfaces).

4 Wireless reference design board

Figure 6. Wireless reference schematic

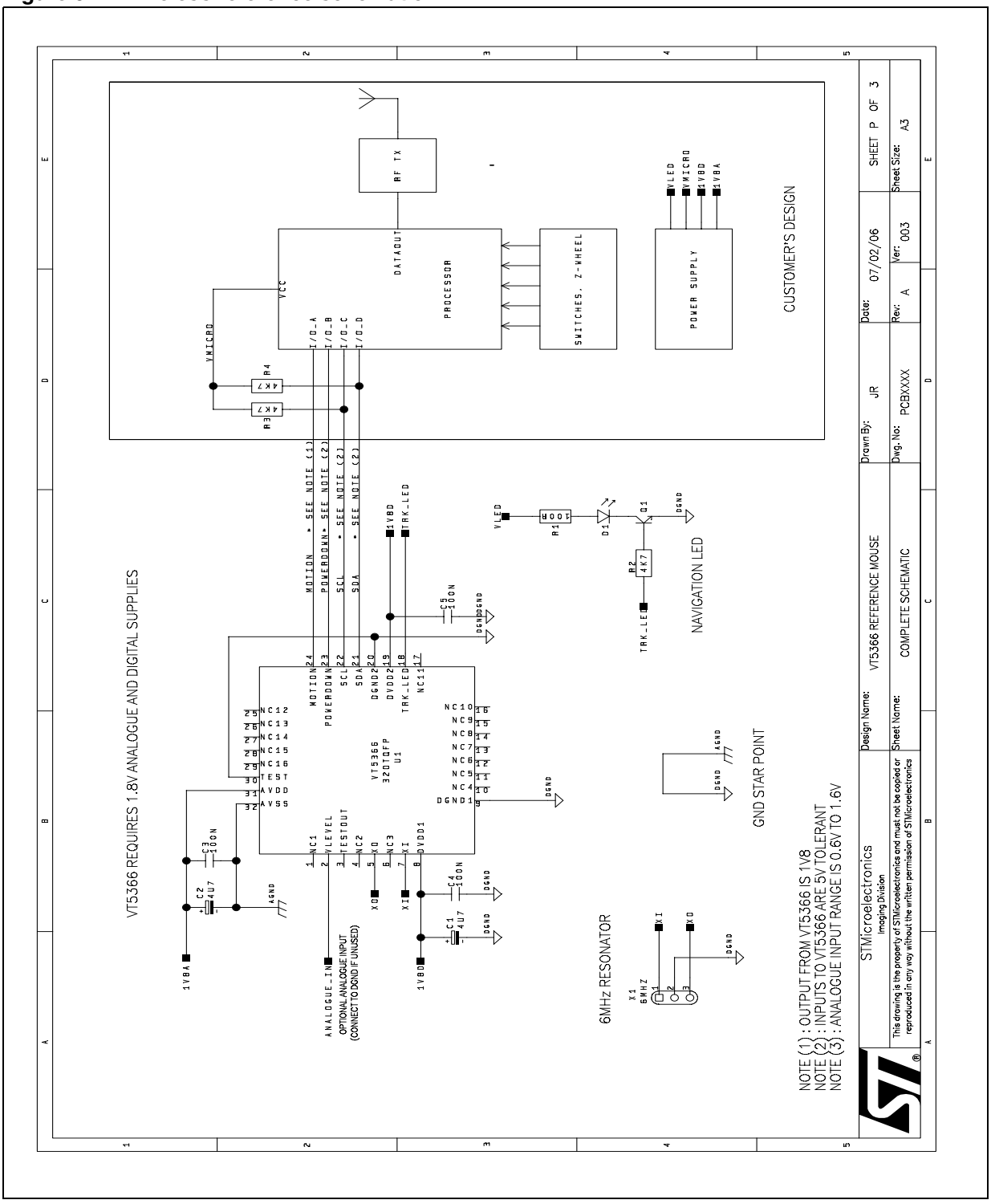

4.1 Pin description

Table 1. VT5366 pin description

Pin No.	Pin name	Type	Description
2	VLevel	CMP	Battery voltage detection input
3	Test_Out	I/O	No Connect
5	X0	OSC	6MHz resonator
7	XI	OSC	6MHz resonator
8	DVDD1	PWR	1.8V Digital Supply
9	DGND1	PWR	Digital Ground
18	TRK_LED	I/O	Navigation LED Output
19	DVDD2	PWR	1.8V Digital Supply
20	DGND2	PWR	Digital Ground
21	SDA	I/O	I2C SDA Line
22	SCL	I/O	I2C SCL Line
23	POWERDOWN	I/O	Wake up
24	MOTION	I/O	Motion detect
31	AVDD	PWR	1.8V Analog Supply
32	AVSS	PWR	Analog Ground

Note: All other pins are NOT CONNECTED

4.2 Bill of materials

Table 2. Bill of materials: main components

Ref.	Description	Manufacturer	Part Number
366 Block			
U1	Optical Mouse sensor	STMicroelectronics	VT5366V032
X1	6MHz resonator		
D1	Navigation LED	See *Chapter 8: LED selection*	
Q1	NPN bipolar transistor to drive D1	Standard component - many suppliers	
C1, C2	4u7 tantalum capacitor	Standard component - many suppliers	
C3-C5	100 nF ceramic capacitor	Standard component - many suppliers	
R1	100 Ω resistor	Standard component - many suppliers	
R2-R4	4k7 resistors	Standard component - many suppliers	
Processor/RF Block			
SW1-4	Switches	Omron	D2F series
SW5	Mechanical encoder (scroll-wheel)	Alps	EC10E series
Additional items not mounted on the PCB			
	Optics Assembly	See STV-366-R0X User Manuals	
	Aperture Stop	See STV-366-R0X User Manuals	

5 Operation

The VT5366 provides X and Y motion information to an external processor, communication takes place over a standard I2C bus.

5.1 I2C communication

The VT5366 is a standard I2C slave device. The 7-bit device address is 0x10, making the I2C address 0x20 for writing and 0x21 for reading (the LSB is the read/write bit). The maximum I2C clock speed is 400kHz. Full details of the I2C interface are given in *Chapter 6*.

5.2 Register map

The VT5366 register space allows for up to 255 registers to be addressed. The sensor address (ID) is 0x20.

5.2.1 Read motion

The key registers that are required are listed below.

Table 3. Key register

Index (hex)	Function	Note
0x20	[1] automatic motion reset	set bit [1] to enable automatic reset of motion registers
0x21	[7:0] X-motion	2's complement format
0x22	[7:0] Y-motion	2's complement format
0x2F	[7:0] Minimum motion search vector	Change sensitivity when going into non-run mode

5.2.2 Customer access

The rest of the customer accessible registers are listed below.

Note: Please DO NOT write to any Addresses not mentioned below as this will affect the chip's performance.

Table 4. Reg [#0x00 - 0x01] Device revisions

Add	Bits	Name	R/W	Default	Description
0x00	[7:0]	Device Hardware revision	RO	1	
0x01	[3:0]	Device Firmware revision	R/W	0	

Table 5. Reg [#0x05] - IO_Control

Add	Bits	Name	R/W	Default	Description
0x05	[0]	Motion	R/W	0	If set, this bit sets MOTION pin HIGH, otherwise sets it low.
	[1]	Power_Down	RO		This bit reflects the actual value of the signal on the POWER_DOWN pin.
	[2]	Motion PIN polarity	R/W	0	0: MOTION is high to indicate that motion has been received 1: MOTION is low to indicate that motion has been received
	[3]	Motion PIN OD mode	R/W	0	0: MOTION output is CMOS 1.8V 1: MOTION output is OpenDrain 5V tolerant.

Table 6. Reg [#0x20]: Clear_Motion

Add	Bits	Name	R/W	Default	Description
0x20	[0]	Empties Motion accumulators	R/W	0	This bit clears both X & Y accumulators from the current reported value. In case of severe overflows generated by great motion values, several poll motions may be needed to completely flush out motion from the integrator.
	[1]	Enable Automatic motion integrators to empty automatically when reading		0	For X/Y motion reads via I^2C i/f, it is recommended that this bit is set to 1 at power-up by the master. This way X & Y motion registers are actually cleared automatically after their respective read. X/Y motion registers should be read in a multiple read sequence.

Table 7. Reg [#0x21]: X_motion

Add	Bits	Name	R/W	Default	Description
0x21	[7:0]	X_motion	RO	0000_0000	This register holds the overall X movement data since last polling was done. Value is 8 bit 2's complement.

Table 8. Reg [#0x22]: Y_motion

Add	Bits	Name	R/W	Default	Description
0x22	[7:0]	Y_motion	RO	0000_0000	This register holds the overall Y movement data since last polling was done. Value is 8 bit 2's complement.

Table 9. Reg [#0x23] Overflow / No motion

Add	Bits	Name	R/W	Default	Description
0x23	[0]	X_overflow	RO		This register records if the X - motion integrator has reached its limit.
	[1]	Y_overflow			This register records if the Y - motion integrator has reached its limit.
	[3]	No motion			Flag is set when there has been no event at the moment the host is polling for movement.

Table 10. Reg [#0x27]: Motion Directions & Polarities

Add	Bits	Name	R/W	Default	Description
0x27	[0]	Invert X	R/W	0	Allows X to be inverted
	[1]	Invert Y		1	Allows Y to be inverted
	[3]	Swap X/Y		1	Replaces X with Y and Y with X

Table 11. Reg [#0x29]: Minimum Features

Add	Bits	Name	R/W	Default	Description
0x29	[7:0]	Min_features[13:6]	R/W	0000_0000	This register represents the feature threshold below which motion is no longer valid. This is linked to the value reported in registers 0x31 & 0x32. If Features [13:6] (reg0x31/32) < Min features (0x29), then X/Y motion = 0

Table 12. Reg [#0x2A]: Motion resolution: Count/Inch

Add	Bits	Name	R/W	Default	Description
0x2A	[7:0]	Motion resolution	R/W	0000_1000	Sets Resolution as CPI: 0x8 - 400CPI 0x10 - 800 CPI 0x20 - 1600 CPI 0x40 - 3200 CPI

Table 13. Reg [#0x2F]: Minimum Motion Search Vector

Add	Bits	Name	R/W	Default	Description
0x2F	[7:0]	Minimum search vector	R/W	0001_0000	0x40 - increase sensitivity when going into non-run mode 0x10 - default setting in run mode

Table 14. Reg [#0x31 - 0x32]: Surface Feature Report

Add	Bits	Name	R/W	Default	Description
0x31	[15:8]	Features count	RO		Current field feature count report
0x32	[7:0]				

Table 15. Reg [#0x40 - 0x41]: Exposure Setting

Add	Bits	Name	R/W	Default	Description
0x40	[1:0]	Exposure [9:8]	R/W	0x01ff	Exposure value in CLK12 periods units. Default is 511.-
0x41	[7:0]	Exposure [7:0]			

Table 16. Reg [#0x43]: AutoExposure Enable

Add	Bits	Name	R/W	Default	Description
0x43	[4]	AEC enable	RW	1	Enable auto exposure

Table 17. Reg [#0x47]: ADC data

Add	Bits	Name	R/W	Default	Description
0x47	[7:0]	ADC_IN converted data	RO	0000_0000	This register holds the current converted data from the ADC_IN analog input pin. The data range is as follows: 0000_0000: ADC_IN = 0.6V 1111_1111: ADC_IN = 1.6V The response is linear for each value in between, ADC steps are 1V/256 = 3.9mV.

Table 18. Reg [#0x4F]: Exposed image Max reported value

Add	Bits	Name	R/W	Default	Description
0x4F	[7:0]	Exp max value	RO	0000_0000	This registers holds the maximum pixel value (before CDS) for the current frame. It shows if some pixels are saturated or not. This register should be used as the AEC metric.

5.3 Initialization

It is recommended that the VT5366 autoclear function is activated during a read. To do this the processor should write the value 0x02 to register 0x20 after enabling the VT5366 (by setting PowerDown LOW). This only needs to be done once after the power supply has been applied.

5.4 Reading the X any Y motion vectors

It is recommended that the processor reads the motion data at a rate of around every 2ms.

The X and Y motion information is read using a single I2C ‘multiple read’ transaction. The sequence is as follows;

(1) Read I2C registers 0x21 (contains X-motion) and 0x22 (contains Y-motion).
Note that these two registers MUST be read with a single I2C ‘multiple read’ transaction. See *Chapter 6*.

As shown above X and Y motion vectors can be read from registers 0x21 and 0x22. The values are in 2’s complement notation to allow positive and negative motion to be represented. The values read represent the accumulated motion since the last time the registers were read. As soon as the registers have been read they will automatically be reset to 0 and the Motion Detect output (pin 24) will go LOW.

5.5 Operating mode

The VT5366 itself has only two operating modes; **ON** - when PowerDown = 0 and **OFF** - when PowerDown = 1

Overall system behavior is controlled by the external microprocessor which can switch the VT5366 on and off with various duty cycles. Typical operation is described below.

1. The processor enables the VT5366 by setting PowerDown (pin 23) LOW.
2. The processor delays for $\mathbf{T_{on}}$ (typically 250µs) to allow some frames to be captured.
3. The processor then monitors Motion Detect to see if motion has occurred. If Motion Detect (pin 24) = 0 then no motion has been detected and the VT5366 can be put back to sleep by setting PowerDown HIGH.
4. The processor then waits for a time $\mathbf{T_{sleep}}$ and returns to step (1).
5. If motion IS detected at step (3) i.e. Motion Detect = 1 then the motion vectors are read over the I2C interface. The processor can then monitor Motion Detect again to see if further motion has occurred.

5.6 Motion sensitivity in non RUN modes

Before going into a non-run mode write 0x40 to register 0x2F (ie. when the mouse goes into idle mode), this will make the motion engine more sensitive to frame change at lower non-run frame rates on low contrast surfaces.

When waking up (on motion detect) re-write the default 0x10 to register 0x2F to maintain running motion accuracy.

5.7 Overall system performance

The overall performance of a wireless mouse system depends on many different factors including:

- Battery choice
- Power supply design
- Choice of external microprocessor
- Design of firmware running in external processor
- Design of external RF transmission circuitry
- User model i.e. how much time the mouse is actually being used and surface type.

Note: See Applications Note AN2473 for details on Optical Wireless Mouse Design using the VT5366.

6 Serial control bus

6.1 General description

The 2-wire I2C serial interface bus is used to read and write the VT5366 registers.

The main features of the serial interface include:

- Variable length read/write messages
- Indexed addressing of information source or destination within the sensor
- Automatic update of the index after a read or write message
- Message abort with negative acknowledge from the master
- Byte oriented messages

6.2 Serial communication protocol

The co-processor must perform the role of communication 'master' and the sensor acts as a 'slave'. The communication from host to sensor takes the form of 8-bit data with a maximum serial clock frequency of 400 kHz. Since the serial clock is generated by the bus master it determines the data transfer rate. Data transfer protocol on the bus is illustrated in *Figure 7*.

Figure 7. Serial Interface data transfer protocol

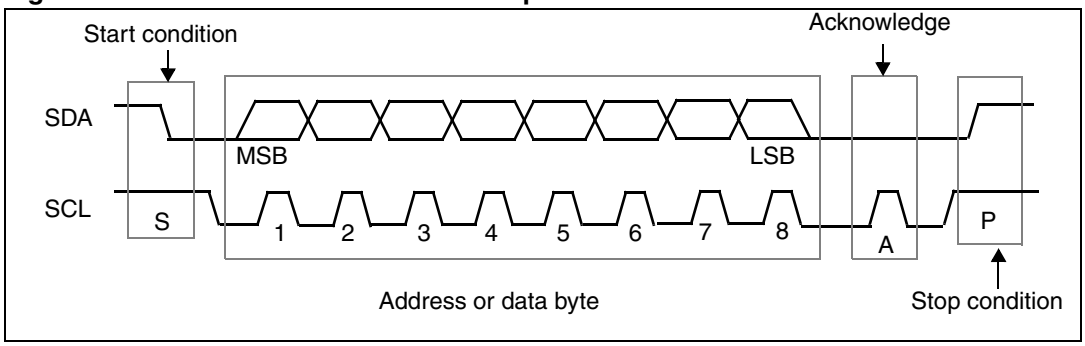

6.2.1 Data format

Information is packed in 8-bit packets (bytes) always followed by an acknowledge bit. The internal data is produced by sampling *sda* at a rising edge of *scl*. The external data must be stable during the high period of *scl*. Exceptions to this are *start* (S) or *stop* (P) conditions when *sda* falls or rises respectively, while *scl* is high.

A message contains at least two bytes. Its begins with a *start* condition and ends with either a *stop* condition *or* another *start* condition In this situation the (second) *start* is referred to as a *repeated start* and is shown as *(Sr). The* first byte of a transaction always contains the device address byte in the upper 7 bits with the LSB indicating the data direction; 1 for *read or 0 write*. Thus the 8 bit device address for the VT5366 is 0x20 for writing and 0x21 for reading.

Figure 8. VT5366 serial interface address

0	0	1	0	0	0	0	R/$\overline{W}$

The byte following the address byte contains the address of the first data byte (also referred to as the *index*). The serial interface can address up to 256 byte registers.

Figure 9. Serial interface data format (write ex)

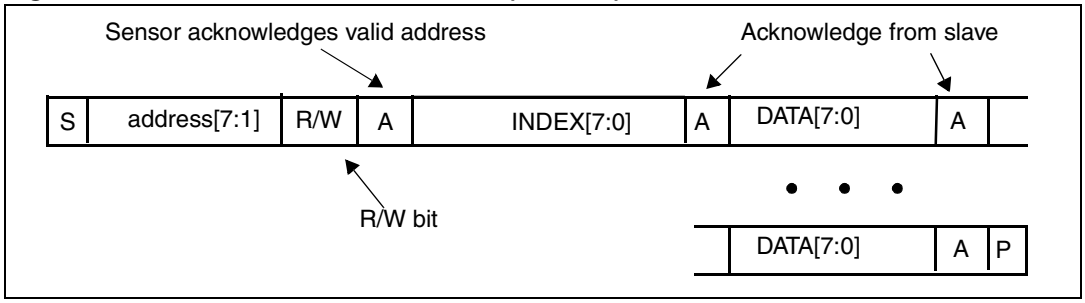

6.2.2 Message interpretation

All serial interface communications with the sensor must begin with a *start* condition. If the *start* condition is followed by a valid address byte then further communications can take place. The sensor will acknowledge the receipt of a valid address by driving the *sda* wire low. The state of the *read/~write* bit (LSB of the address byte) is stored and the next byte of data, sampled from *sda,* can be interpreted.

During a write sequence the second byte sent is an address index and is used to point to one of the internal registers. The receiver will automatically increment the index address by one location after each slave acknowledge. The master can therefore send data bytes continuously to the slave until the slave fails to provide an acknowledge or the master terminates the write communication with a *stop* condition or sends a *repeated start*, *(Sr)*.

As data is received by the slave it is written bit by bit to a serial/parallel register. After each data byte has been received by the slave, an acknowledge is generated, the data is then stored in the internal register addressed by the current index.

During a read message, the next byte read from the slave device are the contents of the register addressed by the current index. The contents of this register are then parallel loaded into the serial/parallel register and clocked out of the device by *scl.*

At the end of each byte, in both read and write message sequences, an acknowledge is issued by the receiving device. A positive acknowledge involves holding the SDA line LOW, a negative acknowledge involves releasing the SDA line to be pulled HIGH. Although the VT5366 is always considered to be a slave device, it acts as a transmitter when the bus master requests a read from the sensor.

A message can only be terminated by the bus master, either by issuing a stop condition, a repeated start condition or by a negative acknowledge after reading a complete byte during a read operation.

6.3 Types of messages

This section gives guidelines on the basic operations to read data from and write data to the serial interface.

The serial interface supports variable length messages. A message may contain no data bytes, one data byte or many data bytes. This data can be written to or read from common or different locations within the sensor. The range of instructions available are detailed below.

- A write message with no data byte is used to set the index for a subsequent read message.
- Multiple location writes may be used for faster information transfers.

Examples of these operations are given below. A full description of the internal registers is given in the previous section. For all examples, the slave address used is 32_{10} for writing and 33_{10} for reading. The write address includes the read/write bit (the LSB) set to zero while this bit is set in the read address.

6.3.1 Single location, single data write

When a random value is written to the sensor, the message looks as shown in *Figure 10*.

Figure 10. Single location, single write

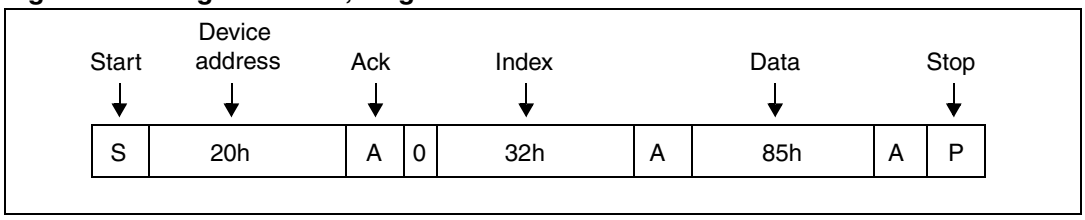

In this example, the *fineH* exposure register (index = 32_{10}) is set to 85_{10}. The r/w bit is set to zero for writing and the *Inc.* bit (MSB of the index byte) is set to zero to disable automatic increment of the index after writing the value. The address index is preserved and may be used by a subsequent read. The write message is terminated with a stop condition from the master.

6.3.2 Multiple location write

It is possible to write data bytes to consecutive adjacent internal registers without having to send explicit indexes prior to sending each data byte. **An auto-increment write is assumed if no stop condition occurs**.

Figure 11. Multiple location write

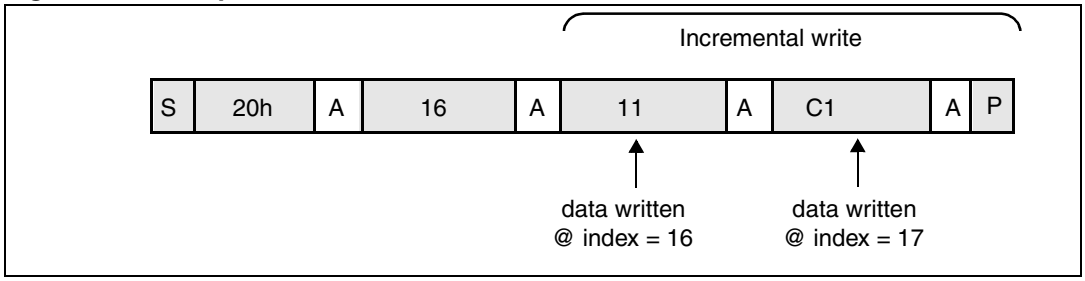

6.3.3 No data write followed by same location read

When a location is to be read, but the value of the stored index is not known, a write message with no data byte must be written first, specifying the index. The read message then completes the message sequence. To avoid relinquishing the serial to bus to another master a repeated start condition is asserted between the write and read messages. In this example, the *gain* value (index = 36) is read as 15.

Figure 12. No data write followed by same location read

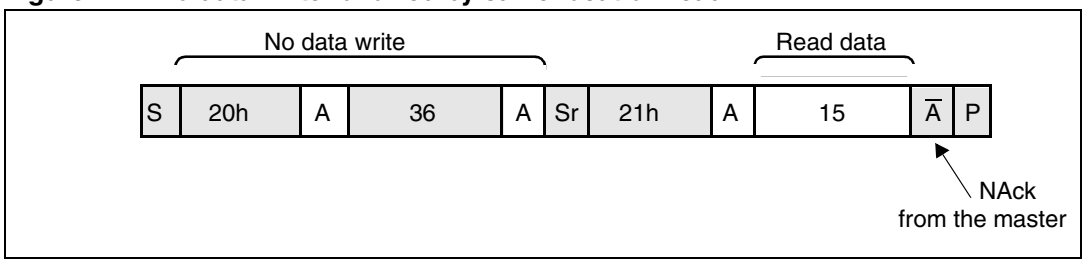

Note that the read message must be terminated with a *negative* acknowledge ($\overline{A}$) from the master. A positive acknowledge at this point would indicate that a multiple read was required and the slave would put the first bit of the next byte onto the SDA line. If this was a 0 then the SDA would be held low and the master would not be able to issue a STOP.

6.3.4 Multiple data read

Figure 13. Multiple data read

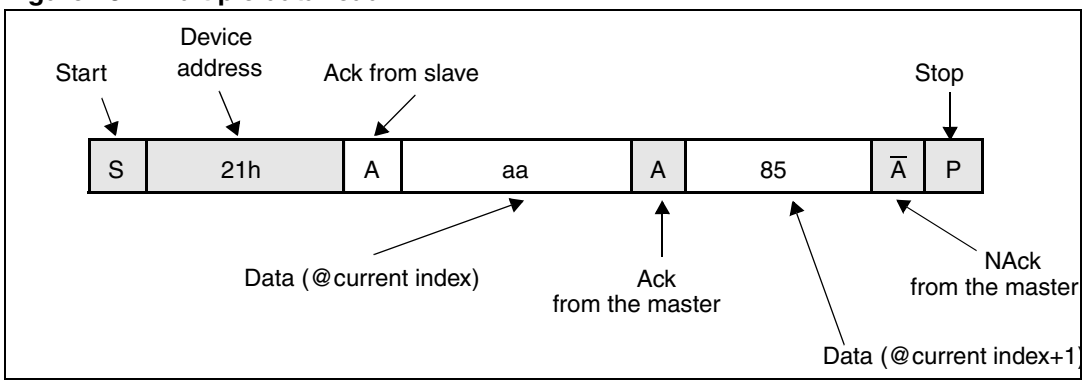

This example assumes that a write message has already taken place. Note that the read message is terminated with a negative acknowledge ($\overline{A}$) from the master: it is not guaranteed that the master will be able to issue a stop condition at any other time during a read message. This is because if the data sent by the slave is all zeros, the *sda* line cannot rise, which is part of the stop condition.

7 Optics assembly

The optics assembly is shown in *Figure 14* and *Figure 15*.

Figure 14. MaxEmil optics

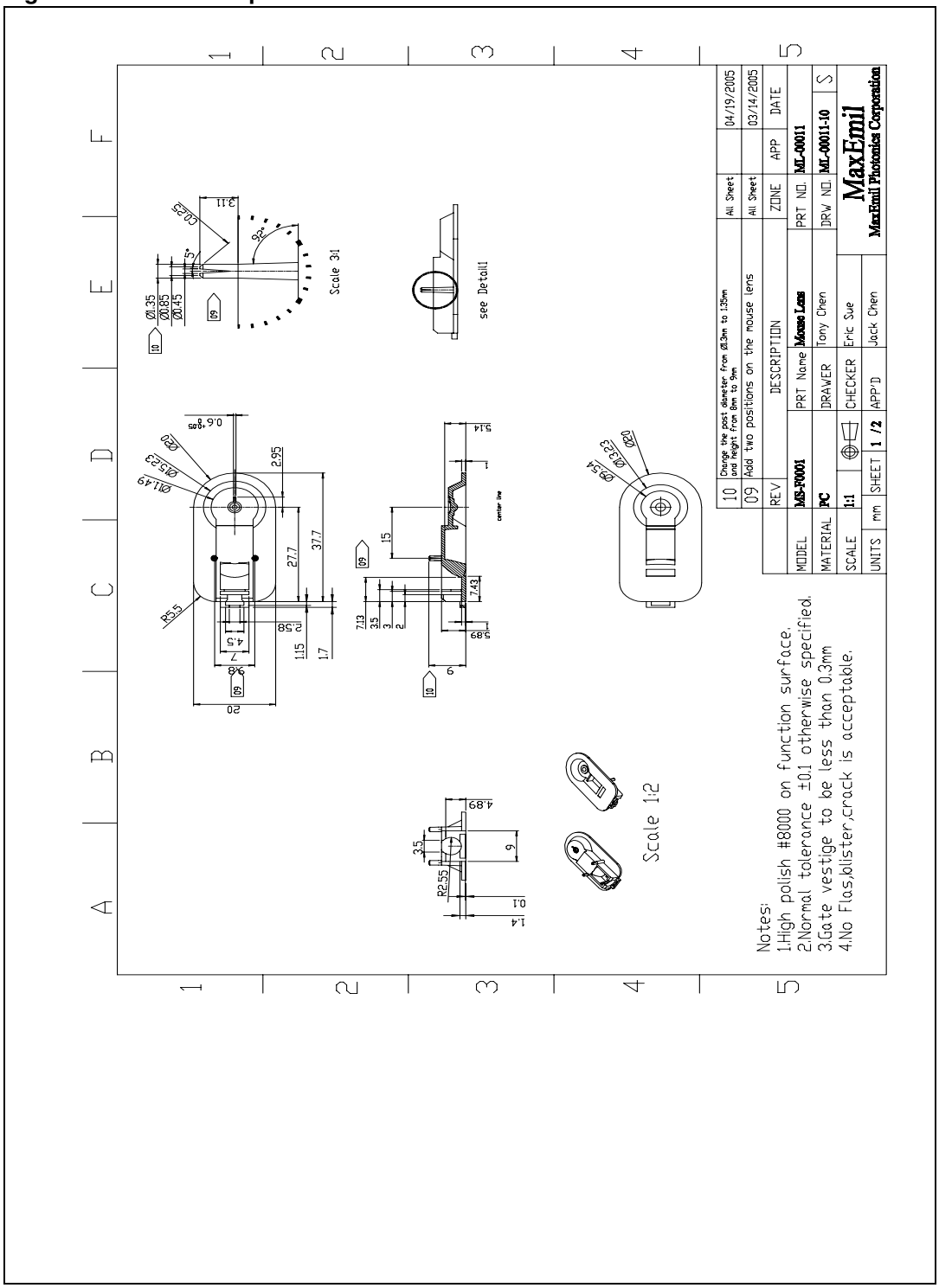

Figure 15. 2D assembly drawing of the VT5366 (exploded view)

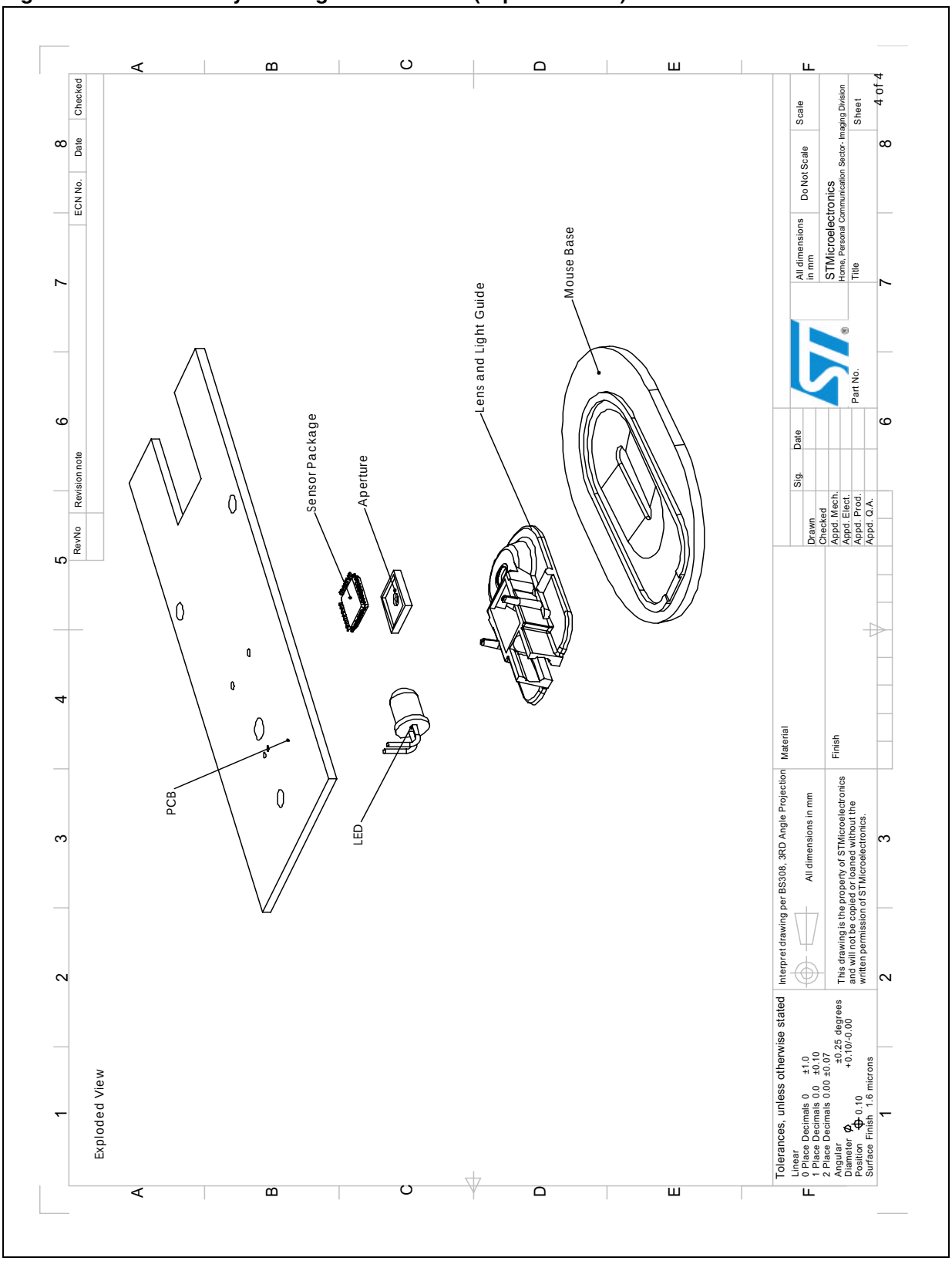

7.1 Mouse assembly guidelines

1. Attach the sensor and all other electrical components onto the PCB with the exception of the navigation LED.
2. Form the LED leads and insert the LED into the optical assembly.
3. Fit the optics/aperture to the PCB using the guideposts. Take care to keep contamination off the sensor surface. The sensor aperture should self-align to the VT5366V032 package.
4. Feed the navigation LED leads through their openings and solder the navigation LED leads and trim.
5. Fit the base plate.
6. Fit mouse top case and feet.

Note: For more details on the Optics (including Manufacturer details) please refer to the STV-366-R0X User Manuals

8 LED selection

8.1 Overview

There are a number of LEDs from a range of suppliers which will work well with the VT5366. It is the responsibility of the customer to ensure that the chosen LED works in their specific implementation. There are various price/performance trade-offs which may be made if the customer chooses to do so.

8.2 Key LED parameters

The VT5366 system requires a bright visible RED LED in a standard 5 mm (T1 3/4) package. The ideal viewing angle is 20° and the intensity should be at least 900mcd at a forward current of 20mA. The key LED parameters are listed in *Table 19*.

Table 19. Key LED parameters

Parameter	Recommended value	Notes
Diameter	5 mm	Important for fit with lens
Length	8.6 mm	Important for fit with lens
Material	AlInGaP	For long-term reliability
Luminous intensity (@20mA)	900 mcd	Minimum value
Viewing angle	20 ^{o}	Half intensity
Mechanical accuracy	+/- 2 ^{o}	Accuracy of the die positioning within the LED body
Color	Red	
Wavelength	640 nm +/- 50 nm	
Relative Illumination at sensor plane for a circle of 1.1 mm diameter	$\geq$ 80%	Illumination value required for Red/IR Led and VCSEL

8.3 VCSEL & IR Illumination

The 366 sensor will operate over a wide range of illuminant wavelengths. For devices operating at approx 850nm (IR LED or VCSEL), the on-die automatic exposure controller (AEC) will compensate for the change in sensitivity compared to 640nm (red LED). Navigation performance may be improved by increasing the illuminated device drive.

9 Electrical characteristics

9.1 Typical operating conditions

Table 20. Operating conditions

Symbol	Parameter	Min.	Typ.	Max.	Unit
Vin	Supply voltage	1.7	1.8	1.9	V
	Supply current (active)		9	12	mA
	Supply current (Power Down Mode)		10	15	µA

9.2 Logic IO

Table 21. Digital IO electrical characteristics

Symbol	Parameter description	Min.	Typ.	Max.	Unit
CMOS digital inputs					
V_{IL}	Low level input voltage	0V		0.3VDD	V
V_{IH}	High level input voltage	0.7VDD		5.5V	V
I_{IL}	Low level input current			-1	µA
I_{IH}	High level input current			1	µA
CMOS digital outputs					
V_{OL}	Low level output voltage (4mA load)			0.3VDD	V
V_{OH}	High level output voltage (4mA load)	0.7VDD			V

Note: All digital inputs/outputs are 1.8V capable, 5V tolerant.

10 Package mechanical data

Figure 16. LQFP32 Clear resin body 7.0 x 7.0 x 1.40 foot print 1.0

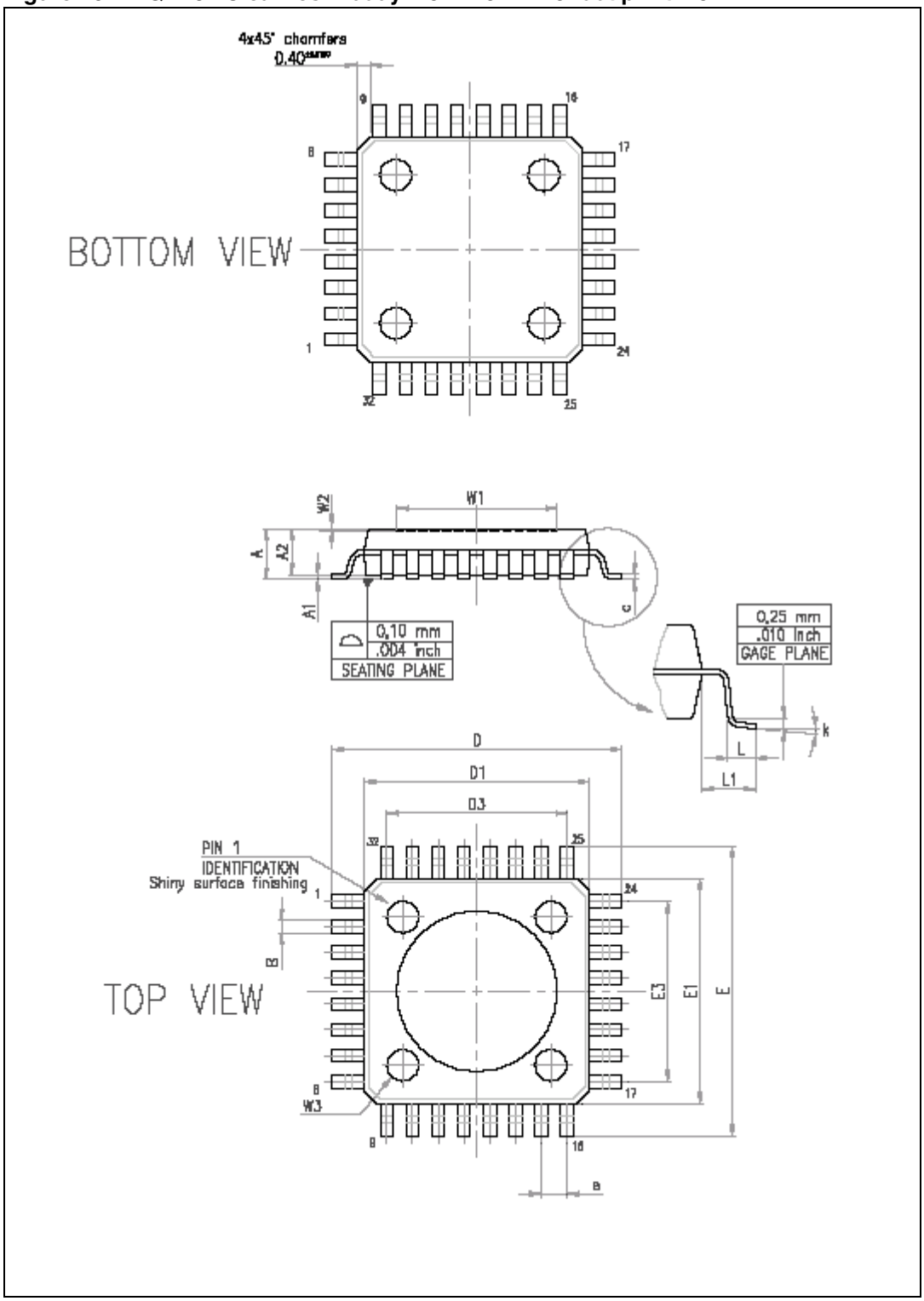

Table 22. LQFP dimensions (mm)

Reference	Min. (mm)	Typ. (mm)	Max. (mm)
A			1.600
A1	0.050		0.15
A2	1.350	1.400	1.450
B	0.300	0.370	0.450
c	0.090		0.200
D		9.00	
D1		7.000	
D3		5.600	
e		0.800	
E		9.000	
E1		7.000	
E3		5.600	
L	0.450	0.600	0.750
L1		1.000	
k	0d	3.5d	7d
W1		5.000	
W2		0.065	

Note: 1 Surface finish W1 is 0.07 Ra.

2 Ejectors are on 5.2 mm square for both top and bottom package.

3 On top package, only the identification for pin one is not an engraved ejector.

10.1 LOQFP package guidelines

The IC can be exposed a maximum of 2 times to an IR/Convection reflow solder process having a temperature profile peak of no higher than 240 °C.

The package/chip are lead free and is ROHS compliant.

For full handling guidelines please contact ST (doc no. 7310623).

11 Ordering information

Table 23. Order codes

Part Number	Description
VT5366V032	Optical mouse sensor
STV-366-R01	27MHz wireless 3 button reference design mouse with scroll wheel & receiver
STV-366-R02	Wireless development board
STV-366-R04	2.4GHz wireless 3 button reference design mouse with scroll wheel & receiver
STV-366-R05	USB Full speed wired 3 button reference design mouse with scroll wheel

12 Revision history

Table 24. Document revision history

Date	Revision	Changes
19-Dec-2006	1	Initial release.

Please Read Carefully:

Information in this document is provided solely in connection with ST products. STMicroelectronics NV and its subsidiaries (“ST”) reserve the right to make changes, corrections, modifications or improvements, to this document, and the products and services described herein at any time, without notice.

All ST products are sold pursuant to ST’s terms and conditions of sale.

Purchasers are solely responsible for the choice, selection and use of the ST products and services described herein, and ST assumes no liability whatsoever relating to the choice, selection or use of the ST products and services described herein.

No license, express or implied, by estoppel or otherwise, to any intellectual property rights is granted under this document. If any part of this document refers to any third party products or services it shall not be deemed a license grant by ST for the use of such third party products or services, or any intellectual property contained therein or considered as a warranty covering the use in any manner whatsoever of such third party products or services or any intellectual property contained therein.

UNLESS OTHERWISE SET FORTH IN ST’S TERMS AND CONDITIONS OF SALE ST DISCLAIMS ANY EXPRESS OR IMPLIED WARRANTY WITH RESPECT TO THE USE AND/OR SALE OF ST PRODUCTS INCLUDING WITHOUT LIMITATION IMPLIED WARRANTIES OF MERCHANTABILITY, FITNESS FOR A PARTICULAR PURPOSE (AND THEIR EQUIVALENTS UNDER THE LAWS OF ANY JURISDICTION), OR INFRINGEMENT OF ANY PATENT, COPYRIGHT OR OTHER INTELLECTUAL PROPERTY RIGHT.

UNLESS EXPRESSLY APPROVED IN WRITING BY AN AUTHORIZED ST REPRESENTATIVE, ST PRODUCTS ARE NOT RECOMMENDED, AUTHORIZED OR WARRANTED FOR USE IN MILITARY, AIR CRAFT, SPACE, LIFE SAVING, OR LIFE SUSTAINING APPLICATIONS, NOR IN PRODUCTS OR SYSTEMS WHERE FAILURE OR MALFUNCTION MAY RESULT IN PERSONAL INJURY, DEATH, OR SEVERE PROPERTY OR ENVIRONMENTAL DAMAGE. ST PRODUCTS WHICH ARE NOT SPECIFIED AS "AUTOMOTIVE GRADE" MAY ONLY BE USED IN AUTOMOTIVE APPLICATIONS AT USER’S OWN RISK.

Resale of ST products with provisions different from the statements and/or technical features set forth in this document shall immediately void any warranty granted by ST for the ST product or service described herein and shall not create or extend in any manner whatsoever, any liability of ST.

ST and the ST logo are trademarks or registered trademarks of ST in various countries.

Information in this document supersedes and replaces all information previously supplied.

The ST logo is a registered trademark of STMicroelectronics. All other names are the property of their respective owners.

© 2006 STMicroelectronics - All rights reserved

STMicroelectronics group of companies

Australia - Belgium - Brazil - Canada - China - Czech Republic - Finland - France - Germany - Hong Kong - India - Israel - Italy - Japan - Malaysia - Malta - Morocco - Singapore - Spain - Sweden - Switzerland - United Kingdom - United States of America

www.st.com