VSC8574-01 Datasheet
Quad-Port 10/100/1000BASE-T PHY with Synchronous Ethernet, IEEE 1588, and QSGMII/SGMII MAC



Microsemi Headquarters
One Enterprise, Aliso Viejo,
CA 92656 USA
Within the USA: +1 (800) 713-4113
Outside the USA: +1 (949) 380-6100
Sales: +1 (949) 380-6136
Fax: +1 (949) 215-4996
Email: sales.support@microsemi.com
www.microsemi.com

©2018 Microsemi, a wholly owned subsidiary of Microchip Technology Inc. All rights reserved. Microsemi and the Microsemi logo are registered trademarks of Microsemi Corporation. All other trademarks and service marks are the property of their respective owners.

Microsemi makes no warranty, representation, or guarantee regarding the information contained herein or the suitability of its products and services for any particular purpose, nor does Microsemi assume any liability whatsoever arising out of the application or use of any product or circuit. The products sold hereunder and any other products sold by Microsemi have been subject to limited testing and should not be used in conjunction with mission-critical equipment or applications. Any performance specifications are believed to be reliable but are not verified, and Buyer must conduct and complete all performance and other testing of the products, alone and together with, or installed in, any end-products. Buyer shall not rely on any data and performance specifications or parameters provided by Microsemi. It is the Buyer's responsibility to independently determine suitability of any products and to test and verify the same. The information provided by Microsemi hereunder is provided "as is, where is" and with all faults, and the entire risk associated with such information is entirely with the Buyer. Microsemi does not grant, explicitly or implicitly, to any party any patent rights, licenses, or any other IP rights, whether with regard to such information itself or anything described by such information. Information provided in this document is proprietary to Microsemi, and Microsemi reserves the right to make any changes to the information in this document or to any products and services at any time without notice.

About Microsemi

Microsemi, a wholly owned subsidiary of Microchip Technology Inc. (Nasdaq: MCHP), offers a comprehensive portfolio of semiconductor and system solutions for aerospace & defense, communications, data center and industrial markets. Products include high-performance and radiation-hardened analog mixed-signal integrated circuits, FPGAs, SoCs and ASICs; power management products; timing and synchronization devices and precise time solutions, setting the world's standard for time; voice processing devices; RF solutions; discrete components; enterprise storage and communication solutions, security technologies and scalable anti-tamper products; Ethernet solutions; Power-over-Ethernet ICs and midspans; as well as custom design capabilities and services. Learn more at www.microsemi.com.

Contents

1 Revision History . . . 1
1.1 Revision 4.3 . . . 1
1.2 Revision 4.2 . . . 1
1.3 Revision 4.1 . . . 1
1.4 Revision 4.0 . . . 1
1.5 Revision 2.1 . . . 2
1.6 Revision 2.0 . . . 2

2 Product Overview . . . 3
2.1 Key Features . . . 4
2.1.1 Low Power . . . 4
2.1.2 Advanced Carrier Ethernet Support . . . 4
2.1.3 Wide Range of Support . . . 4
2.1.4 Flexibility . . . 4
2.2 Block Diagram . . . 5

3 Functional Descriptions . . . 6
3.1 Operating Modes . . . 6
3.1.1 QSGMII/SGMII MAC-to-1000BASE-X Link Partner . . . 6
3.1.2 QSGMII/SGMII MAC-to-100BASE-FX Link Partner . . . 8
3.1.3 QSGMII/SGMII MAC-to-AMS and 1000BASE-X Media SerDes . . . 8
3.1.4 QSGMII/SGMII MAC-to-AMS and 100BASE-FX Media SerDes . . . 9
3.1.5 QSGMII/SGMII MAC-to-AMS and Protocol Transfer Mode . . . 10
3.1.6 QSGMII/SGMII MAC-to-Cat5 Link Partner . . . 11
3.1.7 QSGMII/SGMII MAC-to-Protocol Transfer Mode . . . 12
3.1.8 1000BASE-X MAC-to-Cat5 Link Partner . . . 13
3.2 SerDes MAC Interface . . . 13
3.2.1 SerDes MAC . . . 13
3.2.2 SGMII MAC . . . 14
3.2.3 QSGMII MAC . . . 14
3.3 SerDes Media Interface . . . 15
3.3.1 QSGMII/SGMII to 1000BASE-X . . . 15
3.3.2 QSGMII/SGMII to 100BASE-FX . . . 15
3.3.3 QSGMII to SGMII Protocol Conversion . . . 16
3.3.4 Unidirectional Transport for Fiber Media . . . 16
3.4 PHY Addressing and Port Mapping . . . 16
3.4.1 PHY Addressing . . . 16
3.4.2 SerDes Port Mapping . . . 16
3.5 Cat5 Twisted Pair Media Interface . . . 16
3.5.1 Voltage Mode Line Driver . . . 17
3.5.2 Cat5 Autonegotiation and Parallel Detection . . . 17
3.5.3 Automatic Crossover and Polarity Detection . . . 17
3.5.4 Manual HP Auto-MDIX Setting . . . 18
3.5.5 Link Speed Downshift . . . 18
3.5.6 Energy Efficient Ethernet . . . 18
3.5.7 Ring Resiliency . . . 19
3.6 Automatic Media Sense Interface Mode . . . 19
3.7 Reference Clock . . . 20
3.7.1 Configuring the Reference Clock . . . 20
3.7.2 Single-Ended REFCLK Input . . . 20
3.7.3 Differential REFCLK Input . . . 21

3.8 1588 Reference Clock . . . 21
3.9 Ethernet Inline Powered Devices . . . 21
3.10 IEEE 802.3af PoE Support . . . 23
3.11 ActiPHY Power Management . . . 23
3.11.1 Low Power State . . . 24
3.11.2 Link Partner Wake-Up State . . . 24
3.11.3 Normal Operating State . . . 24
3.12 IEEE 1588 Timestamping Engine . . . 24
3.12.1 IEEE 1588 Block Operation . . . 24
3.12.2 Supporting IEEE 1588 Timestamping Applications . . . 29
3.12.3 Application 1: IEEE 1588 One-Step E2E TC in Systems . . . 29
3.12.4 Application 2: IEEE 1588 TC and BC in Systems . . . 29
3.12.5 Application 3: Enhancing IEEE 1588 Accuracy for CE Switches and MACs . . . 30
3.12.6 Supporting One-Step Peer-to-Peer Transparent Clock . . . 30
3.12.7 Supporting One-Step Boundary Clock/Ordinary Clock . . . 34
3.12.8 Supporting Two- Step Boundary/Ordinary Clock . . . 36
3.12.9 Supporting Two-Step Transparent Clock . . . 37
3.12.10 Calculating Y.1731 OAM Delay Measurements . . . 38
3.12.11 One-Way Delay Measurements . . . 38
3.12.12 Two-Way Delay Measurements . . . 40
3.12.13 IEEE 1588 Device Synchronization . . . 42
3.12.14 Timestamp Update . . . 42
3.12.15 Analyzer . . . 46
3.12.16 Timestamp Processor . . . 64
3.12.17 Timestamp FIFO . . . 65
3.12.18 Serial Timestamp Output Interface . . . 66
3.12.19 Rewriter . . . 67
3.12.20 Local Time Counter . . . 69
3.12.21 Accuracy and Resolution . . . 71
3.12.22 Accessing 1588 IP Registers . . . 71
3.12.23 1588_PPS_0/1 Mux Control . . . 72
3.12.24 1588_DIFF_INPUT_CLK Configuration . . . 72
3.13 Media Recovered Clock Outputs . . . 72
3.13.1 Clock Selection Settings . . . 73
3.13.2 Clock Output Squelch . . . 73
3.14 Serial Management Interface . . . 73
3.14.1 SMI Frames . . . 74
3.14.2 SMI Interrupt . . . 74
3.15 LED Interface . . . 75
3.15.1 LED Modes . . . 76
3.15.2 Extended LED Modes . . . 77
3.15.3 LED Behavior . . . 77
3.15.4 Basic Serial LED Mode . . . 78
3.15.5 Enhanced Serial LED Mode . . . 79
3.15.6 LED Port Swapping . . . 79
3.16 Fast Link Failure Indication . . . 79
3.17 Integrated Two-Wire Serial Multiplexer . . . 79
3.17.1 Read/Write Access Using the Two-Wire Serial MUX . . . 80
3.18 GPIO Pins . . . 81
3.19 Testing Features . . . 81
3.19.1 Ethernet Packet Generator . . . 81
3.19.2 CRC Counters . . . 82
3.19.3 Far-End Loopback . . . 82
3.19.4 Near-End Loopback . . . 83
3.19.5 Connector Loopback . . . 83
3.19.6 SerDes Loopbacks . . . 83
3.19.7 VeriPHY Cable Diagnostics . . . 87

3.19.8 JTAG Boundary Scan . . . 87
3.19.9 JTAG Instruction Codes . . . 88
3.19.10 Boundary Scan Register Cell Order . . . 90
3.20 100BASE-FX Halt Code Transmission and Reception . . . 90
3.21 Configuration . . . 91
3.21.1 Initialization . . . 92

4 Registers . . . 93
4.1 Register and Bit Conventions . . . 93
4.2 IEEE 802.3 and Main Registers . . . 94
4.2.1 Mode Control . . . 95
4.2.2 Mode Status . . . 96
4.2.3 Device Identification . . . 97
4.2.4 Autonegotiation Advertisement . . . 98
4.2.5 Link Partner Autonegotiation Capability . . . 98
4.2.6 Autonegotiation Expansion . . . 99
4.2.7 Transmit Autonegotiation Next Page . . . 99
4.2.8 Autonegotiation Link Partner Next Page Receive . . . 99
4.2.9 1000BASE-T Control . . . 100
4.2.10 1000BASE-T Status . . . 100
4.2.11 MMD Access Control Register . . . 101
4.2.12 MMD Address or Data Register . . . 101
4.2.13 1000BASE-T Status Extension 1 . . . 101
4.2.14 100BASE-TX/FX Status Extension . . . 102
4.2.15 1000BASE-T Status Extension 2 . . . 102
4.2.16 Bypass Control . . . 103
4.2.17 Error Counter 1 . . . 104
4.2.18 Error Counter 2 . . . 104
4.2.19 Error Counter 3 . . . 104
4.2.20 Extended Control and Status . . . 104
4.2.21 Extended PHY Control Set 1 . . . 105
4.2.22 Extended PHY Control Set 2 . . . 106
4.2.23 Interrupt Mask . . . 107
4.2.24 Interrupt Status . . . 108
4.2.25 Device Auxiliary Control and Status . . . 108
4.2.26 LED Mode Select . . . 109
4.2.27 LED Behavior . . . 110
4.2.28 Extended Page Access . . . 111
4.3 Extended Page 1 Registers . . . 111
4.3.1 SerDes Media Control . . . 112
4.3.2 Cu Media CRC Good Counter . . . 112
4.3.3 Extended Mode Control . . . 113
4.3.4 ActiPHY Control . . . 113
4.3.5 PoE and Miscellaneous Functionality . . . 115
4.3.6 Ethernet Packet Generator Control 1 . . . 115
4.3.7 Ethernet Packet Generator Control 2 . . . 116
4.4 Extended Page 2 Registers . . . 116
4.4.1 Cu PMD Transmit Control . . . 116
4.4.2 EEE Control . . . 118
4.4.3 Ring Resiliency Control . . . 119
4.5 Extended Page 3 Registers . . . 120
4.5.1 MAC SerDes PCS Control . . . 120
4.5.2 MAC SerDes PCS Status . . . 121
4.5.3 MAC SerDes Clause 37 Advertised Ability . . . 122
4.5.4 MAC SerDes Clause 37 Link Partner Ability . . . 122
4.5.5 MAC SerDes Status . . . 122
4.5.6 Media SerDes Transmit Good Packet Counter . . . 123

4.5.7 Media SerDes Transmit CRC Error Counter . . . 123
4.5.8 Media SerDes PCS Control . . . 123
4.5.9 Media SerDes PCS Status . . . 124
4.5.10 Media SerDes Clause 37 Advertised Ability . . . 124
4.5.11 Media SerDes Clause 37 Link Partner Ability . . . 124
4.5.12 Media SerDes Status . . . 125
4.5.13 Fiber Media CRC Good Counter . . . 125
4.5.14 Fiber Media CRC Error Counter . . . 125
4.6 General Purpose Registers . . . 125
4.6.1 Reserved General Purpose Address Space . . . 126
4.6.2 SIGDET/GPIO Control . . . 126
4.6.3 GPIO Control 2 . . . 127
4.6.4 GPIO Input . . . 128
4.6.5 GPIO Output . . . 129
4.6.6 GPIO Pin Configuration . . . 129
4.6.7 Microprocessor Command . . . 130
4.6.8 MAC Configuration and Fast Link . . . 131
4.6.9 Two-Wire Serial MUX Control 1 . . . 131
4.6.10 Two-Wire Serial MUX Control 2 . . . 132
4.6.11 Two-Wire Serial MUX Data Read/Write . . . 132
4.6.12 Recovered Clock 1 Control . . . 132
4.6.13 Recovered Clock 2 Control . . . 133
4.6.14 Enhanced LED Control . . . 134
4.6.15 Global Interrupt Status . . . 135
4.7 Clause 45 Registers to Support Energy Efficient Ethernet and 802.3bf . . . 136
4.7.1 PCS Status 1 . . . 137
4.7.2 EEE Capability . . . 137
4.7.3 EEE Wake Error Counter . . . 137
4.7.4 EEE Advertisement . . . 138
4.7.5 EEE Link Partner Advertisement . . . 138
4.8 1588 IP Registers . . . 140
4.8.1 IP_1588:IP_1588_TOP_CFG_STAT . . . 141
4.8.2 IP_1588:IP_1588_LTC . . . 142
4.8.3 IP_1588:TS_FIFO_SI . . . 147
4.8.4 IP_1588:INGR_PREDICTOR . . . 148
4.8.5 IP_1588:EGR_PREDICTOR . . . 150
4.8.6 IP_1588:MISC_CFG . . . 153
4.8.7 IP_1588:INGR_IP_1588_CFG_STAT . . . 153
4.8.8 IP_1588:INGR_IP_1588_TSP . . . 156
4.8.9 IP_1588:INGR_IP_1588_DF . . . 158
4.8.10 IP_1588:INGR_IP_1588_TSFIFO . . . 159
4.8.11 IP_1588:INGR_IP_1588_RW . . . 163
4.8.12 IP_1588:EGR_IP_1588_CFG_STAT . . . 164
4.8.13 IP_1588:EGR_IP_1588_TSP . . . 167
4.8.14 IP_1588:EGR_IP_1588_DF . . . 169
4.8.15 IP_1588:EGR_IP_1588_TSFIFO . . . 169
4.8.16 IP_1588:EGR_IP_1588_RW . . . 174
4.9 Egress0 Ethernet Comparator . . . 175
4.9.1 ETHERNET_COMPARATOR:EGR0_ETH1_NXT_PROTOCOL . . . 176
4.9.2 ETHERNET_COMPARATOR:EGR0_ETH1_FLOW_CFG . . . 178
4.9.3 ETHERNET_COMPARATOR:EGR0_ETH2_NXT_PROTOCOL . . . 181
4.9.4 ETHERNET_COMPARATOR:EGR0_ETH2_FLOW_CFG . . . 183
4.9.5 ETHERNET_COMPARATOR:EGR0_MPLS_NXT_COMPARATOR . . . 186
4.9.6 ETHERNET_COMPARATOR:EGR0_MPLS_FLOW_CFG . . . 187
4.9.7 ETHERNET_COMPARATOR:EGR0_IP1_NXT_PROTOCOL . . . 190
4.9.8 ETHERNET_COMPARATOR:EGR0_IP1_FLOW_CFG . . . 194
4.9.9 ETHERNET_COMPARATOR:EGR0_IP2_NXT_PROTOCOL . . . 197
4.9.10 ETHERNET_COMPARATOR:EGR0_IP2_FLOW_CFG . . . 201

4.9.11 ETHERNET_COMPARATOR:EGR0_PTP_FLOW . . . 204
4.9.12 ETHERNET_COMPARATOR:EGR0_PTP_IP_CHKSUM_CTL . . . 208
4.9.13 ETHERNET_COMPARATOR:EGR0_FRAME_SIG_CFG . . . 209
4.10 Ingress0 Ethernet Comparator . . . 211
4.10.1 ETHERNET_COMPARATOR:INGR0_ETH1_NXT_PROTOCOL . . . 212
4.10.2 ETHERNET_COMPARATOR:INGR0_ETH1_FLOW_CFG . . . 214
4.10.3 ETHERNET_COMPARATOR:INGR0_ETH2_NXT_PROTOCOL . . . 217
4.10.4 ETHERNET_COMPARATOR:INGR0_ETH2_FLOW_CFG . . . 219
4.10.5 ETHERNET_COMPARATOR:INGR0_MPLS_NXT_COMPARATOR . . . 222
4.10.6 ETHERNET_COMPARATOR:INGR0_MPLS_FLOW_CFG . . . 223
4.10.7 ETHERNET_COMPARATOR:INGR0_IP1_NXT_PROTOCOL . . . 226
4.10.8 ETHERNET_COMPARATOR:INGR0_IP1_FLOW_CFG . . . 230
4.10.9 ETHERNET_COMPARATOR:INGR0_IP2_NXT_PROTOCOL . . . 233
4.10.10 ETHERNET_COMPARATOR:INGR0_IP2_FLOW_CFG . . . 237
4.10.11 ETHERNET_COMPARATOR:INGR0_PTP_FLOW . . . 241
4.10.12 ETHERNET_COMPARATOR:INGR0_PTP_IP_CHKSUM_CTL . . . 245
4.11 Egress1 Ethernet Comparator . . . 245
4.11.1 ETHERNET_COMPARATOR:EGR1_ETH1_NXT_PROTOCOL . . . 246
4.11.2 ETHERNET_COMPARATOR:EGR1_ETH1_FLOW_CFG . . . 248
4.11.3 ETHERNET_COMPARATOR:EGR1_ETH2_NXT_PROTOCOL . . . 251
4.11.4 ETHERNET_COMPARATOR:EGR1_ETH2_FLOW_CFG . . . 253
4.11.5 ETHERNET_COMPARATOR:EGR1_MPLS_NXT_COMPARATOR . . . 256
4.11.6 ETHERNET_COMPARATOR:EGR1_MPLS_FLOW_CFG . . . 257
4.11.7 ETHERNET_COMPARATOR:EGR1_IP1_NXT_PROTOCOL . . . 260
4.11.8 ETHERNET_COMPARATOR:EGR1_IP1_FLOW_CFG . . . 264
4.11.9 ETHERNET_COMPARATOR:EGR1_IP2_NXT_PROTOCOL . . . 267
4.11.10 ETHERNET_COMPARATOR:EGR1_IP2_FLOW_CFG . . . 271
4.11.11 ETHERNET_COMPARATOR:EGR1_PTP_FLOW . . . 274
4.11.12 ETHERNET_COMPARATOR:EGR1_PTP_IP_CHKSUM_CTL . . . 278
4.11.13 ETHERNET_COMPARATOR:EGR1_FRAME_SIG_CFG . . . 279
4.12 Ingress1 Ethernet Comparator . . . 281
4.12.1 ETHERNET_COMPARATOR:INGR1_ETH1_NXT_PROTOCOL . . . 282
4.12.2 ETHERNET_COMPARATOR:INGR1_ETH1_FLOW_CFG . . . 284
4.12.3 ETHERNET_COMPARATOR:INGR1_ETH2_NXT_PROTOCOL . . . 287
4.12.4 ETHERNET_COMPARATOR:INGR1_ETH2_FLOW_CFG . . . 289
4.12.5 ETHERNET_COMPARATOR:INGR1_MPLS_NXT_COMPARATOR . . . 292
4.12.6 ETHERNET_COMPARATOR:INGR1_MPLS_FLOW_CFG . . . 293
4.12.7 ETHERNET_COMPARATOR:INGR1_IP1_NXT_PROTOCOL . . . 296
4.12.8 ETHERNET_COMPARATOR:INGR1_IP1_FLOW_CFG . . . 300
4.12.9 ETHERNET_COMPARATOR:INGR1_IP2_NXT_PROTOCOL . . . 303
4.12.10 ETHERNET_COMPARATOR:INGR1_IP2_FLOW_CFG . . . 307
4.12.11 ETHERNET_COMPARATOR:INGR1_PTP_FLOW . . . 311
4.12.12 ETHERNET_COMPARATOR:INGR1_PTP_IP_CHKSUM_CTL . . . 315
4.13 Egress2 Ethernet Comparator . . . 315
4.13.1 ETHERNET_COMPARATOR:EGR2_ETH1_NXT_PROTOCOL_A . . . 316
4.13.2 ETHERNET_COMPARATOR:EGR2_ETH1_NXT_PROTOCOL_B . . . 318
4.13.3 ETHERNET_COMPARATOR:EGR2_ETH1_FLOW_CFG . . . 319
4.13.4 ETHERNET_COMPARATOR:EGR2_ETH2_NXT_PROTOCOL_A . . . 323
4.13.5 ETHERNET_COMPARATOR:EGR2_ETH2_FLOW_CFG . . . 324
4.13.6 ETHERNET_COMPARATOR:EGR2_MPLS_NXT_COMPARATOR_A . . . 328
4.13.7 ETHERNET_COMPARATOR:EGR2_MPLS_FLOW_CFG . . . 329
4.13.8 ETHERNET_COMPARATOR:EGR2_PTP_FLOW . . . 332
4.14 Ingress2 Ethernet Comparator . . . 336
4.14.1 ETHERNET_COMPARATOR:INGR2_ETH1_NXT_PROTOCOL_A . . . 337
4.14.2 ETHERNET_COMPARATOR:INGR2_ETH1_NXT_PROTOCOL_B . . . 338
4.14.3 ETHERNET_COMPARATOR:INGR2_ETH1_FLOW_CFG . . . 340
4.14.4 ETHERNET_COMPARATOR:INGR2_ETH2_NXT_PROTOCOL_A . . . 344
4.14.5 ETHERNET_COMPARATOR:INGR2_ETH2_FLOW_CFG . . . 345

4.14.6 ETHERNET_COMPARATOR:INGR2_MPLS_NXT_COMPARATOR_A . . . 348
4.14.7 ETHERNET_COMPARATOR:INGR2_MPLS_FLOW_CFG . . . 349
4.14.8 ETHERNET_COMPARATOR:INGR2_PTP_FLOW . . . 353

5 Electrical Specifications . . . 358
5.1 DC Characteristics . . . 358
5.1.1 VDD25 . . . 358
5.1.2 LED and GPIO . . . 358
5.1.3 Internal Pull-Up or Pull-Down Resistors . . . 358
5.1.4 Reference Clock . . . 359
5.1.5 1588 Reference Clock . . . 359
5.1.6 SerDes Interface (SGMII) . . . 359
5.1.7 Enhanced SerDes Interface (QSGMII) . . . 361
5.1.8 Current Consumption . . . 362
5.1.9 Thermal Diode . . . 363
5.2 AC Characteristics . . . 364
5.2.1 Reference Clock . . . 364
5.2.2 Recovered Clock . . . 365
5.2.3 SerDes Outputs . . . 366
5.2.4 SerDes Driver Jitter . . . 366
5.2.5 SerDes Inputs . . . 366
5.2.6 SerDes Receiver Jitter Tolerance . . . 367
5.2.7 Enhanced SerDes Interface . . . 367
5.2.8 Basic Serial LEDs . . . 370
5.2.9 Enhanced Serial LEDs . . . 370
5.2.10 JTAG Interface . . . 371
5.2.11 Serial Management Interface . . . 372
5.2.12 Reset Timing . . . 373
5.2.13 1588 Timing Specifications . . . 373
5.2.14 Serial Timestamp Interface . . . 374
5.2.15 Local Time Counter Load/Save Timing . . . 374
5.3 Operating Conditions . . . 375
5.4 Stress Ratings . . . 375

6 Pin Descriptions . . . 376
6.1 Pin Identifications . . . 376
6.2 Pin Diagram . . . 376
6.3 Pins by Function . . . 378
6.3.1 1588 Support . . . 378
6.3.2 GPIO and 1588 Support . . . 379
6.3.3 GPIO and SIGDET . . . 379
6.3.4 JTAG . . . 379
6.3.5 Miscellaneous . . . 380
6.3.6 Power Supply . . . 381
6.3.7 SGMII/SerDes/QSGMII MAC Interface . . . 382
6.3.8 SerDes Media Interface . . . 382
6.3.9 Serial Management Interface . . . 383
6.3.10 Twisted Pair Interface . . . 383
6.4 Pins by Number . . . 385
6.5 Pins by Name . . . 388

7 Package Information . . . 391
7.1 Package Drawing . . . 391
7.2 Thermal Specifications . . . 392
7.3 Moisture Sensitivity . . . 393

8 Design Considerations 394
8.1 1588 timestamping for all packets 394
8.2 AMS and 100BASE-FX 394
8.3 10BASE-T signal amplitude 394
8.4 SNR degradation and link drops 394
8.5 PBB frame corruption 394
8.6 Clause 45 register 3.22 394
8.7 Clause 45 register 3.1 395
8.8 Clause 45 register address post-increment 395
8.9 Fast link failure indication 395
8.10 Timestamp accuracy in 10BASE-T mode 395
8.11 Near-end loopback with AMS enabled 395
8.12 Carrier detect assertion 395
8.13 Link status not correct in register 24E3.2 for 100BASE-FX operation 395
8.14 Register 28.14 does not reflect autonegotiation disabled in 100BASE-FX mode 395
8.15 Internal clock disabled when media switches from fiber to copper with autonegotiation disabled 396
8.16 Near-end loopback non-functional in protocol transfer mode 396
8.17 Fiber-media recovered clock does not squelch based on link status 396
8.18 1000BASE-X parallel detect mode with Clause 37 autonegotiation enabled 396
8.19 Anomalous PCS error indications in Energy Efficient Ethernet mode 396
8.20 Timestamp errors due to IEEE 1588 Reference Clock interruption 396
8.21 Out-of-sync FIFOs in the 1588 engine 397
8.22 1588 bypass and datapath loopbacks ignore IDLE symbol boundaries 397
8.23 1588 bypass shall be enabled during engine reconfiguration 397
9 Ordering Information 398

Figures

Figure 1 Dual Media Application Diagram . . . 3
Figure 2 Copper Transceiver Application Diagram . . . 3
Figure 3 Fiber Media Transceiver Application Diagram . . . 4
Figure 4 Block Diagram . . . 5
Figure 5 SGMII MAC-to-1000BASE-X Link Partner . . . 7
Figure 6 QSGMII MAC-to-1000BASE-X Link Partner . . . 7
Figure 7 QSGMII/SGMII MAC-to-100BASE-FX Link Partner . . . 8
Figure 8 QSGMII/SGMII MAC-to-AMS and 1000BASE-X Media SerDes . . . 9
Figure 9 QSGMII/SGMII MAC-to-AMS and 100BASE-FX Media SerDes . . . 10
Figure 10 QSGMII/SGMII MAC-to-AMS and Protocol Transfer Mode . . . 11
Figure 11 QSGMII/SGMII MAC-to-Cat5 Link Partner . . . 12
Figure 12 QSGMII/SGMII MAC-to-Protocol Transfer Mode . . . 12
Figure 13 1000BASE-X MAC-to-Cat5 Link Partner . . . 13
Figure 14 SerDes MAC Interface . . . 14
Figure 15 SGMII MAC Interface . . . 14
Figure 16 QSGMII MAC Interface . . . 15
Figure 17 Cat5 Media Interface . . . 17
Figure 18 Low Power Idle Operation . . . 18
Figure 19 Automatic Media Sense Block Diagram . . . 19
Figure 20 2.5 V CMOS Single-Ended REFCLK Input Resistor Network . . . 20
Figure 21 3.3 V CMOS Single-Ended REFCLK Input Resistor Network . . . 21
Figure 22 5 V CMOS Single-Ended REFCLK Input Resistor Network . . . 21
Figure 23 AC Coupling for REFCLK Input . . . 21
Figure 24 Inline Powered Ethernet Switch Diagram . . . 22
Figure 25 ActiPHY State Diagram . . . 23
Figure 26 IEEE 1588 Architecture . . . 25
Figure 27 One-Step E2E TC Mode A . . . 26
Figure 28 One-Step E2E TC Mode B . . . 28
Figure 29 Linecard E2E TC PHY application . . . 29
Figure 30 BC Linecard Application . . . 30
Figure 31 Delay Measurements . . . 31
Figure 32 One-Step P2P TC Standard . . . 33
Figure 33 One-Step E2E BC . . . 35
Figure 34 Two-Step E2E BC . . . 36
Figure 35 Two-Step E2E TC . . . 37
Figure 36 Y.1731 1DM PDU Format . . . 39
Figure 37 Y.1731 One-Way Delay . . . 39
Figure 38 Y.1731 DMM PDU Format . . . 40
Figure 39 Y.1731 Two-Way Delay . . . 41
Figure 40 PTP Packet Encapsulations . . . 43
Figure 41 OAM Packet Encapsulations . . . 44
Figure 42 TSU Block Diagram . . . 45
Figure 43 Analyzer Block Diagram . . . 46
Figure 44 Type II Ethernet Basic Frame Format . . . 48
Figure 45 Ethernet Frame with SNAP . . . 48
Figure 46 Ethernet Frame with VLAN Tag and SNAP . . . 49
Figure 47 Ethernet Frame with VLAN Tags and SNAP . . . 49
Figure 48 PBB Ethernet Frame Format (No B-Tag) . . . 49
Figure 49 PBB Ethernet Frame Format (1 B-Tag) . . . 49
Figure 50 MPLS Label Format . . . 52
Figure 51 MPLS Label Stack within an Ethernet Frame . . . 52
Figure 52 MPLS Labels and Control Word . . . 52
Figure 53 IPv4 with UDP . . . 54
Figure 54 IPv6 with UDP . . . 55

Figure 55 ACH Header Format . . . 55
Figure 56 ACH Header with Protocol ID Field . . . 55
Figure 57 IPSec Header Format . . . 56
Figure 58 IPv6 with UDP and IPSec . . . 56
Figure 59 PTP Frame Layout . . . 59
Figure 60 OAM 1DM Frame Header Format . . . 59
Figure 61 OAM DMM Frame Header Format . . . 60
Figure 62 OAM DMR Frame Header Format . . . 60
Figure 63 Serial Time Stamp/Frame Signature Output . . . 67
Figure 64 Preamble Reduction in Rewriter . . . 69
Figure 65 Local Time Counter Load/Save Timing . . . 70
Figure 66 SMI Read Frame . . . 74
Figure 67 SMI Write Frame . . . 74
Figure 68 MDINT Configured as an Open-Drain (Active-Low) Pin . . . 75
Figure 69 MDINT Configured as an Open-Source (Active-High) Pin . . . 75
Figure 70 Two-Wire Serial MUX with SFP Control and Status . . . 80
Figure 71 Two-Wire Serial MUX Read and Write Register Flow . . . 80
Figure 72 Far-End Loopback Diagram . . . 83
Figure 73 Near-End Loopback Diagram . . . 83
Figure 74 Connector Loopback Diagram . . . 83
Figure 75 Data Loops of the SerDes Macro . . . 84
Figure 76 Test Access Port and Boundary Scan Architecture . . . 88
Figure 77 Register Space Diagram . . . 93
Figure 78 SGMII DC Transmit Test Circuit . . . 360
Figure 79 SGMII DC Definitions . . . 360
Figure 80 SGMII DC Driver Output Impedance Test Circuit . . . 361
Figure 81 SGMII DC Input Definitions . . . 361
Figure 82 Test Circuit for Recovered Clock Output Signals . . . 365
Figure 83 QSGMII Transient Parameters . . . 367
Figure 84 Basic Serial LED Timing . . . 370
Figure 85 Enhanced Serial LED Timing . . . 370
Figure 86 JTAG Interface Timing Diagram . . . 371
Figure 87 Test Circuit for TDO Disable Time . . . 372
Figure 88 Serial Management Interface Timing . . . 373
Figure 89 Serial Timestamp Interface Timing Diagram . . . 374
Figure 90 Local Time Counter Load/Save Timing Diagram . . . 374
Figure 91 Pin Diagram, Top Left . . . 377
Figure 92 Pin Diagram, Top Right . . . 378
Figure 93 Package Drawing . . . 392

Tables

Table 1 Operating Modes . . . 6
Table 2 MAC Interface Mode Mapping . . . 16
Table 3 Supported MDI Pair Combinations . . . 18
Table 4 AMS Media Preferences . . . 20
Table 5 REFCLK Frequency Selection . . . 20
Table 6 Flows Per Engine Type . . . 47
Table 7 Ethernet Comparator: Next Protocol . . . 47
Table 8 Comparator ID Codes . . . 48
Table 9 Ethernet Comparator (Next Protocol) . . . 49
Table 10 Ethernet Comparator (Flow) . . . 50
Table 11 MPLS Comparator: Next Word . . . 52
Table 12 Next MPLS Comparator . . . 53
Table 13 MPLS Comparator: Per-Flow . . . 53
Table 14 MPLS Range_Upper/Lower Label Map . . . 53
Table 15 Next-Protocol Registers in OAM-Version of MPLS Block . . . 54
Table 16 Comparator Field Summary . . . 56
Table 17 IP/ACH Next-Protocol Comparison . . . 57
Table 18 IP/ACH Comparator Flow Verification Registers . . . 58
Table 19 PTP Comparison . . . 60
Table 20 PTP Comparison: Common Controls . . . 62
Table 21 PTP Comparison: Additions for OAM-Optimized Engine . . . 62
Table 22 Frame Signature Byte Mapping . . . 63
Table 23 Frame Signature Address Source . . . 63
Table 24 Output Pulse Frequencies . . . 71
Table 25 Register 16 . . . 71
Table 26 1588_PPS_0 Mux Control, Address 21E1588 . . . 72
Table 27 Register 17 . . . 72
Table 28 Register 18 . . . 72
Table 29 LED Drive State . . . 75
Table 30 LED Mode and Function Summary . . . 76
Table 31 Extended LED Mode and Function Summary . . . 77
Table 32 LED Serial Bitstream Order . . . 78
Table 33 Register Bits for GPIO Control and Status . . . 81
Table 34 SerDes Macro Address Map . . . 87
Table 35 JTAG Instruction Codes . . . 88
Table 36 IDCODE JTAG Device Identification Register Descriptions . . . 89
Table 37 USERCODE JTAG Device Identification Register Descriptions . . . 89
Table 38 JTAG Instruction Code IEEE Compliance . . . 89
Table 39 IEEE 802.3 Registers . . . 94
Table 40 Main Registers . . . 94
Table 41 Mode Control, Address 0 (0x00) . . . 95
Table 42 Mode Status, Address 1 (0x01) . . . 96
Table 43 Identifier 1, Address 2 (0x02) . . . 97
Table 44 Identifier 2, Address 3 (0x03) . . . 97
Table 45 Device Autonegotiation Advertisement, Address 4 (0x04) . . . 98
Table 46 Autonegotiation Link Partner Ability, Address 5 (0x05) . . . 98
Table 47 Autonegotiation Expansion, Address 6 (0x06) . . . 99
Table 48 Autonegotiation Next Page Transmit, Address 7 (0x07) . . . 99
Table 49 Autonegotiation LP Next Page Receive, Address 8 (0x08) . . . 99
Table 50 1000BASE-T Control, Address 9 (0x09) . . . 100
Table 51 1000BASE-T Status, Address 10 (0x0A) . . . 100
Table 52 MMD EEE Access, Address 13 (0x0D) . . . 101
Table 53 MMD Address or Data Register, Address 14 (0x0E) . . . 101
Table 54 1000BASE-T Status Extension 1, Address 15 (0x0F) . . . 101

Table 55 100BASE-TX/FX Status Extension, Address 16 (0x10) . . . 102
Table 56 1000BASE-T Status Extension 2, Address 17 (0x11) . . . 102
Table 57 Bypass Control, Address 18 (0x12) . . . 103
Table 58 Extended Control and Status, Address 19 (0x13) . . . 104
Table 59 Extended Control and Status, Address 20 (0x14) . . . 104
Table 60 Extended Control and Status, Address 21 (0x15) . . . 104
Table 61 Extended Control and Status, Address 22 (0x16) . . . 104
Table 62 Extended PHY Control 1, Address 23 (0x17) . . . 105
Table 63 Extended PHY Control 2, Address 24 (0x18) . . . 106
Table 64 Interrupt Mask, Address 25 (0x19) . . . 107
Table 65 Interrupt Status, Address 26 (0x1A) . . . 108
Table 66 Auxiliary Control and Status, Address 28 (0x1C) . . . 108
Table 67 LED Mode Select, Address 29 (0x1D) . . . 109
Table 68 LED Behavior, Address 30 (0x1E) . . . 110
Table 69 Extended/GPIO Register Page Access, Address 31 (0x1F) . . . 111
Table 70 Extended Registers Page 1 Space . . . 111
Table 71 SerDes Media Control, Address 16E1 (0x10) . . . 112
Table 72 Cu Media CRC Good Counter, Address 18E1 (0x12) . . . 112
Table 73 Extended Mode Control, Address 19E1 (0x13) . . . 113
Table 74 Extended PHY Control 3, Address 20E1 (0x14) . . . 113
Table 75 Extended PHY Control 4, Address 23E1 (0x17) . . . 115
Table 76 EPG Control Register 1, Address 29E1 (0x1D) . . . 115
Table 77 EPG Control Register 2, Address 30E1 (0x1E) . . . 116
Table 78 Extended Registers Page 2 Space . . . 116
Table 79 Cu PMD Transmit Control, Address 16E2 (0x10) . . . 117
Table 80 EEE Control, Address 17E2 (0x11) . . . 118
Table 81 Ring Resiliency, Address 30E2 . . . 119
Table 82 Extended Registers Page 3 Space . . . 120
Table 83 MAC SerDes PCS Control, Address 16E3 (0x10) . . . 120
Table 84 MAC SerDes PCS Status, Address 17E3 (0x11) . . . 121
Table 85 MAC SerDes Cl37 Advertised Ability, Address 18E3 (0x12) . . . 122
Table 86 MAC SerDes Cl37 LP Ability, Address 19E3 (0x13) . . . 122
Table 87 MAC SerDes Status, Address 20E3 (0x14) . . . 122
Table 88 Media SerDes Tx Good Packet Counter, Address 21E3 (0x15) . . . 123
Table 89 Media SerDes Tx CRC Error Counter, Address 22E3 (0x16) . . . 123
Table 90 Media SerDes PCS Control, Address 23E3 (0x17) . . . 123
Table 91 Media SerDes PCS Status, Address 24E3 (0x18) . . . 124
Table 92 Media SerDes Cl37 Advertised Ability, Address 25E3 (0x19) . . . 124
Table 93 MAC SerDes Cl37 LP Ability, Address 26E3 (0x1A) . . . 124
Table 94 Media SerDes Status, Address 27E3 (0x1B) . . . 125
Table 95 Fiber Media CRC Good Counter, Address 28E3 (0x1C) . . . 125
Table 96 Fiber Media CRC Error Counter, Address 29E3 (0x1D) . . . 125
Table 97 General Purpose Registers Page Space . . . 126
Table 98 SIGDET/GPIO Control, Address 13G (0x0D) . . . 126
Table 99 GPIO Control 2, Address 14G (0x0E) . . . 127
Table 100 GPIO Input, Address 15G (0x0F) . . . 128
Table 101 GPIO Output, Address 16G (0x10) . . . 129
Table 102 GPIO Input/Output Configuration, Address 17G (0x11) . . . 129
Table 103 Microprocessor Command Register, Address 18G . . . 130
Table 104 MAC Configuration and Fast Link Register, Address 19G (0x13) . . . 131
Table 105 Two-Wire Serial MUX Control 1, Address 20G (0x14) . . . 131
Table 106 Two-Wire Serial MUX Interface Status and Control, Address 21G (0x15) . . . 132
Table 107 Two-Wire Serial MUX Data Read/Write, Address 22G (0x16) . . . 132
Table 108 Recovered Clock 1 Control, Address 23G (0x17) . . . 132
Table 109 Recovered Clock 2 Control, Address 24G (0x18) . . . 133
Table 110 Enhanced LED Control, Address 25G (0x19) . . . 134
Table 111 Global Interrupt Status, Address 29G (0x1D) . . . 135
Table 112 Clause 45 Registers Page Space . . . 136
Table 113 PCS Status 1, Address 3.1 . . . 137

Table 114 EEE Capability, Address 3.20 . . . 137
Table 115 EEE Wake Error Counter, Address 3.22 . . . 137
Table 116 EEE Advertisement, Address 7.60 . . . 138
Table 117 EEE Advertisement, Address 7.61 . . . 138
Table 118 802.3bf Registers . . . 138
Table 119 Register Groups in IP_1588 . . . 140
Table 120 Registers in IP_1588_TOP_CFG_STAT . . . 141
Table 121 Fields in INTERFACE_CTL . . . 141
Table 122 Fields in ANALYZER_MODE . . . 142
Table 123 Fields in SPARE_REGISTER . . . 142
Table 124 Registers in IP_1588_LTC . . . 143
Table 125 Fields in LTC_CTRL . . . 143
Table 126 Fields in LTC_LOAD_SEC_H . . . 144
Table 127 Fields in LTC_LOAD_SEC_L . . . 145
Table 128 Fields in LTC_LOAD_NS . . . 145
Table 129 Fields in LTC_SAVED_SEC_H . . . 145
Table 130 Fields in LTC_SAVED_SEC_L . . . 145
Table 131 Fields in LTC_SAVED_NS . . . 146
Table 132 Fields in LTC_SEQUENCE . . . 146
Table 133 Fields in LTC_SEQ . . . 146
Table 134 Fields in LTC_AUTO_ADJUST . . . 147
Table 135 Fields in LTC_1PPS_WIDTH_ADJ . . . 147
Table 136 Registers in TS_FIFO_SI . . . 147
Table 137 Fields in TS_FIFO_SI_CFG . . . 148
Table 138 Fields in TS_FIFO_SI_TX_CNT . . . 148
Table 139 Registers in INGR_PREDICTOR . . . 148
Table 140 Fields in IG_CFG . . . 149
Table 141 Fields in IG_PMA . . . 149
Table 142 Fields in IG_XFI . . . 150
Table 143 Fields in IG_OTN . . . 150
Table 144 Registers in EGR_PREDICTOR . . . 150
Table 145 Fields in EG_CFG . . . 151
Table 146 Fields in EG_WIS_FRAME . . . 151
Table 147 Fields in EG_WIS_DELAYS . . . 152
Table 148 Fields in EG_PMA . . . 152
Table 149 Fields in EG_XFI . . . 152
Table 150 Fields in EG_OTN . . . 153
Table 151 Registers in MISC_CFG . . . 153
Table 152 Fields in CFG . . . 153
Table 153 Registers in INGR_IP_1588_CFG_STAT . . . 154
Table 154 Fields in INGR_INT_STATUS . . . 154
Table 155 Fields in INGR_INT_MASK . . . 155
Table 156 Fields in INGR_SPARE_REGISTER . . . 156
Table 157 Registers in INGR_IP_1588_TSP . . . 156
Table 158 Fields in INGR_TSP_CTRL . . . 157
Table 159 Fields in INGR_TSP_STAT . . . 157
Table 160 Fields in INGR_LOCAL_LATENCY . . . 157
Table 161 Fields in INGR_PATH_DELAY . . . 158
Table 162 Fields in INGR_DELAY_ASYMMETRY . . . 158
Table 163 Registers in INGR_IP_1588_DF . . . 158
Table 164 Fields in INGR_DF_CTRL . . . 158
Table 165 Registers in INGR_IP_1588_TSFIFO . . . 159
Table 166 Fields in INGR_TSFIFO_CSR . . . 159
Table 167 Fields in INGR_TSFIFO_0 . . . 160
Table 168 Fields in INGR_TSFIFO_1 . . . 161
Table 169 Fields in INGR_TSFIFO_2 . . . 161
Table 170 Fields in INGR_TSFIFO_3 . . . 162
Table 171 Fields in INGR_TSFIFO_4 . . . 162
Table 172 Fields in INGR_TSFIFO_5 . . . 162

Table 173 Fields in INGR_TSFIFO_6 . . . 162
Table 174 Fields in INGR_TSFIFO_DROP_CNT . . . 163
Table 175 Registers in INGR_IP_1588_RW . . . 163
Table 176 Fields in INGR_RW_CTRL . . . 163
Table 177 Fields in INGR_RW_MODFRM_CNT . . . 164
Table 178 Fields in INGR_RW_FCS_ERR_CNT . . . 164
Table 179 Fields in INGR_RW_PREAMBLE_ERR_CNT . . . 164
Table 180 Registers in EGR_IP_1588_CFG_STAT . . . 164
Table 181 Fields in EGR_INT_STATUS . . . 165
Table 182 Fields in EGR_INT_MASK . . . 166
Table 183 Fields in EGR_SPARE_REGISTER . . . 167
Table 184 Registers in EGR_IP_1588_TSP . . . 167
Table 185 Fields in EGR_TSP_CTRL . . . 167
Table 186 Fields in EGR_TSP_STAT . . . 168
Table 187 Fields in EGR_LOCAL_LATENCY . . . 168
Table 188 Fields in EGR_PATH_DELAY . . . 168
Table 189 Fields in EGR_DELAY_ASYMMETRY . . . 169
Table 190 Registers in EGR_IP_1588_DF . . . 169
Table 191 Fields in EGR_DF_CTRL . . . 169
Table 192 Registers in EGR_IP_1588_TSFIFO . . . 170
Table 193 Fields in EGR_TSFIFO_CSR . . . 170
Table 194 Fields in EGR_TSFIFO_0 . . . 171
Table 195 Fields in EGR_TSFIFO_1 . . . 172
Table 196 Fields in EGR_TSFIFO_2 . . . 172
Table 197 Fields in EGR_TSFIFO_3 . . . 173
Table 198 Fields in EGR_TSFIFO_4 . . . 173
Table 199 Fields in EGR_TSFIFO_5 . . . 173
Table 200 Fields in EGR_TSFIFO_6 . . . 173
Table 201 Fields in EGR_TSFIFO_DROP_CNT . . . 174
Table 202 Registers in EGR_IP_1588_RW . . . 174
Table 203 Fields in EGR_RW_CTRL . . . 174
Table 204 Fields in EGR_RW_MODFRM_CNT . . . 175
Table 205 Fields in EGR_RW_FCS_ERR_CNT . . . 175
Table 206 Fields in EGR_RW_PREAMBLE_ERR_CNT . . . 175
Table 207 Register Groups in Egress0 Ethernet Comparator . . . 175
Table 208 Registers in EGR0_ETH1_NXT_PROTOCOL . . . 176
Table 209 Fields in EGR0_ETH1_NXT_PROTOCOL . . . 177
Table 210 Fields in EGR0_ETH1_VLAN_TPID_CFG . . . 177
Table 211 Fields in EGR0_ETH1_TAG_MODE . . . 177
Table 212 Fields in EGR0_ETH1_ETYPE_MATCH . . . 178
Table 213 Registers in EGR0_ETH1_FLOW_CFG . . . 178
Table 214 Fields in EGR0_ETH1_FLOW_ENABLE . . . 178
Table 215 Fields in EGR0_ETH1_MATCH_MODE . . . 179
Table 216 Fields in EGR0_ETH1_ADDR_MATCH_1 . . . 180
Table 217 Fields in EGR0_ETH1_ADDR_MATCH_2 . . . 180
Table 218 Fields in EGR0_ETH1_VLAN_TAG_RANGE_I_TAG . . . 180
Table 219 Fields in EGR0_ETH1_VLAN_TAG1 . . . 181
Table 220 Fields in EGR0_ETH1_VLAN_TAG2_I_TAG . . . 181
Table 221 Registers in EGR0_ETH2_NXT_PROTOCOL . . . 182
Table 222 Fields in EGR0_ETH2_NXT_PROTOCOL . . . 182
Table 223 Fields in EGR0_ETH2_VLAN_TPID_CFG . . . 182
Table 224 Fields in EGR0_ETH2_ETYPE_MATCH . . . 183
Table 225 Registers in EGR0_ETH2_FLOW_CFG . . . 183
Table 226 Fields in EGR0_ETH2_FLOW_ENABLE . . . 183
Table 227 Fields in EGR0_ETH2_MATCH_MODE . . . 184
Table 228 Fields in EGR0_ETH2_ADDR_MATCH_1 . . . 185
Table 229 Fields in EGR0_ETH2_ADDR_MATCH_2 . . . 185
Table 230 Fields in EGR0_ETH2_VLAN_TAG_RANGE_I_TAG . . . 185
Table 231 Fields in EGR0_ETH2_VLAN_TAG1 . . . 186

Table 232 Fields in EGR0_ETH2_VLAN_TAG2_I_TAG 186
Table 233 Registers in EGR0_MPLS_NXT_COMPARATOR 186
Table 234 Fields in EGR0_MPLS_NXT_COMPARATOR 186
Table 235 Registers in EGR0_MPLS_FLOW_CFG 187
Table 236 Fields in EGR0_MPLS_FLOW_CONTROL 188
Table 237 Fields in EGR0_MPLS_LABEL_RANGE_LOWER_0 188
Table 238 Fields in EGR0_MPLS_LABEL_RANGE_UPPER_0 189
Table 239 Fields in EGR0_MPLS_LABEL_RANGE_LOWER_1 189
Table 240 Fields in EGR0_MPLS_LABEL_RANGE_UPPER_1 189
Table 241 Fields in EGR0_MPLS_LABEL_RANGE_LOWER_2 189
Table 242 Fields in EGR0_MPLS_LABEL_RANGE_UPPER_2 190
Table 243 Fields in EGR0_MPLS_LABEL_RANGE_LOWER_3 190
Table 244 Fields in EGR0_MPLS_LABEL_RANGE_UPPER_3 190
Table 245 Registers in EGR0_IP1_NXT_PROTOCOL 190
Table 246 Fields in EGR0_IP1_NXT_COMPARATOR 191
Table 247 Fields in EGR0_IP1_MODE 191
Table 248 Fields in EGR0_IP1_PROT_MATCH_1 192
Table 249 Fields in EGR0_IP1_PROT_MATCH_2_UPPER 192
Table 250 Fields in EGR0_IP1_PROT_MATCH_2_LOWER 192
Table 251 Fields in EGR0_IP1_PROT_MASK_2_UPPER 193
Table 252 Fields in EGR0_IP1_PROT_MASK_2_LOWER 193
Table 253 Fields in EGR0_IP1_PROT_OFFSET_2 193
Table 254 Fields in EGR0_IP1_UDP_CHKSUM_CFG 194
Table 255 Fields in EGR0_IP1_FRAME_SIG_CFG 194
Table 256 Registers in EGR0_IP1_FLOW_CFG 194
Table 257 Fields in EGR0_IP1_FLOW_ENA 195
Table 258 Fields in EGR0_IP1_FLOW_MATCH_UPPER 196
Table 259 Fields in EGR0_IP1_FLOW_MATCH_UPPER_MID 196
Table 260 Fields in EGR0_IP1_FLOW_MATCH_LOWER_MID 196
Table 261 Fields in EGR0_IP1_FLOW_MATCH_LOWER 196
Table 262 Fields in EGR0_IP1_FLOW_MASK_UPPER 197
Table 263 Fields in EGR0_IP1_FLOW_MASK_UPPER_MID 197
Table 264 Fields in EGR0_IP1_FLOW_MASK_LOWER_MID 197
Table 265 Fields in EGR0_IP1_FLOW_MASK_LOWER 197
Table 266 Registers in EGR0_IP2_NXT_PROTOCOL 198
Table 267 Fields in EGR0_IP2_NXT_COMPARATOR 198
Table 268 Fields in EGR0_IP2_MODE 199
Table 269 Fields in EGR0_IP2_PROT_MATCH_1 199
Table 270 Fields in EGR0_IP2_PROT_MATCH_2_UPPER 199
Table 271 Fields in EGR0_IP2_PROT_MATCH_2_LOWER 199
Table 272 Fields in EGR0_IP2_PROT_MASK_2_UPPER 200
Table 273 Fields in EGR0_IP2_PROT_MASK_2_LOWER 200
Table 274 Fields in EGR0_IP2_PROT_OFFSET_2 200
Table 275 Fields in EGR0_IP2_UDP_CHKSUM_CFG 201
Table 276 Fields in EGR0_IP2_FRAME_SIG_CFG 201
Table 277 Registers in EGR0_IP2_FLOW_CFG 201
Table 278 Fields in EGR0_IP2_FLOW_ENA 202
Table 279 Fields in EGR0_IP2_FLOW_MATCH_UPPER 203
Table 280 Fields in EGR0_IP2_FLOW_MATCH_UPPER_MID 203
Table 281 Fields in EGR0_IP2_FLOW_MATCH_LOWER_MID 203
Table 282 Fields in EGR0_IP2_FLOW_MATCH_LOWER 203
Table 283 Fields in EGR0_IP2_FLOW_MASK_UPPER 204
Table 284 Fields in EGR0_IP2_FLOW_MASK_UPPER_MID 204
Table 285 Fields in EGR0_IP2_FLOW_MASK_LOWER_MID 204
Table 286 Fields in EGR0_IP2_FLOW_MASK_LOWER 204
Table 287 Registers in EGR0_PTP_FLOW 205
Table 288 Fields in EGR0_PTP_FLOW_ENA 205
Table 289 Fields in EGR0_PTP_FLOW_MATCH_UPPER 205
Table 290 Fields in EGR0_PTP_FLOW_MATCH_LOWER 206

Table 291 Fields in EGR0_PTP_FLOW_MASK_UPPER . . . 206
Table 292 Fields in EGR0_PTP_FLOW_MASK_LOWER . . . 206
Table 293 Fields in EGR0_PTP_DOMAIN_RANGE . . . 206
Table 294 Fields in EGR0_PTP_ACTION . . . 207
Table 295 Fields in EGR0_PTP_ACTION_2 . . . 208
Table 296 Fields in EGR0_PTP_ZERO_FIELD_CTL . . . 208
Table 297 Registers in EGR0_PTP_IP_CHKSUM_CTL . . . 209
Table 298 Fields in EGR0_PTP_IP_CKSUM_SEL . . . 209
Table 299 Registers in EGR0_FRAME_SIG_CFG . . . 209
Table 300 Fields in EGR0_FSB_CFG . . . 210
Table 301 Fields in EGR0_FSB_MAP_REG_0 . . . 210
Table 302 Fields in EGR0_FSB_MAP_REG_1 . . . 211
Table 303 Fields in EGR0_FSB_MAP_REG_2 . . . 211
Table 304 Fields in EGR0_FSB_MAP_REG_3 . . . 211
Table 305 Register Groups in Ingress0 Ethernet Comparator . . . 211
Table 306 Registers in INGR0_ETH1_NXT_PROTOCOL . . . 212
Table 307 Fields in INGR0_ETH1_NXT_PROTOCOL . . . 213
Table 308 Fields in INGR0_ETH1_VLAN_TPID_CFG . . . 213
Table 309 Fields in INGR0_ETH1_TAG_MODE . . . 213
Table 310 Fields in INGR0_ETH1_ETYPE_MATCH . . . 214
Table 311 Registers in INGR0_ETH1_FLOW_CFG . . . 214
Table 312 Fields in INGR0_ETH1_FLOW_ENABLE . . . 214
Table 313 Fields in INGR0_ETH1_MATCH_MODE . . . 215
Table 314 Fields in INGR0_ETH1_ADDR_MATCH_1 . . . 216
Table 315 Fields in INGR0_ETH1_ADDR_MATCH_2 . . . 216
Table 316 Fields in INGR0_ETH1_VLAN_TAG_RANGE_I_TAG . . . 216
Table 317 Fields in INGR0_ETH1_VLAN_TAG1 . . . 217
Table 318 Fields in INGR0_ETH1_VLAN_TAG2_I_TAG . . . 217
Table 319 Registers in INGR0_ETH2_NXT_PROTOCOL . . . 218
Table 320 Fields in INGR0_ETH2_NXT_PROTOCOL . . . 218
Table 321 Fields in INGR0_ETH2_VLAN_TPID_CFG . . . 218
Table 322 Fields in INGR0_ETH2_ETYPE_MATCH . . . 219
Table 323 Registers in INGR0_ETH2_FLOW_CFG . . . 219
Table 324 Fields in INGR0_ETH2_FLOW_ENABLE . . . 219
Table 325 Fields in INGR0_ETH2_MATCH_MODE . . . 220
Table 326 Fields in INGR0_ETH2_ADDR_MATCH_1 . . . 221
Table 327 Fields in INGR0_ETH2_ADDR_MATCH_2 . . . 221
Table 328 Fields in INGR0_ETH2_VLAN_TAG_RANGE_I_TAG . . . 221
Table 329 Fields in INGR0_ETH2_VLAN_TAG1 . . . 222
Table 330 Fields in INGR0_ETH2_VLAN_TAG2_I_TAG . . . 222
Table 331 Registers in INGR0_MPLS_NXT_COMPARATOR . . . 222
Table 332 Fields in INGR0_MPLS_NXT_COMPARATOR . . . 223
Table 333 Registers in INGR0_MPLS_FLOW_CFG . . . 223
Table 334 Fields in INGR0_MPLS_FLOW_CONTROL . . . 224
Table 335 Fields in INGR0_MPLS_LABEL_RANGE_LOWER_0 . . . 224
Table 336 Fields in INGR0_MPLS_LABEL_RANGE_UPPER_0 . . . 225
Table 337 Fields in INGR0_MPLS_LABEL_RANGE_LOWER_1 . . . 225
Table 338 Fields in INGR0_MPLS_LABEL_RANGE_UPPER_1 . . . 225
Table 339 Fields in INGR0_MPLS_LABEL_RANGE_LOWER_2 . . . 225
Table 340 Fields in INGR0_MPLS_LABEL_RANGE_UPPER_2 . . . 226
Table 341 Fields in INGR0_MPLS_LABEL_RANGE_LOWER_3 . . . 226
Table 342 Fields in INGR0_MPLS_LABEL_RANGE_UPPER_3 . . . 226
Table 343 Registers in INGR0_IP1_NXT_PROTOCOL . . . 226
Table 344 Fields in INGR0_IP1_NXT_COMPARATOR . . . 227
Table 345 Fields in INGR0_IP1_MODE . . . 227
Table 346 Fields in INGR0_IP1_PROT_MATCH_1 . . . 228
Table 347 Fields in INGR0_IP1_PROT_MATCH_2_UPPER . . . 228
Table 348 Fields in INGR0_IP1_PROT_MATCH_2_LOWER . . . 228
Table 349 Fields in INGR0_IP1_PROT_MASK_2_UPPER . . . 229

Table 350 Fields in INGR0_IP1_PROT_MASK_2_LOWER . . . 229
Table 351 Fields in INGR0_IP1_PROT_OFFSET_2 . . . 229
Table 352 Fields in INGR0_IP1_UDP_CHKSUM_CFG . . . 230
Table 353 Registers in INGR0_IP1_FLOW_CFG . . . 230
Table 354 Fields in INGR0_IP1_FLOW_ENA . . . 231
Table 355 Fields in INGR0_IP1_FLOW_MATCH_UPPER . . . 231
Table 356 Fields in INGR0_IP1_FLOW_MATCH_UPPER_MID . . . 232
Table 357 Fields in INGR0_IP1_FLOW_MATCH_LOWER_MID . . . 232
Table 358 Fields in INGR0_IP1_FLOW_MATCH_LOWER . . . 232
Table 359 Fields in INGR0_IP1_FLOW_MASK_UPPER . . . 232
Table 360 Fields in INGR0_IP1_FLOW_MASK_UPPER_MID . . . 233
Table 361 Fields in INGR0_IP1_FLOW_MASK_LOWER_MID . . . 233
Table 362 Fields in INGR0_IP1_FLOW_MASK_LOWER . . . 233
Table 363 Registers in INGR0_IP2_NXT_PROTOCOL . . . 233
Table 364 Fields in INGR0_IP2_NXT_COMPARATOR . . . 234
Table 365 Fields in INGR0_IP2_MODE . . . 234
Table 366 Fields in INGR0_IP2_PROT_MATCH_1 . . . 235
Table 367 Fields in INGR0_IP2_PROT_MATCH_2_UPPER . . . 235
Table 368 Fields in INGR0_IP2_PROT_MATCH_2_LOWER . . . 235
Table 369 Fields in INGR0_IP2_PROT_MASK_2_UPPER . . . 236
Table 370 Fields in INGR0_IP2_PROT_MASK_2_LOWER . . . 236
Table 371 Fields in INGR0_IP2_PROT_OFFSET_2 . . . 236
Table 372 Fields in INGR0_IP2_UDP_CHKSUM_CFG . . . 237
Table 373 Registers in INGR0_IP2_FLOW_CFG . . . 237
Table 374 Fields in INGR0_IP2_FLOW_ENA . . . 238
Table 375 Fields in INGR0_IP2_FLOW_MATCH_UPPER . . . 238
Table 376 Fields in INGR0_IP2_FLOW_MATCH_UPPER_MID . . . 239
Table 377 Fields in INGR0_IP2_FLOW_MATCH_LOWER_MID . . . 239
Table 378 Fields in INGR0_IP2_FLOW_MATCH_LOWER . . . 239
Table 379 Fields in INGR0_IP2_FLOW_MASK_UPPER . . . 240
Table 380 Fields in INGR0_IP2_FLOW_MASK_UPPER_MID . . . 240
Table 381 Fields in INGR0_IP2_FLOW_MASK_LOWER_MID . . . 240
Table 382 Fields in INGR0_IP2_FLOW_MASK_LOWER . . . 241
Table 383 Registers in INGR0_PTP_FLOW . . . 241
Table 384 Fields in INGR0_PTP_FLOW_ENA . . . 241
Table 385 Fields in INGR0_PTP_FLOW_MATCH_UPPER . . . 242
Table 386 Fields in INGR0_PTP_FLOW_MATCH_LOWER . . . 242
Table 387 Fields in INGR0_PTP_FLOW_MASK_UPPER . . . 242
Table 388 Fields in INGR0_PTP_FLOW_MASK_LOWER . . . 242
Table 389 Fields in INGR0_PTP_DOMAIN_RANGE . . . 243
Table 390 Fields in INGR0_PTP_ACTION . . . 243
Table 391 Fields in INGR0_PTP_ACTION_2 . . . 244
Table 392 Fields in INGR0_PTP_ZERO_FIELD_CTL . . . 245
Table 393 Registers in INGR0_PTP_IP_CHKSUM_CTL . . . 245
Table 394 Fields in INGR0_PTP_IP_CKSUM_SEL . . . 245
Table 395 Register Groups in Egress1 Ethernet Comparator . . . 245
Table 396 Registers in EGR1_ETH1_NXT_PROTOCOL . . . 246
Table 397 Fields in EGR1_ETH1_NXT_PROTOCOL . . . 247
Table 398 Fields in EGR1_ETH1_VLAN_TPID_CFG . . . 247
Table 399 Fields in EGR1_ETH1_TAG_MODE . . . 247
Table 400 Fields in EGR1_ETH1_ETYPE_MATCH . . . 248
Table 401 Registers in EGR1_ETH1_FLOW_CFG . . . 248
Table 402 Fields in EGR1_ETH1_FLOW_ENABLE . . . 248
Table 403 Fields in EGR1_ETH1_MATCH_MODE . . . 249
Table 404 Fields in EGR1_ETH1_ADDR_MATCH_1 . . . 250
Table 405 Fields in EGR1_ETH1_ADDR_MATCH_2 . . . 250
Table 406 Fields in EGR1_ETH1_VLAN_TAG_RANGE_I_TAG . . . 250
Table 407 Fields in EGR1_ETH1_VLAN_TAG1 . . . 251
Table 408 Fields in EGR1_ETH1_VLAN_TAG2_I_TAG . . . 251

Table 409 Registers in EGR1_ETH2_NXT_PROTOCOL . . . 252
Table 410 Fields in EGR1_ETH2_NXT_PROTOCOL . . . 252
Table 411 Fields in EGR1_ETH2_VLAN_TPID_CFG . . . 252
Table 412 Fields in EGR1_ETH2_ETYPE_MATCH . . . 253
Table 413 Registers in EGR1_ETH2_FLOW_CFG . . . 253
Table 414 Fields in EGR1_ETH2_FLOW_ENABLE . . . 253
Table 415 Fields in EGR1_ETH2_MATCH_MODE . . . 254
Table 416 Fields in EGR1_ETH2_ADDR_MATCH_1 . . . 255
Table 417 Fields in EGR1_ETH2_ADDR_MATCH_2 . . . 255
Table 418 Fields in EGR1_ETH2_VLAN_TAG_RANGE_I_TAG . . . 255
Table 419 Fields in EGR1_ETH2_VLAN_TAG1 . . . 256
Table 420 Fields in EGR1_ETH2_VLAN_TAG2_I_TAG . . . 256
Table 421 Registers in EGR1_MPLS_NXT_COMPARATOR . . . 256
Table 422 Fields in EGR1_MPLS_NXT_COMPARATOR . . . 256
Table 423 Registers in EGR1_MPLS_FLOW_CFG . . . 257
Table 424 Fields in EGR1_MPLS_FLOW_CONTROL . . . 258
Table 425 Fields in EGR1_MPLS_LABEL_RANGE_LOWER_0 . . . 258
Table 426 Fields in EGR1_MPLS_LABEL_RANGE_UPPER_0 . . . 259
Table 427 Fields in EGR1_MPLS_LABEL_RANGE_LOWER_1 . . . 259
Table 428 Fields in EGR1_MPLS_LABEL_RANGE_UPPER_1 . . . 259
Table 429 Fields in EGR1_MPLS_LABEL_RANGE_LOWER_2 . . . 259
Table 430 Fields in EGR1_MPLS_LABEL_RANGE_UPPER_2 . . . 260
Table 431 Fields in EGR1_MPLS_LABEL_RANGE_LOWER_3 . . . 260
Table 432 Fields in EGR1_MPLS_LABEL_RANGE_UPPER_3 . . . 260
Table 433 Registers in EGR1_IP1_NXT_PROTOCOL . . . 260
Table 434 Fields in EGR1_IP1_NXT_COMPARATOR . . . 261
Table 435 Fields in EGR1_IP1_MODE . . . 261
Table 436 Fields in EGR1_IP1_PROT_MATCH_1 . . . 262
Table 437 Fields in EGR1_IP1_PROT_MATCH_2_UPPER . . . 262
Table 438 Fields in EGR1_IP1_PROT_MATCH_2_LOWER . . . 262
Table 439 Fields in EGR1_IP1_PROT_MASK_2_UPPER . . . 263
Table 440 Fields in EGR1_IP1_PROT_MASK_2_LOWER . . . 263
Table 441 Fields in EGR1_IP1_PROT_OFFSET_2 . . . 263
Table 442 Fields in EGR1_IP1_UDP_CHKSUM_CFG . . . 264
Table 443 Fields in EGR1_IP1_FRAME_SIG_CFG . . . 264
Table 444 Registers in EGR1_IP1_FLOW_CFG . . . 264
Table 445 Fields in EGR1_IP1_FLOW_ENA . . . 265
Table 446 Fields in EGR1_IP1_FLOW_MATCH_UPPER . . . 266
Table 447 Fields in EGR1_IP1_FLOW_MATCH_UPPER_MID . . . 266
Table 448 Fields in EGR1_IP1_FLOW_MATCH_LOWER_MID . . . 266
Table 449 Fields in EGR1_IP1_FLOW_MATCH_LOWER . . . 266
Table 450 Fields in EGR1_IP1_FLOW_MASK_UPPER . . . 267
Table 451 Fields in EGR1_IP1_FLOW_MASK_UPPER_MID . . . 267
Table 452 Fields in EGR1_IP1_FLOW_MASK_LOWER_MID . . . 267
Table 453 Fields in EGR1_IP1_FLOW_MASK_LOWER . . . 267
Table 454 Registers in EGR1_IP2_NXT_PROTOCOL . . . 268
Table 455 Fields in EGR1_IP2_NXT_COMPARATOR . . . 268
Table 456 Fields in EGR1_IP2_MODE . . . 269
Table 457 Fields in EGR1_IP2_PROT_MATCH_1 . . . 269
Table 458 Fields in EGR1_IP2_PROT_MATCH_2_UPPER . . . 269
Table 459 Fields in EGR1_IP2_PROT_MATCH_2_LOWER . . . 269
Table 460 Fields in EGR1_IP2_PROT_MASK_2_UPPER . . . 270
Table 461 Fields in EGR1_IP2_PROT_MASK_2_LOWER . . . 270
Table 462 Fields in EGR1_IP2_PROT_OFFSET_2 . . . 270
Table 463 Fields in EGR1_IP2_UDP_CHKSUM_CFG . . . 271
Table 464 Fields in EGR1_IP2_FRAME_SIG_CFG . . . 271
Table 465 Registers in EGR1_IP2_FLOW_CFG . . . 271
Table 466 Fields in EGR1_IP2_FLOW_ENA . . . 272
Table 467 Fields in EGR1_IP2_FLOW_MATCH_UPPER . . . 273

Table 468 Fields in EGR1_IP2_FLOW_MATCH_UPPER_MID . . . 273
Table 469 Fields in EGR1_IP2_FLOW_MATCH_LOWER_MID . . . 273
Table 470 Fields in EGR1_IP2_FLOW_MATCH_LOWER . . . 273
Table 471 Fields in EGR1_IP2_FLOW_MASK_UPPER . . . 274
Table 472 Fields in EGR1_IP2_FLOW_MASK_UPPER_MID . . . 274
Table 473 Fields in EGR1_IP2_FLOW_MASK_LOWER_MID . . . 274
Table 474 Fields in EGR1_IP2_FLOW_MASK_LOWER . . . 274
Table 475 Registers in EGR1_PTP_FLOW . . . 275
Table 476 Fields in EGR1_PTP_FLOW_ENA . . . 275
Table 477 Fields in EGR1_PTP_FLOW_MATCH_UPPER . . . 275
Table 478 Fields in EGR1_PTP_FLOW_MATCH_LOWER . . . 276
Table 479 Fields in EGR1_PTP_FLOW_MASK_UPPER . . . 276
Table 480 Fields in EGR1_PTP_FLOW_MASK_LOWER . . . 276
Table 481 Fields in EGR1_PTP_DOMAIN_RANGE . . . 276
Table 482 Fields in EGR1_PTP_ACTION . . . 277
Table 483 Fields in EGR1_PTP_ACTION_2 . . . 278
Table 484 Fields in EGR1_PTP_ZERO_FIELD_CTL . . . 278
Table 485 Registers in EGR1_PTP_IP_CHKSUM_CTL . . . 279
Table 486 Fields in EGR1_PTP_IP_CKSUM_SEL . . . 279
Table 487 Registers in EGR1_FRAME_SIG_CFG . . . 279
Table 488 Fields in EGR1_FSB_CFG . . . 280
Table 489 Fields in EGR1_FSB_MAP_REG_0 . . . 280
Table 490 Fields in EGR1_FSB_MAP_REG_1 . . . 281
Table 491 Fields in EGR1_FSB_MAP_REG_2 . . . 281
Table 492 Fields in EGR1_FSB_MAP_REG_3 . . . 281
Table 493 Register Groups in Ingress1 Ethernet Comparator . . . 281
Table 494 Registers in INGR1_ETH1_NXT_PROTOCOL . . . 282
Table 495 Fields in INGR1_ETH1_NXT_PROTOCOL . . . 283
Table 496 Fields in INGR1_ETH1_VLAN_TPID_CFG . . . 283
Table 497 Fields in INGR1_ETH1_TAG_MODE . . . 283
Table 498 Fields in INGR1_ETH1_ETYPE_MATCH . . . 284
Table 499 Registers in INGR1_ETH1_FLOW_CFG . . . 284
Table 500 Fields in INGR1_ETH1_FLOW_ENABLE . . . 284
Table 501 Fields in INGR1_ETH1_MATCH_MODE . . . 285
Table 502 Fields in INGR1_ETH1_ADDR_MATCH_1 . . . 286
Table 503 Fields in INGR1_ETH1_ADDR_MATCH_2 . . . 286
Table 504 Fields in INGR1_ETH1_VLAN_TAG_RANGE_I_TAG . . . 286
Table 505 Fields in INGR1_ETH1_VLAN_TAG1 . . . 287
Table 506 Fields in INGR1_ETH1_VLAN_TAG2_I_TAG . . . 287
Table 507 Registers in INGR1_ETH2_NXT_PROTOCOL . . . 288
Table 508 Fields in INGR1_ETH2_NXT_PROTOCOL . . . 288
Table 509 Fields in INGR1_ETH2_VLAN_TPID_CFG . . . 288
Table 510 Fields in INGR1_ETH2_ETYPE_MATCH . . . 289
Table 511 Registers in INGR1_ETH2_FLOW_CFG . . . 289
Table 512 Fields in INGR1_ETH2_FLOW_ENABLE . . . 289
Table 513 Fields in INGR1_ETH2_MATCH_MODE . . . 290
Table 514 Fields in INGR1_ETH2_ADDR_MATCH_1 . . . 291
Table 515 Fields in INGR1_ETH2_ADDR_MATCH_2 . . . 291
Table 516 Fields in INGR1_ETH2_VLAN_TAG_RANGE_I_TAG . . . 291
Table 517 Fields in INGR1_ETH2_VLAN_TAG1 . . . 292
Table 518 Fields in INGR1_ETH2_VLAN_TAG2_I_TAG . . . 292
Table 519 Registers in INGR1_MPLS_NXT_COMPARATOR . . . 292
Table 520 Fields in INGR1_MPLS_NXT_COMPARATOR . . . 293
Table 521 Registers in INGR1_MPLS_FLOW_CFG . . . 293
Table 522 Fields in INGR1_MPLS_FLOW_CONTROL . . . 294
Table 523 Fields in INGR1_MPLS_LABEL_RANGE_LOWER_0 . . . 294
Table 524 Fields in INGR1_MPLS_LABEL_RANGE_UPPER_0 . . . 295
Table 525 Fields in INGR1_MPLS_LABEL_RANGE_LOWER_1 . . . 295
Table 526 Fields in INGR1_MPLS_LABEL_RANGE_UPPER_1 . . . 295

Table 527 Fields in INGR1_MPLS_LABEL_RANGE_LOWER_2 . . . 295
Table 528 Fields in INGR1_MPLS_LABEL_RANGE_UPPER_2 . . . 296
Table 529 Fields in INGR1_MPLS_LABEL_RANGE_LOWER_3 . . . 296
Table 530 Fields in INGR1_MPLS_LABEL_RANGE_UPPER_3 . . . 296
Table 531 Registers in INGR1_IP1_NXT_PROTOCOL . . . 296
Table 532 Fields in INGR1_IP1_NXT_COMPARATOR . . . 297
Table 533 Fields in INGR1_IP1_MODE . . . 297
Table 534 Fields in INGR1_IP1_PROT_MATCH_1 . . . 298
Table 535 Fields in INGR1_IP1_PROT_MATCH_2_UPPER . . . 298
Table 536 Fields in INGR1_IP1_PROT_MATCH_2_LOWER . . . 298
Table 537 Fields in INGR1_IP1_PROT_MASK_2_UPPER . . . 299
Table 538 Fields in INGR1_IP1_PROT_MASK_2_LOWER . . . 299
Table 539 Fields in INGR1_IP1_PROT_OFFSET_2 . . . 299
Table 540 Fields in INGR1_IP1_UDP_CHKSUM_CFG . . . 300
Table 541 Registers in INGR1_IP1_FLOW_CFG . . . 300
Table 542 Fields in INGR1_IP1_FLOW_ENA . . . 301
Table 543 Fields in INGR1_IP1_FLOW_MATCH_UPPER . . . 301
Table 544 Fields in INGR1_IP1_FLOW_MATCH_UPPER_MID . . . 302
Table 545 Fields in INGR1_IP1_FLOW_MATCH_LOWER_MID . . . 302
Table 546 Fields in INGR1_IP1_FLOW_MATCH_LOWER . . . 302
Table 547 Fields in INGR1_IP1_FLOW_MASK_UPPER . . . 302
Table 548 Fields in INGR1_IP1_FLOW_MASK_UPPER_MID . . . 303
Table 549 Fields in INGR1_IP1_FLOW_MASK_LOWER_MID . . . 303
Table 550 Fields in INGR1_IP1_FLOW_MASK_LOWER . . . 303
Table 551 Registers in INGR1_IP2_NXT_PROTOCOL . . . 303
Table 552 Fields in INGR1_IP2_NXT_COMPARATOR . . . 304
Table 553 Fields in INGR1_IP2_MODE . . . 304
Table 554 Fields in INGR1_IP2_PROT_MATCH_1 . . . 305
Table 555 Fields in INGR1_IP2_PROT_MATCH_2_UPPER . . . 305
Table 556 Fields in INGR1_IP2_PROT_MATCH_2_LOWER . . . 305
Table 557 Fields in INGR1_IP2_PROT_MASK_2_UPPER . . . 306
Table 558 Fields in INGR1_IP2_PROT_MASK_2_LOWER . . . 306
Table 559 Fields in INGR1_IP2_PROT_OFFSET_2 . . . 306
Table 560 Fields in INGR1_IP2_UDP_CHKSUM_CFG . . . 307
Table 561 Registers in INGR1_IP2_FLOW_CFG . . . 307
Table 562 Fields in INGR1_IP2_FLOW_ENA . . . 308
Table 563 Fields in INGR1_IP2_FLOW_MATCH_UPPER . . . 308
Table 564 Fields in INGR1_IP2_FLOW_MATCH_UPPER_MID . . . 309
Table 565 Fields in INGR1_IP2_FLOW_MATCH_LOWER_MID . . . 309
Table 566 Fields in INGR1_IP2_FLOW_MATCH_LOWER . . . 309
Table 567 Fields in INGR1_IP2_FLOW_MASK_UPPER . . . 310
Table 568 Fields in INGR1_IP2_FLOW_MASK_UPPER_MID . . . 310
Table 569 Fields in INGR1_IP2_FLOW_MASK_LOWER_MID . . . 310
Table 570 Fields in INGR1_IP2_FLOW_MASK_LOWER . . . 311
Table 571 Registers in INGR1_PTP_FLOW . . . 311
Table 572 Fields in INGR1_PTP_FLOW_ENA . . . 311
Table 573 Fields in INGR1_PTP_FLOW_MATCH_UPPER . . . 312
Table 574 Fields in INGR1_PTP_FLOW_MATCH_LOWER . . . 312
Table 575 Fields in INGR1_PTP_FLOW_MASK_UPPER . . . 312
Table 576 Fields in INGR1_PTP_FLOW_MASK_LOWER . . . 312
Table 577 Fields in INGR1_PTP_DOMAIN_RANGE . . . 313
Table 578 Fields in INGR1_PTP_ACTION . . . 313
Table 579 Fields in INGR1_PTP_ACTION_2 . . . 314
Table 580 Fields in INGR1_PTP_ZERO_FIELD_CTL . . . 315
Table 581 Registers in INGR1_PTP_IP_CHKSUM_CTL . . . 315
Table 582 Fields in INGR1_PTP_IP_CKSUM_SEL . . . 315
Table 583 Register Groups in Egress2 Ethernet Comparator . . . 315
Table 584 Registers in EGR2_ETH1_NXT_PROTOCOL_A . . . 316
Table 585 Fields in EGR2_ETH1_NXT_PROTOCOL_A . . . 317

Table 586 Fields in EGR2_ETH1_VLAN_TPID_CFG_A . . . 317
Table 587 Fields in EGR2_ETH1_TAG_MODE_A . . . 317
Table 588 Fields in EGR2_ETH1_ETYPE_MATCH_A . . . 318
Table 589 Registers in EGR2_ETH1_NXT_PROTOCOL_B . . . 318
Table 590 Fields in EGR2_ETH1_NXT_PROTOCOL_B . . . 318
Table 591 Fields in EGR2_ETH1_VLAN_TPID_CFG_B . . . 319
Table 592 Fields in EGR2_ETH1_TAG_MODE_B . . . 319
Table 593 Fields in EGR2_ETH1_ETYPE_MATCH_B . . . 319
Table 594 Registers in EGR2_ETH1_FLOW_CFG . . . 320
Table 595 Fields in EGR2_ETH1_FLOW_ENABLE . . . 320
Table 596 Fields in EGR2_ETH1_MATCH_MODE . . . 321
Table 597 Fields in EGR2_ETH1_ADDR_MATCH_1 . . . 322
Table 598 Fields in EGR2_ETH1_ADDR_MATCH_2 . . . 322
Table 599 Fields in EGR2_ETH1_VLAN_TAG_RANGE_I_TAG . . . 322
Table 600 Fields in EGR2_ETH1_VLAN_TAG1 . . . 323
Table 601 Fields in EGR2_ETH1_VLAN_TAG2_I_TAG . . . 323
Table 602 Registers in EGR2_ETH2_NXT_PROTOCOL_A . . . 323
Table 603 Fields in EGR2_ETH2_NXT_PROTOCOL_A . . . 324
Table 604 Fields in EGR2_ETH2_VLAN_TPID_CFG_A . . . 324
Table 605 Fields in EGR2_ETH2_ETYPE_MATCH_A . . . 324
Table 606 Registers in EGR2_ETH2_FLOW_CFG . . . 325
Table 607 Fields in EGR2_ETH2_FLOW_ENABLE . . . 325
Table 608 Fields in EGR2_ETH2_MATCH_MODE . . . 326
Table 609 Fields in EGR2_ETH2_ADDR_MATCH_1 . . . 326
Table 610 Fields in EGR2_ETH2_ADDR_MATCH_2 . . . 327
Table 611 Fields in EGR2_ETH2_VLAN_TAG_RANGE_I_TAG . . . 327
Table 612 Fields in EGR2_ETH2_VLAN_TAG1 . . . 327
Table 613 Fields in EGR2_ETH2_VLAN_TAG2_I_TAG . . . 328
Table 614 Registers in EGR2_MPLS_NXT_COMPARATOR_A . . . 328
Table 615 Fields in EGR2_MPLS_NXT_COMPARATOR_A . . . 328
Table 616 Registers in EGR2_MPLS_FLOW_CFG . . . 329
Table 617 Fields in EGR2_MPLS_FLOW_CONTROL . . . 329
Table 618 Fields in EGR2_MPLS_LABEL_RANGE_LOWER_0 . . . 330
Table 619 Fields in EGR2_MPLS_LABEL_RANGE_UPPER_0 . . . 330
Table 620 Fields in EGR2_MPLS_LABEL_RANGE_LOWER_1 . . . 331
Table 621 Fields in EGR2_MPLS_LABEL_RANGE_UPPER_1 . . . 331
Table 622 Fields in EGR2_MPLS_LABEL_RANGE_LOWER_2 . . . 331
Table 623 Fields in EGR2_MPLS_LABEL_RANGE_UPPER_2 . . . 331
Table 624 Fields in EGR2_MPLS_LABEL_RANGE_LOWER_3 . . . 332
Table 625 Fields in EGR2_MPLS_LABEL_RANGE_UPPER_3 . . . 332
Table 626 Registers in EGR2_PTP_FLOW . . . 332
Table 627 Fields in EGR2_PTP_FLOW_ENA . . . 333
Table 628 Fields in EGR2_PTP_FLOW_MATCH_UPPER . . . 333
Table 629 Fields in EGR2_PTP_FLOW_MATCH_LOWER . . . 333
Table 630 Fields in EGR2_PTP_FLOW_MASK_UPPER . . . 334
Table 631 Fields in EGR2_PTP_FLOW_MASK_LOWER . . . 334
Table 632 Fields in EGR2_PTP_DOMAIN_RANGE . . . 334
Table 633 Fields in EGR2_PTP_ACTION . . . 334
Table 634 Fields in EGR2_PTP_ACTION_2 . . . 335
Table 635 Fields in EGR2_PTP_ZERO_FIELD_CTL . . . 336
Table 636 Register Groups in Ingress2 Ethernet Comparator . . . 336
Table 637 Registers in INGR2_ETH1_NXT_PROTOCOL_A . . . 337
Table 638 Fields in INGR2_ETH1_NXT_PROTOCOL_A . . . 337
Table 639 Fields in INGR2_ETH1_VLAN_TPID_CFG_A . . . 337
Table 640 Fields in INGR2_ETH1_TAG_MODE_A . . . 338
Table 641 Fields in INGR2_ETH1_ETYPE_MATCH_A . . . 338
Table 642 Registers in INGR2_ETH1_NXT_PROTOCOL_B . . . 338
Table 643 Fields in INGR2_ETH1_NXT_PROTOCOL_B . . . 339
Table 644 Fields in INGR2_ETH1_VLAN_TPID_CFG_B . . . 339

Table 645 Fields in INGR2_ETH1_TAG_MODE_B . . . 339
Table 646 Fields in INGR2_ETH1_ETYPE_MATCH_B . . . 340
Table 647 Registers in INGR2_ETH1_FLOW_CFG . . . 340
Table 648 Fields in INGR2_ETH1_FLOW_ENABLE . . . 341
Table 649 Fields in INGR2_ETH1_MATCH_MODE . . . 341
Table 650 Fields in INGR2_ETH1_ADDR_MATCH_1 . . . 342
Table 651 Fields in INGR2_ETH1_ADDR_MATCH_2 . . . 342
Table 652 Fields in INGR2_ETH1_VLAN_TAG_RANGE_I_TAG . . . 343
Table 653 Fields in INGR2_ETH1_VLAN_TAG1 . . . 343
Table 654 Fields in INGR2_ETH1_VLAN_TAG2_I_TAG . . . 344
Table 655 Registers in INGR2_ETH2_NXT_PROTOCOL_A . . . 344
Table 656 Fields in INGR2_ETH2_NXT_PROTOCOL_A . . . 344
Table 657 Fields in INGR2_ETH2_VLAN_TPID_CFG_A . . . 345
Table 658 Fields in INGR2_ETH2_ETYPE_MATCH_A . . . 345
Table 659 Registers in INGR2_ETH2_FLOW_CFG . . . 345
Table 660 Fields in INGR2_ETH2_FLOW_ENABLE . . . 346
Table 661 Fields in INGR2_ETH2_MATCH_MODE . . . 346
Table 662 Fields in INGR2_ETH2_ADDR_MATCH_1 . . . 347
Table 663 Fields in INGR2_ETH2_ADDR_MATCH_2 . . . 347
Table 664 Fields in INGR2_ETH2_VLAN_TAG_RANGE_I_TAG . . . 348
Table 665 Fields in INGR2_ETH2_VLAN_TAG1 . . . 348
Table 666 Fields in INGR2_ETH2_VLAN_TAG2_I_TAG . . . 348
Table 667 Registers in INGR2_MPLS_NXT_COMPARATOR_A . . . 349
Table 668 Fields in INGR2_MPLS_NXT_COMPARATOR_A . . . 349
Table 669 Registers in INGR2_MPLS_FLOW_CFG . . . 349
Table 670 Fields in INGR2_MPLS_FLOW_CONTROL . . . 350
Table 671 Fields in INGR2_MPLS_LABEL_RANGE_LOWER_0 . . . 351
Table 672 Fields in INGR2_MPLS_LABEL_RANGE_UPPER_0 . . . 351
Table 673 Fields in INGR2_MPLS_LABEL_RANGE_LOWER_1 . . . 351
Table 674 Fields in INGR2_MPLS_LABEL_RANGE_UPPER_1 . . . 351
Table 675 Fields in INGR2_MPLS_LABEL_RANGE_LOWER_2 . . . 352
Table 676 Fields in INGR2_MPLS_LABEL_RANGE_UPPER_2 . . . 352
Table 677 Fields in INGR2_MPLS_LABEL_RANGE_LOWER_3 . . . 352
Table 678 Fields in INGR2_MPLS_LABEL_RANGE_UPPER_3 . . . 352
Table 679 Registers in INGR2_PTP_FLOW . . . 353
Table 680 Fields in INGR2_PTP_FLOW_ENA . . . 353
Table 681 Fields in INGR2_PTP_FLOW_MATCH_UPPER . . . 354
Table 682 Fields in INGR2_PTP_FLOW_MATCH_LOWER . . . 354
Table 683 Fields in INGR2_PTP_FLOW_MASK_UPPER . . . 354
Table 684 Fields in INGR2_PTP_FLOW_MASK_LOWER . . . 354
Table 685 Fields in INGR2_PTP_DOMAIN_RANGE . . . 355
Table 686 Fields in INGR2_PTP_ACTION . . . 355
Table 687 Fields in INGR2_PTP_ACTION_2 . . . 356
Table 688 Fields in INGR2_PTP_ZERO_FIELD_CTL . . . 357
Table 689 VDD25 DC Characteristics . . . 358
Table 690 LED and GPIO Characteristics . . . 358
Table 691 Internal Pull-Up or Pull-Down Resistors . . . 358
Table 692 Reference Clock DC Characteristics . . . 359
Table 693 1588 Reference Clock DC Characteristics . . . 359
Table 694 SerDes Driver DC Specifications . . . 359
Table 695 SerDes Receiver DC Specifications . . . 361
Table 696 Enhanced SerDes Driver DC Specifications . . . 361
Table 697 Enhanced SerDes Receiver DC Specifications . . . 362
Table 698 Current Consumption . . . 362
Table 699 Thermal Diode Parameters . . . 363
Table 700 Reference Clock AC Characteristics for QSGMII 125 MHz Differential Clock . . . 364
Table 701 Recovered Clock AC Characteristics . . . 365
Table 702 SerDes Outputs AC Specifications . . . 366
Table 703 SerDes Driver Jitter Characteristics . . . 366

Table 704 SerDes Input AC Specifications . . . 366
Table 705 SerDes Receiver Jitter Tolerance . . . 367
Table 706 Enhanced SerDes Outputs AC Specifications, SGMII Mode . . . 367
Table 707 Enhanced SerDes Outputs AC Specifications, QSGMII Mode . . . 368
Table 708 Enhanced SerDes Driver Jitter Characteristics, QSGMII Mode . . . 368
Table 709 Enhanced SerDes Input AC Specifications, SGMII Mode . . . 369
Table 710 Enhanced SerDes Inputs AC Specifications, QSGMII Mode . . . 369
Table 711 Enhanced SerDes Receiver Jitter Tolerance, QSGMII Mode . . . 369
Table 712 Basic Serial LEDs AC Characteristics . . . 370
Table 713 Enhanced Serial LEDs AC Characteristics . . . 370
Table 714 JTAG Interface AC Specifications . . . 371
Table 715 Serial Management Interface AC Characteristics . . . 372
Table 716 Reset Timing Specifications . . . 373
Table 717 1588 Timing Specifications AC Characteristics . . . 373
Table 718 Serial Timestamp Interface . . . 374
Table 719 Local Time Counter Load/Save Timing Specifications . . . 374
Table 720 Recommended Operating Conditions . . . 375
Table 721 Stress Ratings . . . 375
Table 722 Pin Type Symbol Definitions . . . 376
Table 723 1588 Support Pins . . . 378
Table 724 GPIO and 1588 Support Pins . . . 379
Table 725 GPIO and SIGDET Pins . . . 379
Table 726 JTAG Pins . . . 379
Table 727 Miscellaneous Pins . . . 380
Table 728 Power Supply Pins . . . 381
Table 729 SerDes MAC Interface Pins . . . 382
Table 730 SerDes Media Interface Pins . . . 382
Table 731 SMI Pins . . . 383
Table 732 Twisted Pair Interface Pins . . . 383
Table 733 Thermal Resistances . . . 393
Table 734 Ordering Information . . . 398

1 Revision History

This section describes the changes that were implemented in this document. The changes are listed by revision, starting with the most current publication.

1.1 Revision 4.3

Revision 4.3 of this datasheet was published in February 2019. In revision 4.3, VeriPHY descriptions were updated and VeriPHY register information was deleted. For functional details of the VeriPHY suite and the operating instructions, see the ENT-AN0125 PHY, Integrated PHY-Switch VeriPHY - Cable Diagnostics application note.

1.2 Revision 4.2

Revision 4.2 was published in May 2018. The following is a summary of the changes in this document.

- Configuration procedure steps were clarified. For more information, see Configuration, page 91.
- The description of bit 10 was updated for register 0. For more information, see Table 41, page 95.
- Serial timestamp interface characteristics were updated. For more information, see Table 718, page 374.
- Design considerations were updated. For more information, see Design Considerations, page 394.

1.3 Revision 4.1

Revision 4.1 was published in August 2017. The following is a summary of the changes in this document.

- All references to LVDS were clarified to reflect LVDS compatibility.
- All references to CLK1588P/N were clarified as 1588_DIFF_INPUT_CLK_P/N.
- Operating modes were updated to correctly reflect available functionality.
- Delay measurement information was updated to correctly reflect available functionality.
- Serial Time Stamp/Frame Signature Output timing diagram was updated.
- Details on PTP accuracy and resolution were added.
- A note was added about the use of recovered clock outputs and fast link failure indication in EEE mode.
- Data Loops of the SerDes Macro image was updated.
- The equipment loop description was updated to correctly reflect available functionality.
- JTAG ID code was updated.
- Timeout values for ActiPHY link status timeout control registers were corrected.
- The default value for the disable carrier extension bit of the ActiPHY Control register was corrected to 1.
- EEE Control register descriptions were updated to indicate sticky bits.
- Register 17E3 bit 0 was updated to correctly reflect available functionality.
- Clarification footnotes were added for register 18G.
- Channel mask register descriptions were updated.
- Reference clock DC specifications were updated.
- Specifications for the IEEE 1588 timing, timestamp interface, and local time counter were updated.
- Design considerations were updated.
- Temperature specifications were added to the part ordering information.

1.4 Revision 4.0

Revision 4.0 of this datasheet was published in January 2013. The following is a summary of the changes implemented in the datasheet:

- An application diagram was added and existing application diagrams were updated to accurately reflect the supported interfaces.
- The block diagram was updated to better represent the functional blocks.
- Configuration information for operating modes was added.
- 1588_DIFF_INPUT_CLK configuration information was added.

- Several electrical specifications were updated.
- Design considerations were added.

1.5 Revision 2.1

Revision 2.1 of this datasheet was published in November 2012. The following is a summary of the changes implemented in the datasheet:

- Information on the methods to reconfigure the analyzer was updated.
- Functional description of the serial timestamp output interface was updated.
- Functional descriptions and DC specifications for the 1588 reference clock were added.Current consumption values were updated.
- Recovered clock AC characteristics were updated.
- An illustration showing the test circuit for the recovered clock output signals was added
- 1588 timing specifications were updated

1.6 Revision 2.0

Revision 2.0 of this datasheet was published in September 2012. This was the first publication of the document.

2 Product Overview

The VSC8574-01 is a low-power, quad-port Gigabit Ethernet transceiver with four SerDes interfaces for quad-port dual media capability. It also includes an integrated quad port two-wire serial multiplexer (MUX) to control SFPs or PoE modules. It has a low electromagnetic interference (EMI) line driver, and integrated line side termination resistors that conserve both power and printed circuit board (PCB) space.

The VSC8574-01 includes Microsemi's IEEE 1588 timestamping solution with encapsulation support. The device also includes dual recovered clock outputs to support Synchronous Ethernet applications. Programmable clock squelch control is included to inhibit undesirable clocks from propagating and to help prevent timing loops. The VSC8574-01 also supports a ring resiliency feature that allows a 1000BASE-T connected PHY port to switch between master and slave timing without having to interrupt the 1000BASE-T link.

Using Microsemi's EcoEthernet v2.0 PHY technology, the VSC8574-01 supports energy efficiency features such as Energy Efficient Ethernet (EEE), ActiPHY link down power savings, and PerfectReach that can adjust power based on the cable length. It also supports fully optimized power consumption in all link speeds.

Microsemi's mixed signal and digital signal processing (DSP) architecture is a key operational feature of the VSC8574-01, assuring robust performance even under less-than-favorable environmental conditions. It supports both half-duplex and full-duplex 10BASE-T, 100BASE-TX, and 1000BASE-T communication speeds over Category 5 (Cat5) unshielded twisted pair (UTP) cable at distances greater than 100 m, displaying excellent tolerance to NEXT, FEXT, echo, and other types of ambient environmental and system electronic noise. The device also supports four dual media ports that can support up to four 100BASE-FX, 1000BASE-X fiber, and/or triple-speed copper SFPs.

The following illustrations show a high-level, general view of typical VSC8574-01 applications.

Figure 1 • **Dual Media Application Diagram**

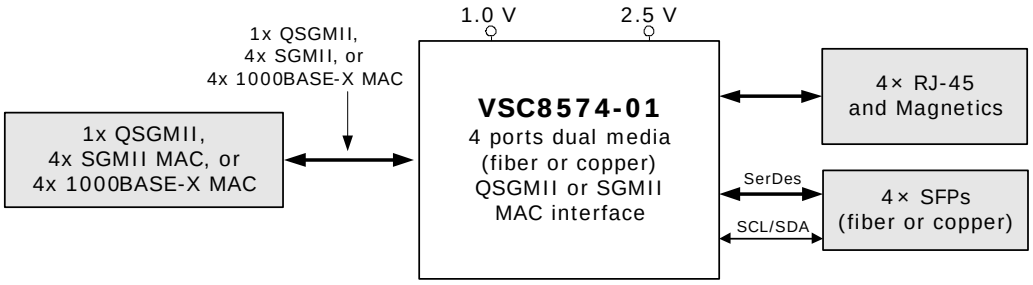

Figure 2 • **Copper Transceiver Application Diagram**

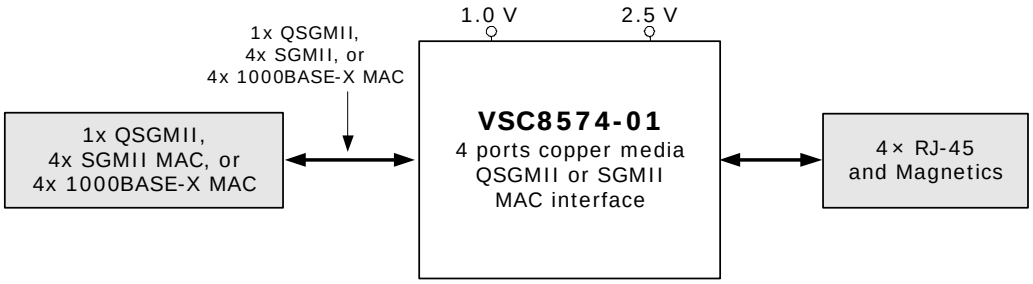

Figure 3 • **Fiber Media Transceiver Application Diagram**

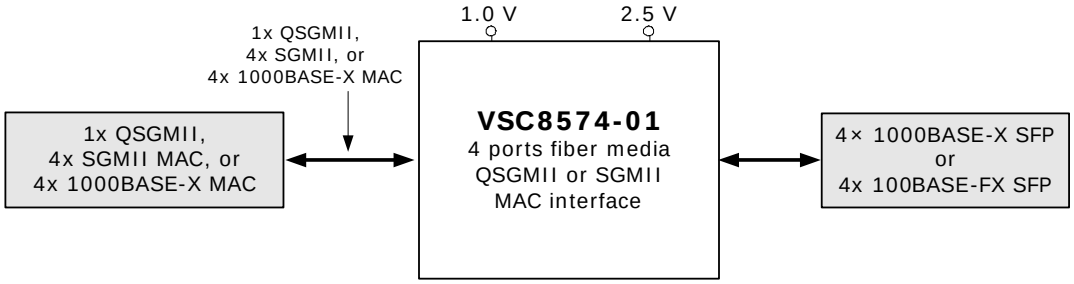

2.1 Key Features

This section lists the main features and benefits of the VSC8574-01 device.

2.1.1 Low Power

- Low power consumption of approximately 425 mW per port in 1000BASE-T mode, 200 mW per port in 100BASE-TX mode, 225 mW per port in 10BASE-T mode, and less than 115 mW per port in 100BASE-FX and 1000BASE-X modes
- ActiPHY™ link down power savings
- PerfectReach™ smart cable reach algorithm
- IEEE 802.3az-2010 Energy Efficient Ethernet idle power savings

2.1.2 Advanced Carrier Ethernet Support

- Support for IEEE 1588-2008 timestamping with encapsulation support
- Recovered clock outputs with programmable clock squelch control and fast link failure indication (<1 ms; worst-case <3 ms) for G.8261 Synchronous Ethernet applications
- Ring resiliency for maintaining linkup integrity when switching between 1000BASE-T master and slave timing
- Supports IEEE 802.3bf timing and synchronization standard
- Integrated quad two-wire serial mux to control SFP and PoE modules
- Support for IEEE 802.3ah unidirectional transport for 100BASE-FX and 1000BASE-X fiber media

2.1.3 Wide Range of Support

- Compliant with IEEE 802.3 (10BASE-T, 100BASE-TX, 1000BASE-T, 100BASE-FX, and 1000BASE-X) specifications
- Support for >16 kB jumbo frames in all speeds with programmable synchronization FIFOs
- Supports Cisco QSGMII v1.3, Cisco SGMII v1.9, 1000BASE-X MACs, IEEE 1149.1 JTAG boundary scan, and IEEE 1149.6 AC-JTAG
- Available in a low-cost, 256-pin BGA package with a 17 mm × 17 mm body size

2.1.4 Flexibility

- VeriPHY® cable diagnostics suite provides extensive network cable operating conditions and status
- Patented, low EMI line driver with integrated line side termination resistors
- Four programmable direct-drive LEDs per port with adjustable brightness levels using register controls; bi-color LED support using two LED pins
- Serial LED interface option
- Extensive test features including near end, far end, copper media connector, SerDes MAC/media loopback, and Ethernet packet generator with CRC error counter to decrease time-to-market

Note: All MAC interfaces must be the same — all QSGMII or SGMII.

2.2 Block Diagram

The following illustration shows the primary functional blocks of the VSC8574-01 device.

Figure 4 • **Block Diagram**

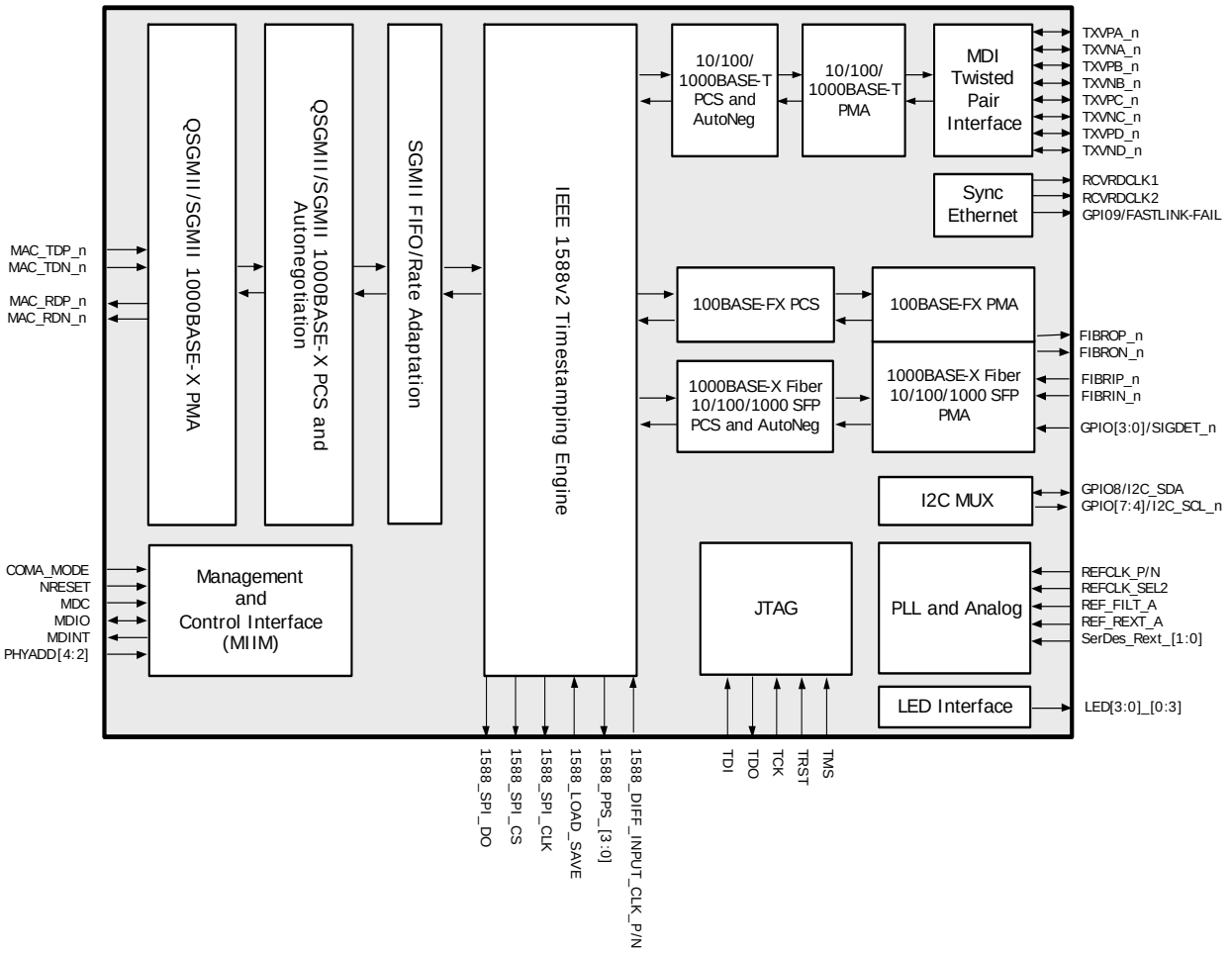

Note: All MAC interfaces must be the same—all QSGMII SGMII, or 1000BASE-X.

3 Functional Descriptions

This section describes the functional aspects of the VSC8574-01 device, including available configurations, operational features, and testing functionality. It also defines the device setup parameters that configure the device for a particular application.

3.1 Operating Modes

The following table lists the operating modes of the VSC8574-01 device.

Table 1 • **Operating Modes**

Operating Mode	Supported Media	Notes
QSGMII/SGMII MAC-to-1000BASE-X Link Partner	1000BASE-X	See Figure 5, page 7.
QSGMII/SGMII MAC-to-100BASE-FX Link Partner	100BASE-FX	See Figure 7, page 8.
QSGMII/SGMII MAC-to-AMS and 1000BASE-X SerDes	1000BASE-X, 10/100/1000BASE-T	See Figure 8, page 9.
QSGMII/SGMII MAC-to-AMS and 100BASE-FX SerDes	100BASE-FX, 10/100/1000BASE-T	See Figure 9, page 10.
QSGMII/SGMII MAC-to-AMS and Protocol Transfer mode	SFP/Fiber Protocol Transfer mode (10/100/1000BASE-T Cu SFP), 10/100/1000BASE-T	See Figure 10, page 11.
QSGMII/SGMII MAC-to-Cat5 Link Partner	10/100/1000BASE-T	See Figure 11, page 12.
QSGMII/SGMII MAC-to-Protocol Transfer mode	SFP/Fiber Protocol Transfer mode (10/100/1000BASE-T Cu SFP)	See Figure 12, page 12.
1000BASE-X MAC-to-Cat5 Link Partner	1000BASE-T only	See Figure 13, page 13.

Note: All MAC interfaces must be the same — all QSGMII or SGMII.

3.1.1 QSGMII/SGMII MAC-to-1000BASE-X Link Partner

The following illustrations and sections show the register settings used to configure a QSGMII/SGMII MAC-to-1000BASE-X link partner.

Figure 5 • **SGMII MAC-to-1000BASE-X Link Partner**

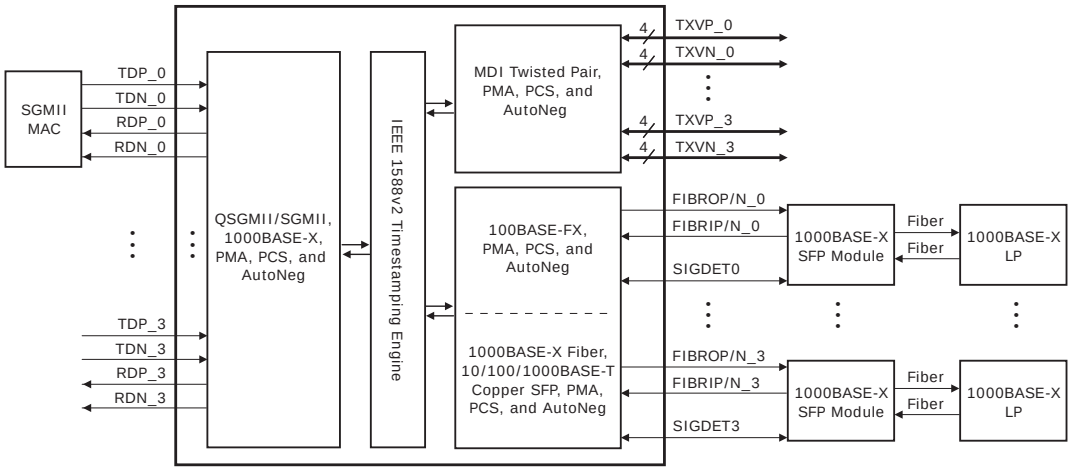

3.1.1.1 MAC interface SGMII

Use the following settings to configure the SGMII MAC interface.

- Set register 19G bits 15:14 = 00.
- Set register 23 (main register) bit 12 = 0.
- Set register 18G = 0x80F0. For more information, see Table 82, page 120.

Figure 6 • **QSGMII MAC-to-1000BASE-X Link Partner**

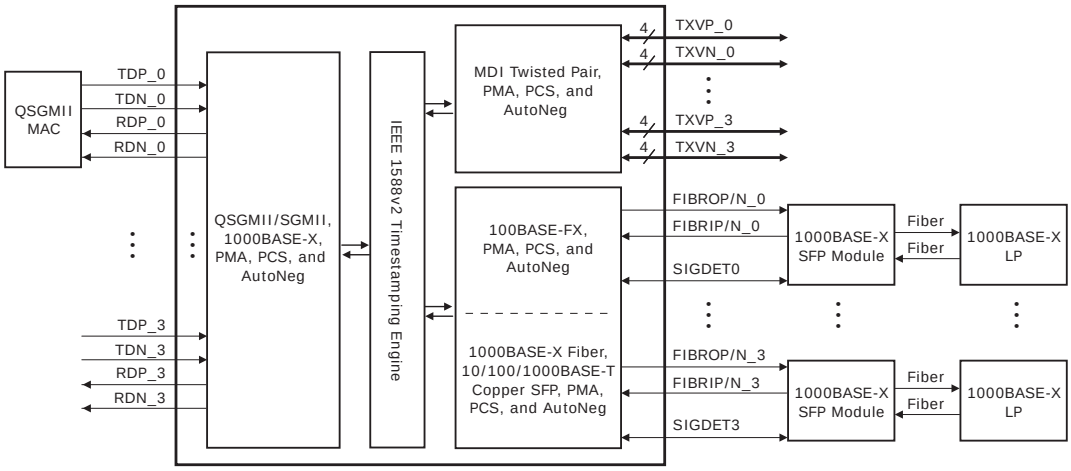

3.1.1.2 MAC interface QSGMII

Use the following settings to configure the QSGMII MAC interface.

- Set register 19G bits 15:14 = 01.
- Set register 23 (main register) bit 12 = 0.
- Set register 18G = 0x80F0. For more information, see Table 82, page 120.

3.1.1.3 Media interface 1000BASE-X SFP Fiber (1000BASE-X Link Partner)

Use the following settings to configure the 1000BASE-X SFP fiber media interface.

- Set register 23 bits 10:8 = 010.
- Set register 0 bit 12 = 1 (enable autonegotiation).
- Set register 18G = 0x8FC1. For more information, see Table 82, page 120.

The F in 0x8FC1 identifies the port. To exclude a port from the configuration, set its bit to 0. For example, the configuration of port 0 and port 1 to 1000BASE-X is 0011 or 3, making the bit setting 0x83C1.

Note: Whenever there is a mode change a software reset (register 0 bit 15) is required to make the mode change effective. This register is cleared when read.

3.1.2 QSGMII/SGMII MAC-to-100BASE-FX Link Partner

The following illustration and sections show the register settings used to configure a QSGMII/SGMII MAC-to-100BASE-FX link partner.

Figure 7 • **QSGMII/SGMII MAC-to-100BASE-FX Link Partner**

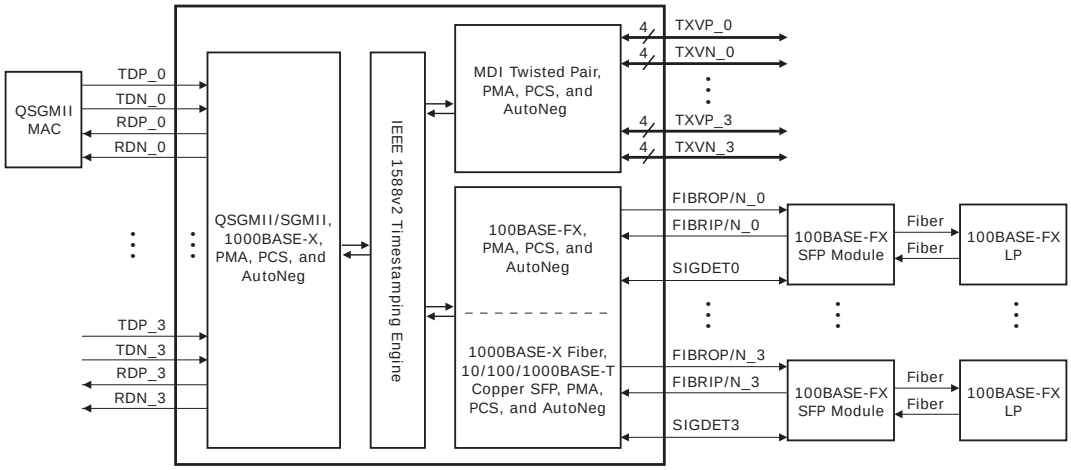

3.1.2.1 MAC interface SGMII

Use the following settings to configure the SGMII MAC interface.

- Set register 19G bits 15:14 = 00.
- Set register 23 (main register) bit 12 = 0.
- Set register 18G = 0x80F0. For more information, see Table 82, page 120.

3.1.2.2 Media interface 100BASE-FX SFP Fiber (100BASE-FX Link Partner)

Use the following settings to configure the 100BASE-FX SFP fiber media interface.

- Set register 23 bits 10:8 = 011.
- Set register 0 bit 12 = 0 (autonegotiation not present in 100BASE-FX PHY).
- Set register 18G = 0x8FD1. For more information, see Table 82, page 120.

For QSGMII only port 0 is used.

Note: Whenever there is a mode change a software reset (register 0 bit 15) is required to make the mode change effective. This register is cleared when read.

3.1.3 QSGMII/SGMII MAC-to-AMS and 1000BASE-X Media SerDes

The following illustration and sections show the register settings used to configure a QSGMII/SGMII MAC-to-AMS and 1000BASE-X media SerDes.

Figure 8 • **QSGMII/SGMII MAC-to-AMS and 1000BASE-X Media SerDes**

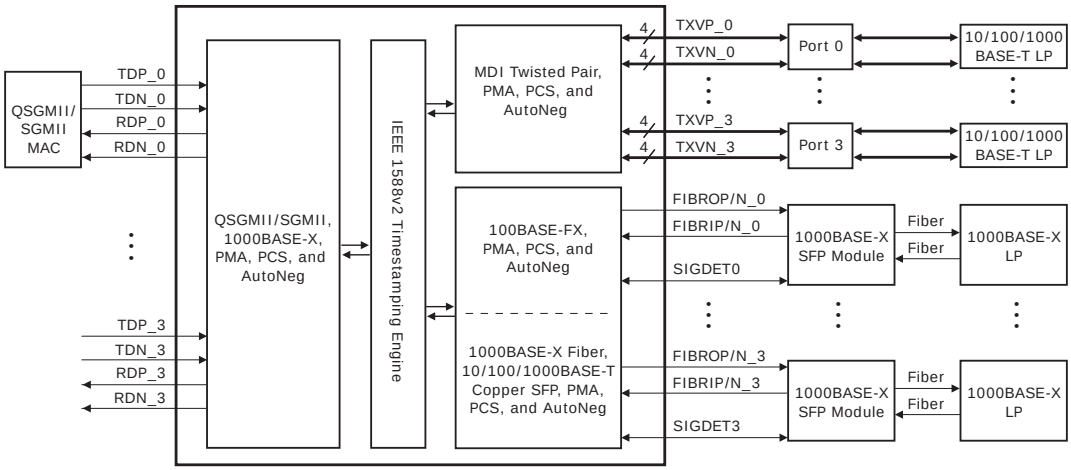

3.1.3.1 MAC interface SGMII

Use the following settings to configure the SGMII MAC interface.

- Set register 19G bits 15:14 = 00.
- Set register 23 (main register) bit 12 = 0.
- Set register 18G = 0x80F0. For more information, see Table 82, page 120.

3.1.3.2 Media interface 1000BASE-X SFP Fiber (1000BASE-X Link Partner)

Use the following settings to configure the 1000BASE-X SFP fiber media interface.

- Set register 23 bits 10:8 = 010.
- Set register 0 bit 12 = 1 (enable autonegotiation).

3.1.3.3 AMS Preference Setup

Use the following settings for the AMS preferences setup.

- Set register 23 bit 10 = 1 (enable AMS).
- Set register 23 bit 11 to the port preferences.

The media selected by AMS can be read from register 20E1 bits 7:6. For more information, see Table 4, page 20.

For QSGMII only port 0 is used.

Note: Whenever there is a mode change a software reset (register 0 bit 15) is required to make the mode change effective. This register is cleared when read.

3.1.4 QSGMII/SGMII MAC-to-AMS and 100BASE-FX Media SerDes

The following illustration and sections show the register settings used to configure a QSGMII/SGMII MAC-to-AMS and 100BASE-FX media SerDes.

Figure 9 • **QSGMII/SGMII MAC-to-AMS and 100BASE-FX Media SerDes**

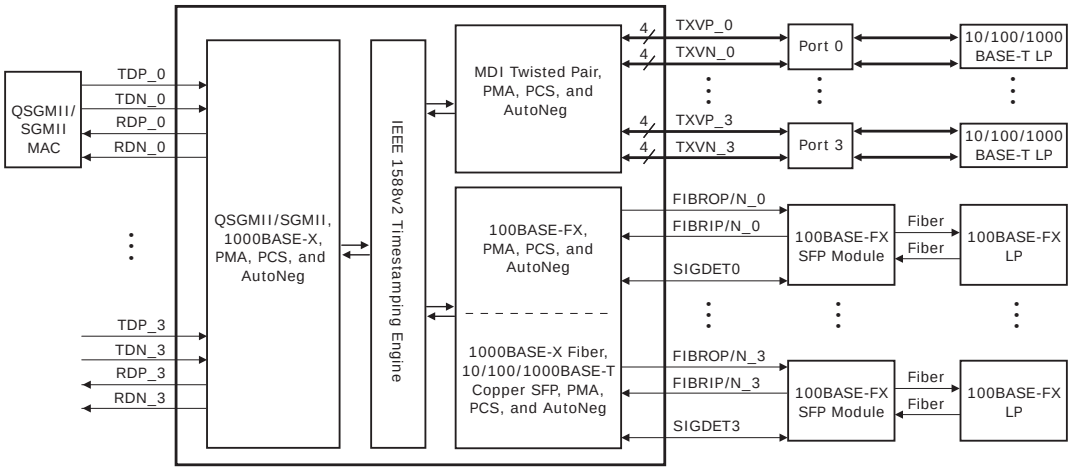

3.1.4.1 MAC interface SGMII

Use the following settings to configure the SGMII MAC interface.

- Set register 19G bits 15:14 = 00.
- Set register 23 (main register) bit 12 = 0.
- Set register 18G = 0x80F0. For more information, see Table 82, page 120.

3.1.4.2 Media interface 100BASE-FX SFP Fiber (100BASE-FX Link Partner)

Use the following settings to configure the 100BASE-FX SFP fiber media interface.

- Set register 23 bits 10:8 = 011.
- Set register 0 bit 12 = 1 (enable autonegotiation).

3.1.4.3 AMS Preference Setup

Use the following settings for the AMS preferences setup.

- Set register 23 bit 10 = 1 (enable AMS).
- Set register 23 bit 11 to the port preferences.

The media selected by AMS can be read from register 20E1 bits 7;6. For more information, see Table 4, page 20.

For QSGMII only port 0 is used.

Note: Whenever there is a mode change a software reset (register 0 bit 15) is required to make the mode change effective. This register is cleared when read.

3.1.5 QSGMII/SGMII MAC-to-AMS and Protocol Transfer Mode

The following illustration and sections show the register settings used to configure a QSGMII/SGMII MAC-to-AMS and Protocol Transfer mode.

Figure 10 • **QSGMII/SGMII MAC-to-AMS and Protocol Transfer Mode**

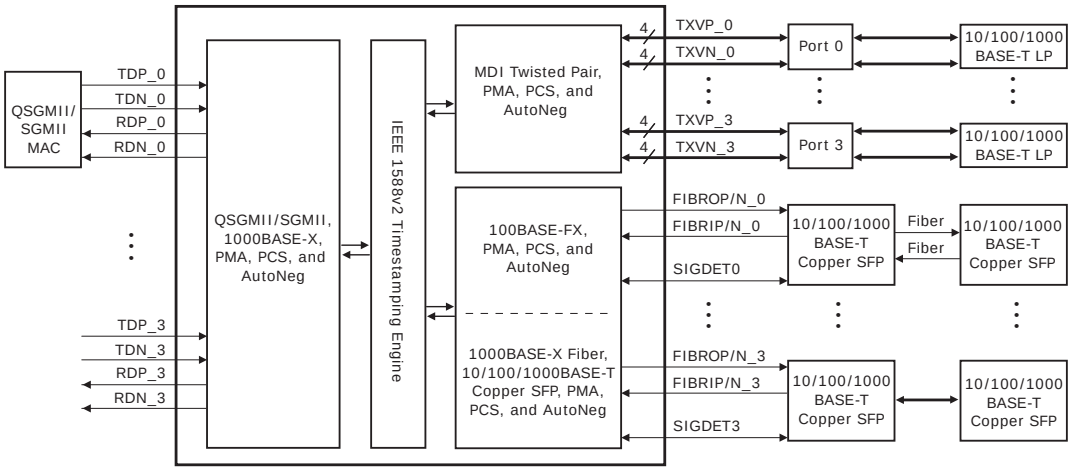

3.1.5.1 MAC interface SGMII

Use the following settings to configure the SGMII MAC interface.

- Set register 19G bits 15:14 = 00.
- Set register 23 (main register) bit 12 = 0.
- Set register 18G = 0x80F0. For more information, see Table 82, page 120.

3.1.5.2 Media interface 10/100/1000BASE-T Cu-SFP

Use the following settings to configure the fiber/SFP media interface for protocol transfer mode.

- Set register 23 bits 10:8 = 001.
- Set register 0 bit 12 = 1 (enable autonegotiation).

3.1.5.3 AMS Preference Setup

Use the following settings for the AMS preferences setup.

- Set register 23 bit 10 = 1 (enable AMS).
- Set register 23 bit 11 to the port preferences.

The media selected by AMS can be read from register 20E1 bits 7;6. For more information, see Table 4, page 20.

For QSGMII only port 0 is used.

Note: Whenever there is a mode change a software reset (register 0 bit 15) is required to make the mode change effective. This register is cleared when read.

3.1.6 QSGMII/SGMII MAC-to-Cat5 Link Partner

The following illustration and sections show the register settings used to configure a QSGMII/SGMII MAC-to-Cat5 link partner.

Figure 11 • **QSGMII/SGMII MAC-to-Cat5 Link Partner**

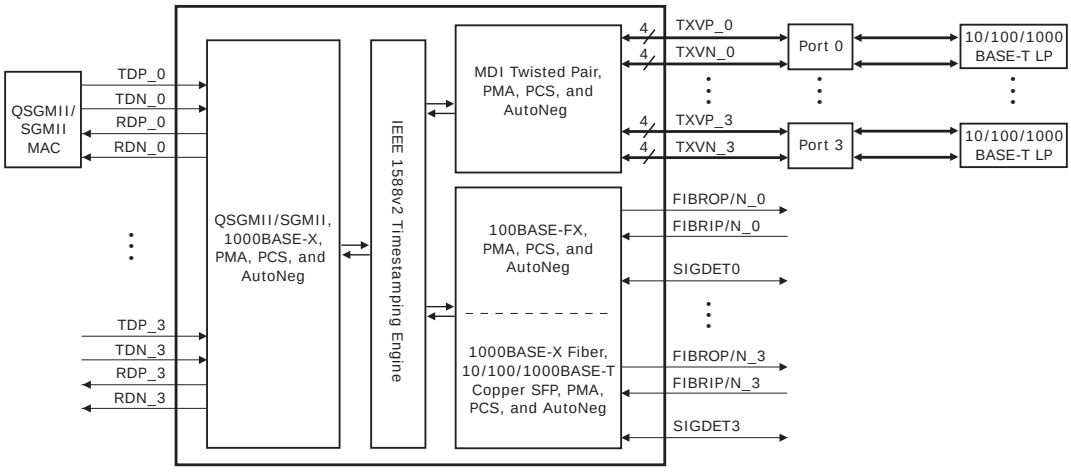

3.1.6.1 MAC interface SGMII

Use the following settings to configure the SGMII MAC interface.

- Set register 19G bits 15:14 = 00.
- Set register 23 (main register) bit 12 = 0.
- Set register 18G = 0x80F0. For more information, see Table 82, page 120.

For QSGMII only port 0 is used.

Note: Whenever there is a mode change a software reset (register 0 bit 15) is required to make the mode change effective. This register is cleared when read.

3.1.7 QSGMII/SGMII MAC-to-Protocol Transfer Mode

The following illustration and sections show the register settings used to configure a QSGMII/SGMII MAC-to-Protocol Transfer mode.

Figure 12 • **QSGMII/SGMII MAC-to-Protocol Transfer Mode**

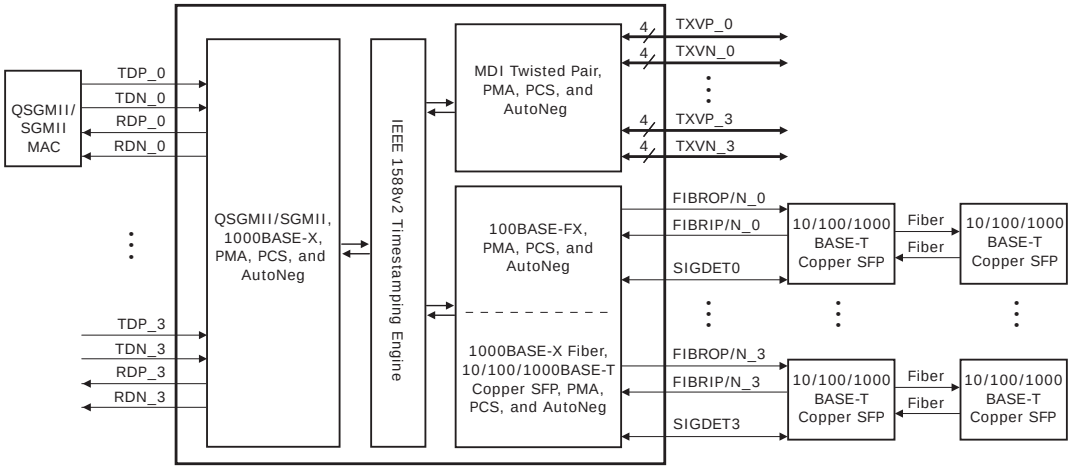

3.1.7.1 MAC interface SGMII

Use the following settings to configure the SGMII MAC interface.

- Set register 19G bits 15:14 = 00.
- Set register 23 (main register) bit 12 = 0.
- Set register 18G = 0x80F0. For more information, see Table 82, page 120.

3.1.7.2 Media interface 10/100/1000BASE-T Cu-SFP

Use the following settings to configure the fiber/SFP media interface for protocol transfer mode.

- Set register 23 bits 10:8 = 001.
- Set register 0 bit 12 = 1 (enable autonegotiation).

For QSGMII only port 0 is used.

Note: Whenever there is a mode change a software reset (register 0 bit 15) is required to make the mode change effective. This register is cleared when read.

3.1.8 1000BASE-X MAC-to-Cat5 Link Partner

The following illustration and sections show the register settings used to configure a 1000BASE-X MAC-to-Cat5 Link Partner.

Figure 13 • **1000BASE-X MAC-to-Cat5 Link Partner**

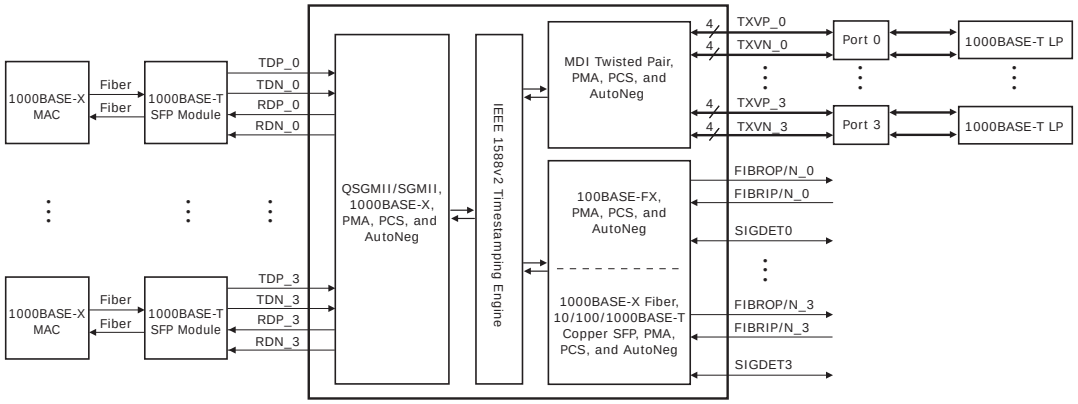

In this mode the device provides data throughput of 1000 Mbps only.

3.1.8.1 MAC interface

Use the following settings to configure the MAC interface.

- Set register 19G bits 15:14 = 00.
- Set register 23 (main register) bit 12 = 1.

3.1.8.2 Clause 37 MAC Autonegotiation

For clause 37 MAC autonegotiation, set register 16E3 bit 7 = 1.

Note: Whenever there is a mode change a software reset (register 0 bit 15) is required to make the mode change effective. This register is cleared when read.

3.2 SerDes MAC Interface

The VSC8574-01 SerDes MAC interface performs data serialization and deserialization functions using an integrated SerDes block. The interface operates in 1000BASE-X compliant mode, QSGMII mode, or SGMII mode. The SerDes and enhanced SerDes blocks have the termination resistor integrated into the device. The SerDes block also has the AC decoupling capacitors integrated in the receive path. Integrated AC decoupling is not supported in the enhanced SerDes block (QSGMII SerDes). Register 19G is a global register and only needs to be set once to configure the device. The other register bits are configured on a per-port basis and the operation either needs to be repeated for each port, or a broadcast write needs to be used by setting register 22, bit 0 to configure all the ports simultaneously.

3.2.1 SerDes MAC

When connected to a SerDes MAC compliant to 1000BASE-X, the VSC8574-01 device provides data throughput at a rate of 1000 Mbps only; 10 Mbps and 100 Mbps rates are not supported. To configure the device for SerDes MAC mode, set register 19G, bits 15:14 = 0, and register 23, bit 12 = 1. The device also supports 1000BASE-X Clause 37 MAC-side autonegotiation and is enabled through register 16E3,

bit 7. To configure the rest of the device for 1000 Mbps operation, select 1000BASE-T only by disabling the 10BASE-T/100BASE-TX advertisements in register 4.

Figure 14 • **SerDes MAC Interface**

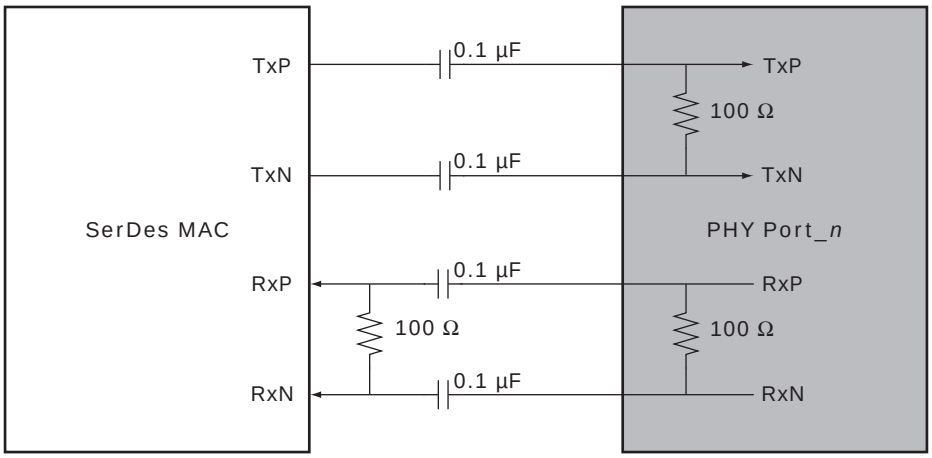

3.2.2 SGMII MAC

When configured to detect and switch between 10BASE-T, 100BASE-T, and 1000BASE-T data rates, the VSC8574-01 device can be connected to an SGMII-compatible MAC. To configure the device for SGMII MAC mode, set register 19G, bits 15:14 = 00 and register 23, bit 12 = 0. In addition, set register 18G as desired. This device also supports SGMII MAC-side autonegotiation and is enabled through register 16E3, bit 7.

Figure 15 • **SGMII MAC Interface**

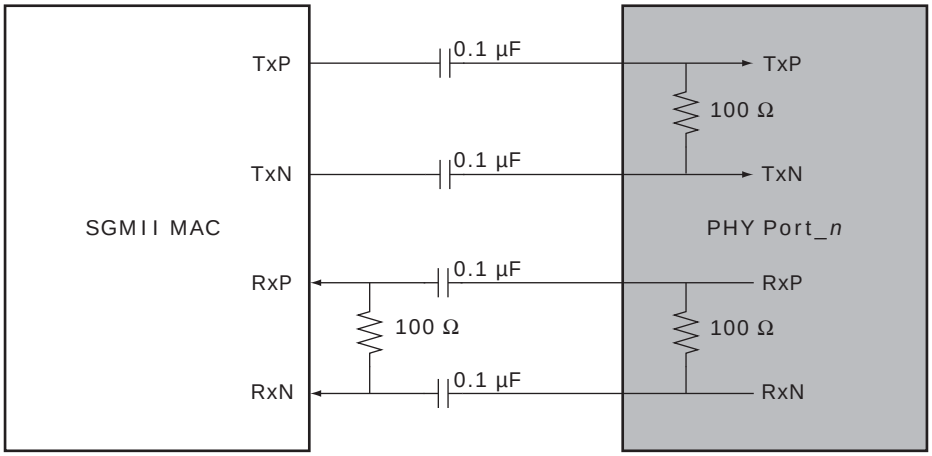

3.2.3 QSGMII MAC

The VSC8574-01 device supports a QSGMII MAC to convey four ports of network data and port speed between 10BASE-T, 100BASE-T, and 1000BASE-T data rates and operates in both half-duplex and full-duplex at all port speeds. The MAC interface protocol for each port within QSGMII can be either 1000BASE-X or SGMII, if the QSGMII MAC that the VSC8574-01 is connecting to supports this functionality. To configure the device for QSGMII MAC mode, set register 19G, bits 15:14 = 01. In addition, set register 18G as desired. The device also supports SGMII MAC-side autonegotiation on each individual port and is enabled through register 16E3, bit 7, of that port.

Figure 16 • **QSGMII MAC Interface**

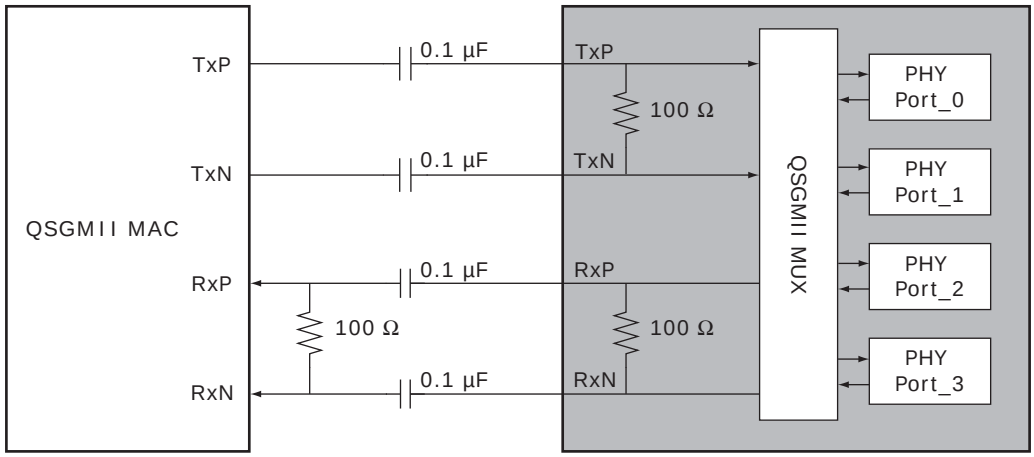

3.3 SerDes Media Interface

The VSC8574-01 device SerDes media interface performs data serialization and deserialization functions using an integrated SerDes block in the SerDes media interface. The interface operates at 1.25 Gbps speed, providing full-duplex and half-duplex for 10/100/1000 Mbps bandwidth that can connect directly to 100BASE-FX/1000BASE-X-compliant optical devices as well as to 10/100/1000BASE-T copper SFP devices. The interface also provides support for unidirectional transport as defined in IEEE 802.3-2008, Clause 66. The SerDes interface has the following operating modes:

- QSGMII/SGMII to 1000BASE-X
- QSGMII/SGMII to 100BASE-FX
- QSGMII/SGMII to SGMII/1000BASE-X protocol transfer

The SerDes media block has the termination resistor integrated into the device. It also has the AC decoupling capacitors integrated in the receive path.

A software reset through register 0, bit 15 is required when changing operating modes between 100BASE-FX and 1000BASE-X.

3.3.1 QSGMII/SGMII to 1000BASE-X

The 1000BASE-X SerDes media in QSGMII/SGMII mode supports IEEE 802.3 Clause 36 and Clause 37, which describe 1000BASE-X fiber autonegotiation. In this mode, control and status of the SerDes media is displayed in the VSC8574-01 device registers 0 through 15 in a manner similar to what is described in IEEE 802.3 Clause 28. In this mode, connected copper SFPs can only operate at 1000BASE-T speed. A link in this mode is established using autonegotiation (enabled or disabled) between the PHY and the link partner. To configure the PHY in this mode, set register 23, bits 10:8 = 010. To configure 1000BASE-X autonegotiation for this mode, set register 0, bit 12. Setting this mode and configurations can be performed individually on each of the four ports. Ethernet packet generator (EPG), cyclical redundancy check (CRC) counters, and loopback modes are supported in 1000BASE-X mode.

3.3.2 QSGMII/SGMII to 100BASE-FX

The VSC8574-01 supports 100BASE-FX communication speed for connecting to fiber modules such as GBICs and SFPs. This capability is facilitated by using the connections on the SerDes pins when connected to a MAC through QSGMII/SGMII. Ethernet packet generator (EPG), cyclical redundancy check (CRC) counters, and loopback modes are supported in the 100BASE-FX mode. Setting this mode and configurations can be performed individually on each of the four ports. To configure the PHY in this mode, set register 23, bits 10:8 = 011.

3.3.3 QSGMII to SGMII Protocol Conversion

QSGMII to SGMII (protocol transfer) mode is a feature that links a fiber module or triple speed 10/100/1000-T copper SFP to the QSGMII MAC through the VSC8574-01 device. SGMII can be converted to QSGMII with protocol conversion using this mode.

To configure the PHY in this mode, set register 23, bits 10:8 = 001. To establish the link, assert the relevant signal-detect pin.

All relevant LED modes are supported except for collision, duplex, and autonegotiation fault. The triple-speed copper SFP's link status and data type plugged into the port can be indicated by the PHY's LEDs. Setting this particular mode and configuration can be performed individually on each of the four ports within a QSGMII grouping.

3.3.4 Unidirectional Transport for Fiber Media

The VSC8574-01 device supports IEEE 802.3ah for unidirectional transport across its 1000BASE-X and 100BASE-FX fiber media. This feature enables transmission across fiber media, regardless of whether the PHY has determined that a valid link has been established (register 1, bit 2). The only valid operating modes for unidirectional fiber mode are 100BASE-FX or 1000BASE-X fiber media.

To enable this feature, set register 0, bit 5 to 1. For status of the unidirectional ability, read register 1, bit 7.

Note: Automatic media sensing does not work with this feature. In addition, because unidirectional fiber media must have autonegotiation disabled, SGMII autonegotiation must also be disabled (register 16E3, bit 7 = 0).

3.4 PHY Addressing and Port Mapping

This section contains information about PHY addressing and port mapping.

3.4.1 PHY Addressing

The VSC8574-01 includes three external PHY address pins, PHYADD[4:2], to allow control of multiple PHY devices on a system board sharing a common management bus. These pins set the most significant bits of the PHY address port map. The lower two bits of the address for each port are derived from the physical address of the port (0 to 3) and the setting of the PHY address reversal bit in register 20E1, bit 9.

3.4.2 SerDes Port Mapping

The VSC8574-01 includes seven 1.25 GHz SerDes macros and one 5 GHz enhanced SerDes macro. Three of the seven SerDes macros are configured as SGMII MAC interfaces and the remaining four are configured as 1000BASE-X/100BASE-FX SerDes media interfaces. The enhanced SerDes macro can be configured as either a QSGMII MAC interface or the fourth SGMII MAC interface. The following table shows the different operating modes based on the settings of register 19G, bits 15:14.

Table 2 • **MAC Interface Mode Mapping**

19G[15:14]	Operating Mode
00	SGMII
01	QSGMII
10	Reserved
11	Reserved

3.5 Cat5 Twisted Pair Media Interface

The VSC8574-01 twisted pair interface is compliant with IEEE 802.3-2008 and the IEEE 802.3az-2010 standard for energy efficient Ethernet.

3.5.1 Voltage Mode Line Driver

Unlike many other gigabit PHYs, the VSC8574-01 uses a patented voltage mode line driver that allows it to fully integrate the series termination resistors, which are required to connect the PHY's Cat5 interface to an external 1:1 transformer. Also, the interface does not require the user to place an external voltage on the center tap of the magnetic. The following illustration shows the connections.

Figure 17 • **Cat5 Media Interface**

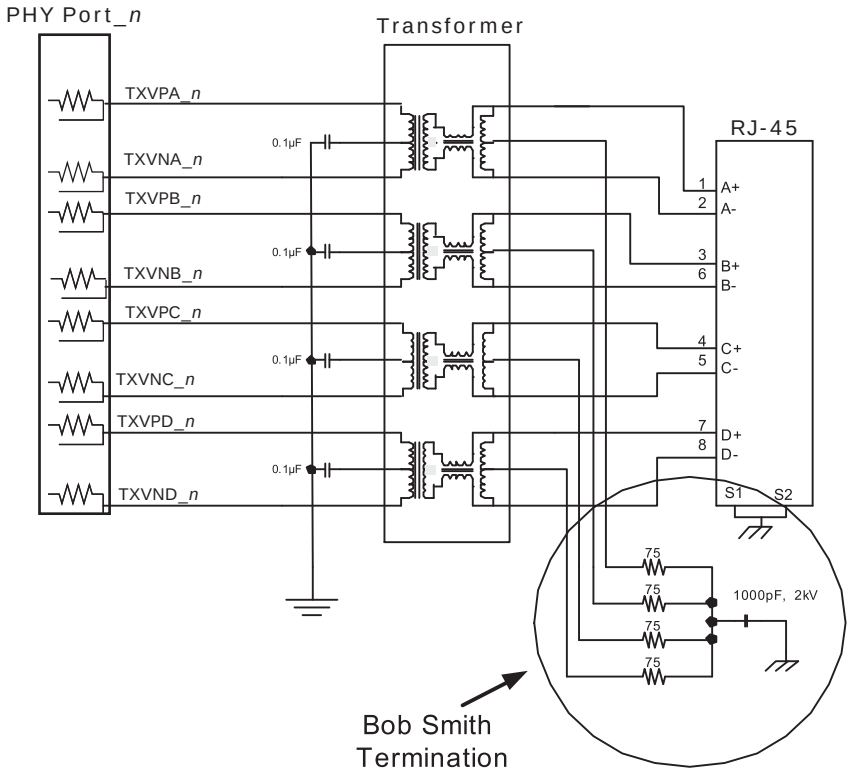

3.5.2 Cat5 Autonegotiation and Parallel Detection

The VSC8574-01 supports twisted pair autonegotiation, as defined by IEEE 802.3-2008 Clause 28 and IEEE 802.3az-2010. The autonegotiation process evaluates the advertised capabilities of the local PHY and its link partner to determine the best possible operating mode. In particular, autonegotiation can determine speed, duplex configuration, and master or slave operating modes for 1000BASE-TX. Autonegotiation also enables a connected MAC to communicate with its link partner MAC through the VSC8574-01 using optional next pages, which set attributes that may not otherwise be defined by the IEEE standard.

If the Category 5 (Cat5) link partner does not support autonegotiation, the VSC8574-01 automatically uses parallel detection to select the appropriate link speed.

Autonegotiation is disabled by clearing register 0, bit 12. When autonegotiation is disabled, the state of register bits 0.6, 0.13, and 0.8 determine the device operating speed and duplex mode.

Note: While 10BASE-T and 100BASE-TX do not require autonegotiation, Clause 40 has defined 1000BASE-T to require autonegotiation.

3.5.3 Automatic Crossover and Polarity Detection

For trouble-free configuration and management of Ethernet links, the VSC8574-01 includes a robust automatic crossover detection feature for all three speeds on the twisted pair interface (10BASE-T, 100BASE-T, and 1000BASE T). Known as HP Auto-MDIX, the function is fully compliant with Clause 40 of IEEE 802.3-2008.

Additionally, the device detects and corrects polarity errors on all MDI pairs — a useful capability that exceeds the requirements of the standard.

Both HP Auto-MDIX detection and polarity correction are enabled in the device by default. Default settings can be changed using device register bits 18.5:4. Status bits for each of these functions are located in register 28.

Note: The VSC8574-01 can be configured to perform HP Auto-MDIX, even when autonegotiation is disabled and the link is forced into 10/100 speeds. To enable this feature, set register 18.7 to 0. To use the feature, also set register 0.12 to 0.

The HP Auto-MDIX algorithm successfully detects, corrects, and operates with any of the MDI wiring pair combinations listed in the following table, which shows that twisted pair A (of four twisted paris A, B, C, and D) is connected to the RJ45 connector 1,2 in normal MDI mode.

Table 3 • **Supported MDI Pair Combinations**

RJ45 Connections				
1, 2	**3, 6**	**4, 5**	**7, 8**	**Mode**
A	B	C	D	Normal MDI
B	A	D	C	Normal MDI-X
A	B	D	C	Normal MDI with pair swap on C and D pair
B	A	C	D	Normal MDI-X with pair swap on C and D pair

3.5.4 Manual HP Auto-MDIX Setting

As an alternative to HP Auto-MDIX detection, the PHY can be forced to be MDI or MDI-X using register 19E1, bits 3:2. Setting these bits to 10 forces MDI and setting 11 forces MDI-X. Leaving the bits 00 enables the HP Auto-MDIX setting to be based on register 18, bits 7 and 5.

3.5.5 Link Speed Downshift

For operation in cabling environments that are incompatible with 1000BASE-T, the VSC8574-01 provides an automatic link speed downshift option. When enabled, the device automatically changes its 1000BASE-T autonegotiation advertisement to the next slower speed after a set number of failed attempts at 1000BASE-T. No reset is required to get out of this state when a subsequent link partner with 1000BASE-T support is connected. This feature is useful in setting up in networks using older cable installations that include only pairs A and B, and not pairs C and D.

To configure and monitor link speed downshifting, set register 20E1, bits 4:1. For more information, see Table 52, page 101.

3.5.6 Energy Efficient Ethernet

The VSC8574-01 supports the IEEE 802.3az-2010 Energy Efficient Ethernet standard. This standard provides a method for reducing power consumption on an Ethernet link during times of low utilization. It uses low power idles (LPI) to achieve this objective.

Figure 18 • **Low Power Idle Operation**

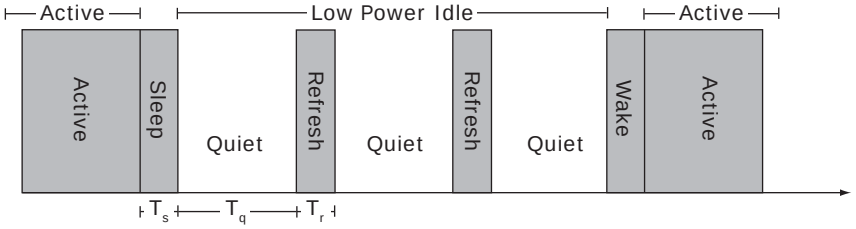

Using LPI, the usage model for the link is to transmit data as fast as possible and then return to a low power idle state. Energy is saved on the link by cycling between active and low power idle states. During

LPI, power is reduced by turning off unused circuits and using this method, energy use scales with bandwidth utilization.

The VSC8574-01 uses LPI to optimize power dissipation in 100BASE-TX and 1000BASE-T modes of operation. In addition, the IEEE 802.3az-2010 standard defines a 10BASE-Te mode that reduces transmit signal amplitude from 5 V peak-to-peak to approximately 3.3 V peak-to-peak. This mode reduces power consumption in 10 Mbps link speed and fully interoperates with legacy 10BASE-T compliant PHYs over 100 m Cat5 cable or better.

To configure the VSC8574-01 in 10BASE-Te mode, set register 17E2.15 to 1 for each port. Additional energy efficient Ethernet features are controlled through Clause 45 registers. For more information, see Design Considerations, page 394.

3.5.7 Ring Resiliency

Ring resiliency changes the timing reference between the master and slave PHYs without altering the master/slave configuration in 1000BASE-T mode. The master PHY transmitter sends data based on the local clock and initiates timing recovery in the receiver. The slave PHY instructs node to switch the local timing reference to the recovered clock from other PHYs in the box, freezes timing recovery, and locks clock frequency for the transmitter. The master PHY makes a smooth transition to transmission from local clock to recovered clock after timing lock is achieved.

Ring resiliency can be used in synchronous Ethernet systems, because the local clocks in each node are synchronized to a grandmaster clock.

Note: For ring resiliency to successfully exchange master/slave timing over 1000BASE-T, the link partner must also support ring resiliency.

3.6 Automatic Media Sense Interface Mode

Automatic media sense (AMS) mode automatically sets the media interface to Cat5 mode or SerDes mode. The active media mode chosen is based on the automatic media sense preferences set in the device register 23, bit 11. The following illustration shows a block diagram of AMS functionality on ports 0 through 3 of the VSC8574-01 device.

Figure 19 • **Automatic Media Sense Block Diagram**

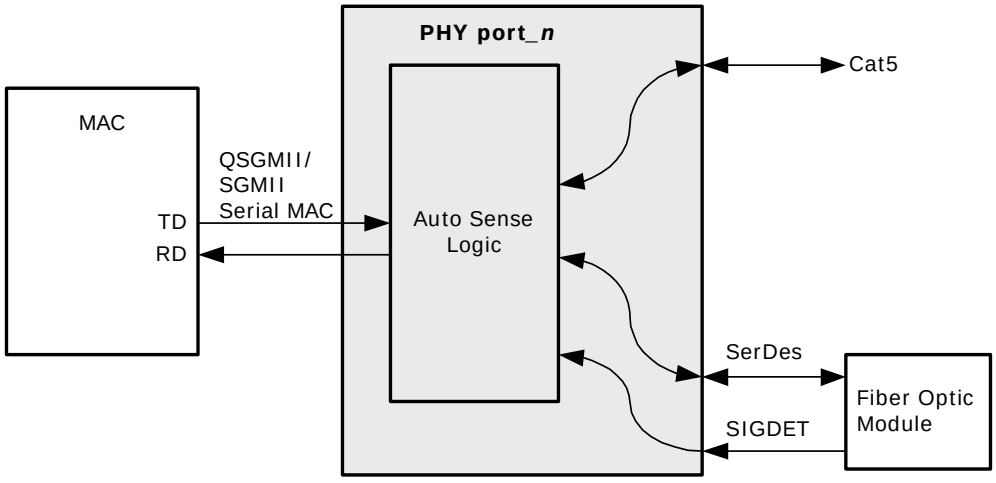

When both the SerDes and Cat5 media interfaces attempt to establish a link, the preferred media interface overrides a linkup of the nonpreferred media interface. For example, if the preference is set for SerDes mode and Cat5 media establishes a link, Cat5 becomes the active media interface. However, after the SerDes media interface establishes a link, the Cat5 interface drops its link because the preference was set for SerDes mode. In this scenario, the SerDes preference determines the active media source until the SerDes link is lost. Also, Cat5 media cannot link up unless there is no SerDes

media link established. The following table shows the possible link conditions based on preference settings.

Table 4 • **AMS Media Preferences**

Preference Setting	Cat5 Linked, Fiber Not Linked	SerDes Linked, Cat5 Not Linked	Cat5 Linked, SerDes Attempts to Link	SerDes Linked, Cat5 Attempts to Link	Both Cat5 and SerDes Attempt to Link
SerDes	Cat5	SerDes	SerDes	SerDes	SerDes
Cat5	Cat5	SerDes	Cat5	Cat5	Cat5

The status of the media mode selected by the AMS can be read from device register 20E1, bits 7:6. It indicates whether copper media, SerDes media, or no media is selected. Each PHY has four automatic media sense modes. The difference between the modes is based on the SerDes media modes:

- SGMII or QSGMII MAC to AMS and 1000BASE-X SerDes
- SGMII or QSGMII MAC to AMS and 100BASE-FX SerDes
- SGMII or QSGMII MAC to AMS and SGMII (protocol transfer)

For more information about SerDes media mode functionality with AMS enabled, see SerDes Media Interface, page 15.

3.7 Reference Clock

The device reference clock supports both 25 MHz and 125 MHz clock signals. The 1588 differential input clock supports frequencies of 125 MHz to 250 MHz. Both reference clocks can be either differential or single-ended. If differential, they must be capacitively coupled and LVDS compatible.

3.7.1 Configuring the Reference Clock

The REFCLK_SEL2 pin configures the reference clock speed. The following table shows the functionality and associated reference clock frequency.

Table 5 • **REFCLK Frequency Selection**

REFCLK_SEL2	Frequency
0	25 MHz
1	125 MHz

3.7.2 Single-Ended REFCLK Input

To use a single-ended reference clock, an external resistor network is required. The purpose of the network is to limit the amplitude and to adjust the center of the swing. The configurations for a single-ended REFCLK, with the clock centered at 1 V and a 500 mV peak-to-peak swing, are shown in the following illustrations.

Figure 20 • **2.5 V CMOS Single-Ended REFCLK Input Resistor Network**

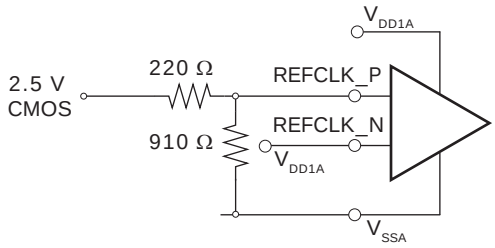

Figure 21 • **3.3 V CMOS Single-Ended REFCLK Input Resistor Network**

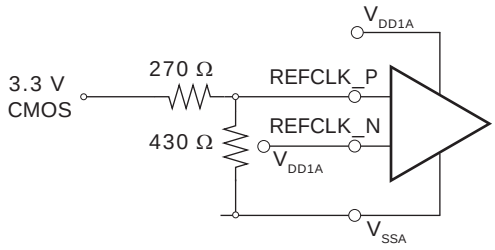

Figure 22 • **5 V CMOS Single-Ended REFCLK Input Resistor Network**

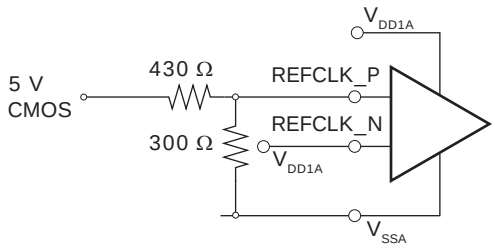

Note: A single-ended 25 MHz reference clock is not guaranteed to meet requirements for QSGMII MAC operation.

3.7.3 Differential REFCLK Input

AC coupling is required when using a differential REFCLK. Differential clocks must be capacitively coupled and LVDS compatible. The following illustration shows the configuration.

Figure 23 • **AC Coupling for REFCLK Input**

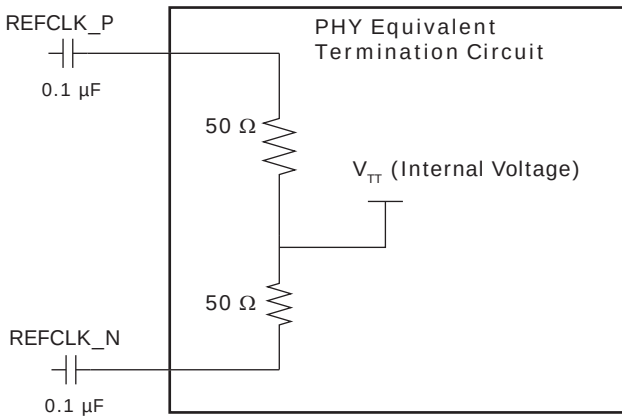

3.8 1588 Reference Clock

The device 1588 reference clock input supports a continuum of frequencies between 125 MHz and 250 MHz. Both single-ended and differential clocks are supported, but differential clocks are preferred for better performance. If differential, they must be capacitively coupled and compatible. For more information about configuring the clock for single-ended operation, see Reference Clock, page 20.

3.9 Ethernet Inline Powered Devices

The VSC8574-01 can detect legacy inline powered devices in Ethernet network applications. Inline powered detection capability is useful in systems that enable IP phones and other devices (such as wireless access points) to receive power directly from their Ethernet cable, similar to office digital phones receiving power from a private branch exchange (PBX) office switch over telephone cabling. This type of setup eliminates the need for an external power supply and enables the inline powered device to remain active during a power outage, assuming that the Ethernet switch is connected to an uninterrupted power supply, battery, back-up power generator, or other uninterruptable power source.

For more information about legacy inline powered device detection, visit the Cisco Web site at www.cisco.com. The following illustration shows an example of an inline powered Ethernet switch application.

Figure 24 • **Inline Powered Ethernet Switch Diagram**

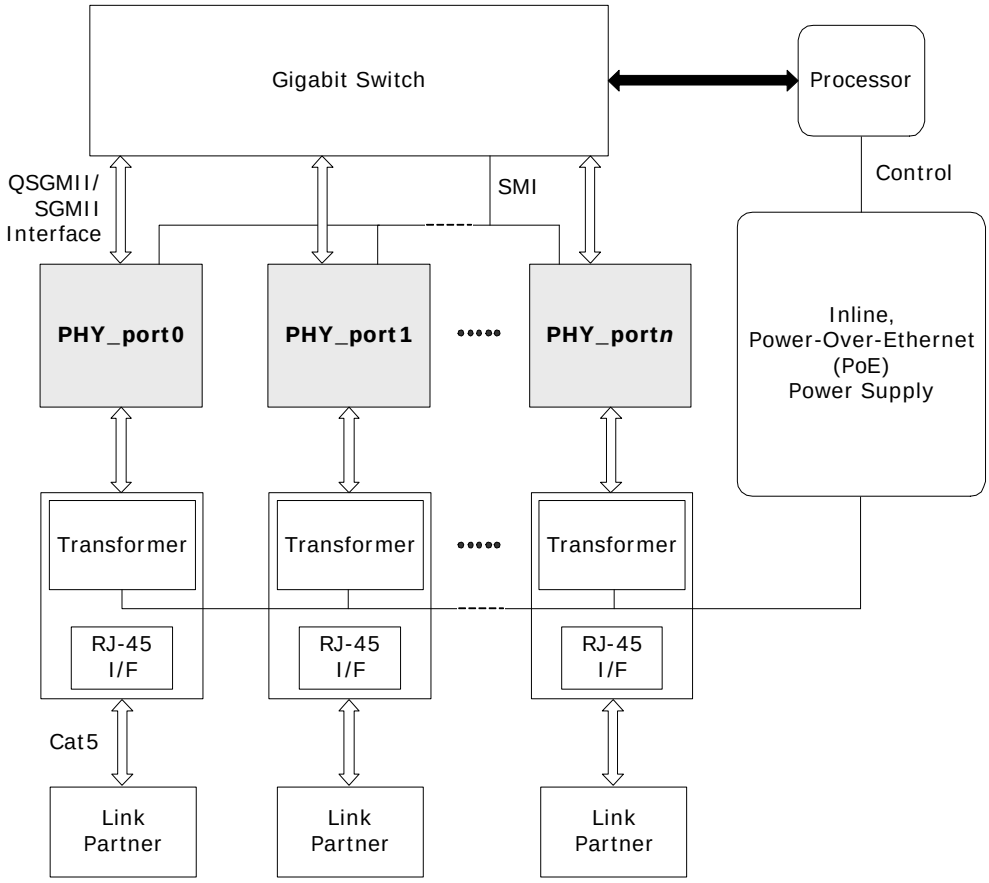

The following procedure describes the process that an Ethernet switch must perform to process inline power requests made by a link partner (LP) that is, in turn, capable of receiving inline power:

1. Enable the inline powered device detection mode on each VSC8574-01 PHY using its serial management interface. Set register bit 23E1.10 to 1.
2. Ensure that the VSC8574-01 autonegotiation enable bit (register 0.12) is also set to 1. In the application, the device sends a special fast link pulse (FLP) signal to the LP. Reading register bit 23E1.9:8 returns 00 during the search for devices that require power over Ethernet (PoE).
3. The VSC8574-01 PHY monitors its inputs for the FLP signal looped back by the LP. An LP capable of receiving PoE loops back the FLP pulses when the LP is in a powered down state. This is reported when VSC8574-01 register bit 23E1.9:8 reads back 01. It can also be verified as an inline power detection interrupt by reading VSC8574-01 register bit 26.9, which should be a 1, and which is subsequently cleared and the interrupt de-asserted after the read. When an LP device does not loop back the FLP after a specific time, VSC8574-01 register bit 23E1.9:8 automatically resets to 10.
4. If the VSC8574-01 PHY reports that the LP requires PoE, the Ethernet switch must enable inline power on this port, externally of the PHY.
5. The PHY automatically disables inline powered device detection when the VSC8574-01 register bits 23E1.9:8 automatically reset to 10, and then automatically changes to its normal autonegotiation process. A link is then autonegotiated and established when the link status bit is set (register bit 1.2 is set to 1).
6. In the event of a link failure (indicated when VSC8574-01 register bit 1.2 reads 0), it is recommended that the inline power be disabled to the inline powered device external to the PHY. The VSC8574-01 PHY disables its normal autonegotiation process and re-enables its inline powered device detection mode.

3.10 IEEE 802.3af PoE Support

The VSC8574-01 device is compatible with designs that are intended for use in systems that supply power to data terminal equipment (DTE) by means of the MDI or twisted pair cable, as described in IEEE 802.3af Clause 33.

3.11 ActiPHY Power Management

In addition to the IEEE-specified power-down control bit (device register bit 0.11), the device also includes an ActiPHY power management mode for each PHY. This mode enables support for power-sensitive applications. It utilizes a signal-detect function that monitors the media interface for the presence of a link to determine when to automatically power-down the PHY. The PHY wakes up at a programmable interval and attempts to wake up the link partner PHY by sending a burst of FLP over copper media.

The ActiPHY power management mode in the VSC8574-01 is enabled on a per-port basis during normal operation at any time by setting register bit 28.6 to 1.

The following operating states are possible when ActiPHY mode is enabled:

- Low power state
- Link partner wake-up state
- Normal operating state (link-up state)

The VSC8574-01 switches between the low power state and LP wake-up state at a programmable rate (the default is two seconds) until signal energy has been detected on the media interface pins. When signal energy is detected, the PHY enters the normal operating state. If the PHY is in its normal operating state and the link fails, the PHY returns to the low power state after the expiration of the link status time-out timer. After reset, the PHY enters the low power state.

When autonegotiation is enabled in the PHY, the ActiPHY state machine operates as described. When autonegotiation is disabled and the link is forced to use 10BASE-T or 100BASE-TX modes while the PHY is in its low power state, the PHY continues to transition between the low power and LP wake-up states until signal energy is detected on the media pins. At that time, the PHY transitions to the normal operating state and stays in that state even when the link is dropped. When autonegotiation is disabled while the PHY is in the normal operation state, the PHY stays in that state when the link is dropped and does not transition back to the low power state.

The following illustration shows the relationship between ActiPHY states and timers.

Figure 25 • **ActiPHY State Diagram**

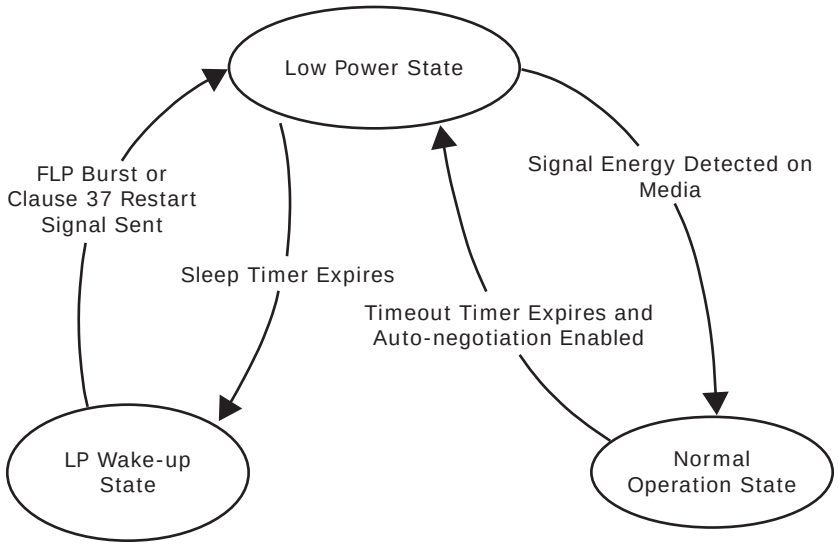

3.11.1 Low Power State

In the low power state, all major digital blocks are powered down. However, the SMI interface (MDC, MDIO, and MDINT) functionality is provided.

In this state, the PHY monitors the media interface pins for signal energy. The PHY comes out of low power state and transitions to the normal operating state when signal energy is detected on the media. This happens when the PHY is connected to one of the following:

- Autonegotiation-capable link partner
- Another PHY in enhanced ActiPHY LP wake-up state

In the absence of signal energy on the media pins, the PHY periodically transitions from low-power state to LP wake-up state, based on the programmable sleep timer (register bits 20E1.14:13). The actual sleep time duration is randomized from –80 ms to 60 ms to avoid two linked PHYs in ActiPHY mode entering a lock-up state during operation.

3.11.2 Link Partner Wake-Up State

In the link partner wake-up state, the PHY attempts to wake up the link partner. Up to three complete FLP bursts are sent on alternating pairs A and B of the Cat5 media for a duration based on the wake-up timer, which is set using register bits 20E1.12:11.

In this state, SMI interface (MDC, MDIO, and MDINT) functionality is provided.

After sending signal energy on the relevant media, the PHY returns to the low power state.

3.11.3 Normal Operating State

In the normal operating state, the PHY establishes a link with a link partner. When the media is unplugged or the link partner is powered down, the PHY waits for the duration of the programmable link status time-out timer, which is set using register bit 28.7 and bit 28.2. It then enters the low power state.

3.12 IEEE 1588 Timestamping Engine

This section provides information about the IEEE 1588 block for the VSC8574-01 device.

3.12.1 IEEE 1588 Block Operation

This section describes the basic operation of the architecture, when configured to work in each of the different IEEE 1588 operation modes. The following illustration shows a block diagram of the IEEE 1588 architecture in the VSC8574-01 device.

Figure 26 • **IEEE 1588 Architecture**

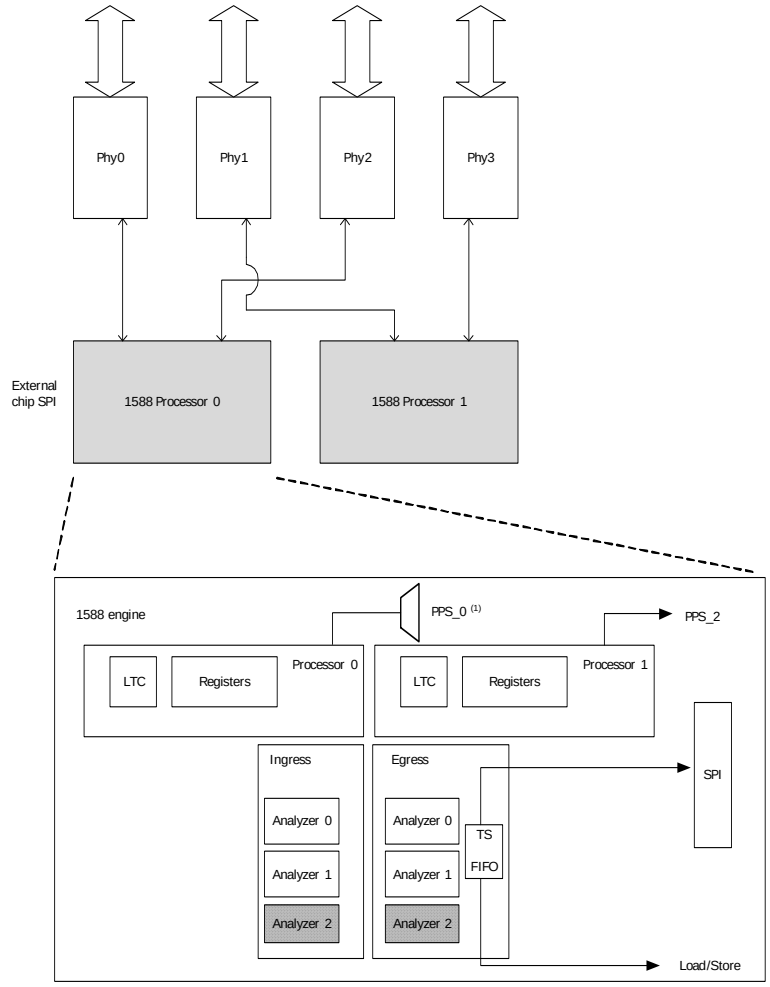

(1) PPS_0 MUX control used to access PHY 0 through PHY3

3.12.1.1 One-Step End-to-End Transparent Clock

End-to-end transparent clocks add the residence time (time it takes to traverse from the input to the output port(s) of the system) to all Sync and Delay_Req frames. It does not need to have any knowledge of the actual time, but if it is not locked to the frequency of the 1588 time, it will produce an error that is the ppm difference in frequency times the residence time.

When the TC is frequency-locked by means of 1588 or other methods (SyncE), the error is only caused by sampling inaccuracies.

When an E2E TC needs to recover the frequency using 1588, it must have a PHY with 1588 timestamping support before the 1588 engine, or another way of adding the local time to the correction field. The 1588 Engine is then able to receive Sync frames and adjust the local frequency to match the 1588 time. This can be done by adjusting the Time counter in each PHY or by adjusting the global Timetick clock.

Figure 27 • **One-Step E2E TC Mode A**

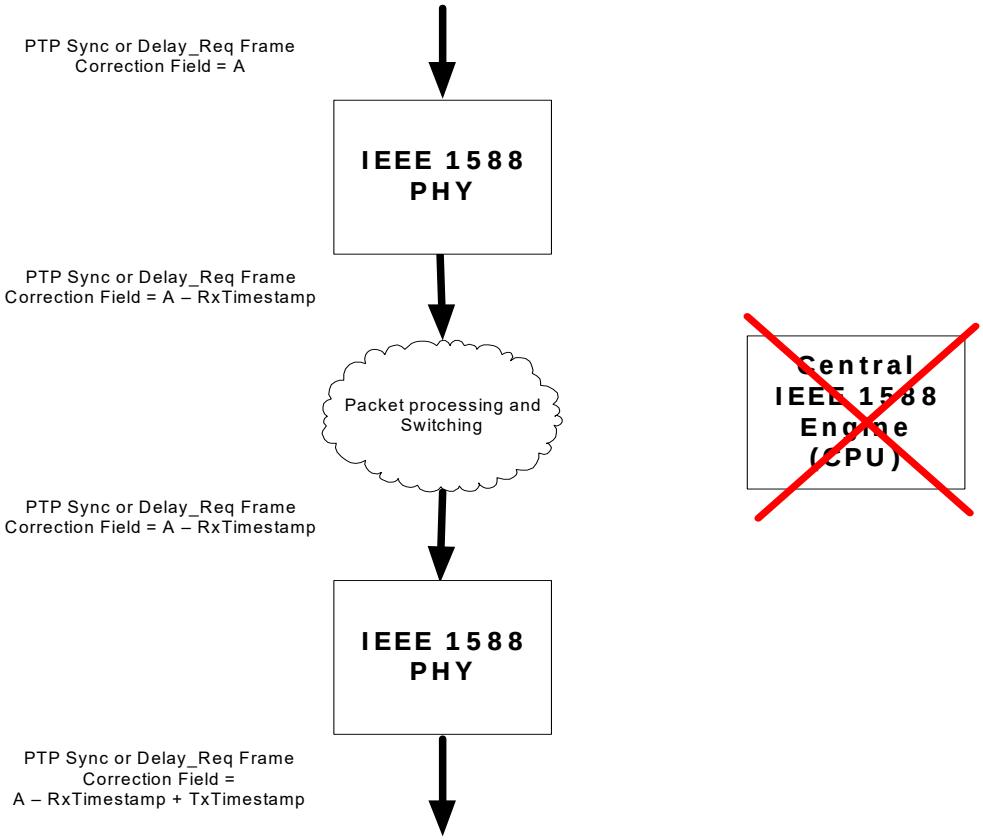

3.12.1.2 Ingress, Mode A

When the system works in one-step E2E TC mode, the system needs to forward Sync and Delay_Req frames through the system and add residence time = Egress timestamp – Ingress timestamp to the correction field in the frame before it leaves the system.

Each time the Timestamp block detects a rising edge on the Start_of_Frame_Indicator pulse (synchronized to the clock domain of the PHY core), it saves the value of the Local_Time that is receives from the Local Time Counter into a raw_timestamp register and converts this to raw_timestamp_ns. It then subtracts the value in the local_correction register from the raw_timestamp_ns value and stores the result in an active_timestamp_ns register. The local_correction register is programmed with the fixed latency from the measurement point to the place that the SFD is detected in the PCS/PMA logic. The timestamp block also contains a register that can be programmed with the known link asymmetry. This value is added or subtracted from the correction field, depending on the frame type.

When the frame leaves the PCS/PMA block it is loaded into a FIFO block that delays and stores the frame data for a few clock cycles to allow for later modifications of the frame. The data is also copied to the analyzer block that parses the incoming frame to detect whether it is a 1588 Sync or Delay_Req frame belonging to the PTP domain that the system is operating on.

If the analyzer detects that the frame is a 1588 Sync or Delay_Req frame belonging to the PTP domain(s) of system, it signals to the timestamp block which action to perform (Subtract), along with the correction field of the frame. It also delivers the write offset and data size (location of the correction field inside the frame, 8 bytes wide) to the rewriter.

If the analyzer detects that the frame is not matched, it signals to the Timestamp block and the Rewriter block to ignore the frame (NOP), which allows it to pass unmodified and flushes the saved timestamp in the Timestamp block.

If the Timestamp block gets the Subtract action, it subtracts the value in the active_timestamp_ns register from the value it receives from the analyzer (the original correction field from the frame) and outputs the value on the New_Field bus to the Rewriter block.

The Rewriter block continuously takes data out of the FIFO block and feeds it to the system side PCS/PMA block (or SGMII/QSGMII interface) and has a counter that keeps track of the byte positions of the frame. When the Rewriter block receives a signal from the Timestamp block (rising edge of NF) to rewrite a specific position in the frame (that information comes from the analyzer block), it overwrites the position with the data on the New_Field bus and replaces the FCS of the frame. The rewriter also checks the original FCS of the frame to ensure that a frame that is received with a bad FCS and then modified by the rewriter is also sent out with a bad FCS. This is achieved by inverting the new FCS.

The result is that the frame send towards the system now has a correction field containing the value: original correction field – RX timestamp (converted to ns).

The following full calculations are performed:

- Sync frames: Internal Correction field = Original Correction field – (Raw_Timestamp_ns – Local_correction) + Asymmetry
- Delay_req frames: Internal Correction field = Original Correction field – (Raw_Timestamp_ns – Local_correction)

3.12.1.3 Egress, Mode A

The egress side works that same way as ingress, but the analyzer is setup to add the active_timestamp to the correction field.

When a frame is received from the system side PCS/PMA block (or SGMII/QSGMII interface) it is loaded into a FIFO block that delays and stores the frame data for a few clock cycles to allow for later modifications of the frame. The data is also copied to the analyzer block that parses the incoming frame to detect whether it is a 1588 Sync or Delay_Req frame belonging to the PTP domain that the system is operating on.

If the analyzer detects that the frame is a 1588 Sync or Delay_Req frame belonging to the PTP domain(s) of system, it signals to the timestamp block which action to perform (Add), along with the correction field of the frame. It also delivers the write offset and data size (location of the correction field inside the frame, 8 bytes wide) to the rewriter.

If the analyzer detects that the frame is not matched, it signals the Timestamp block and the Rewriter block to ignore the frame (let it pass unmodified and flush the saved timestamp in the Timestamp block).

If the Timestamp block gets the Add action, it adds the current value of the active_timestamp_ns register with the value of the correction field it gets from the analyzer and outputs the value on the New_Field bus to the Rewriter block.

The Rewriter block continuously takes data out of the FIFO block and feeds it to the line side PCS/PMA block and has a counter that keeps track of the byte positions of the frame (detects SFD and counts until next SFD). When the Rewriter block receives a signal from the Analyzer block to rewrite a specific position in the frame, it overwrites the position with the data on the New_Field bus and replaces the FCS of the frame. The rewriter also checks the original FCS of the frame and ensures that a frame that is received with a bad FCS and then modified by the rewriter is also sent out with a bad FCS. This is achieved by inverting the new FCS.

The following full calculations are performed:

- Sync frames: Correction field = Internal Correction field + (Raw_Timestamp_ns + Local_correction)
- Delay_req frames: Correction field = Internal Correction field + (Raw_Timestamp_ns + Local_correction) – Asymmetry

Figure 28 • **One-Step E2E TC Mode B**

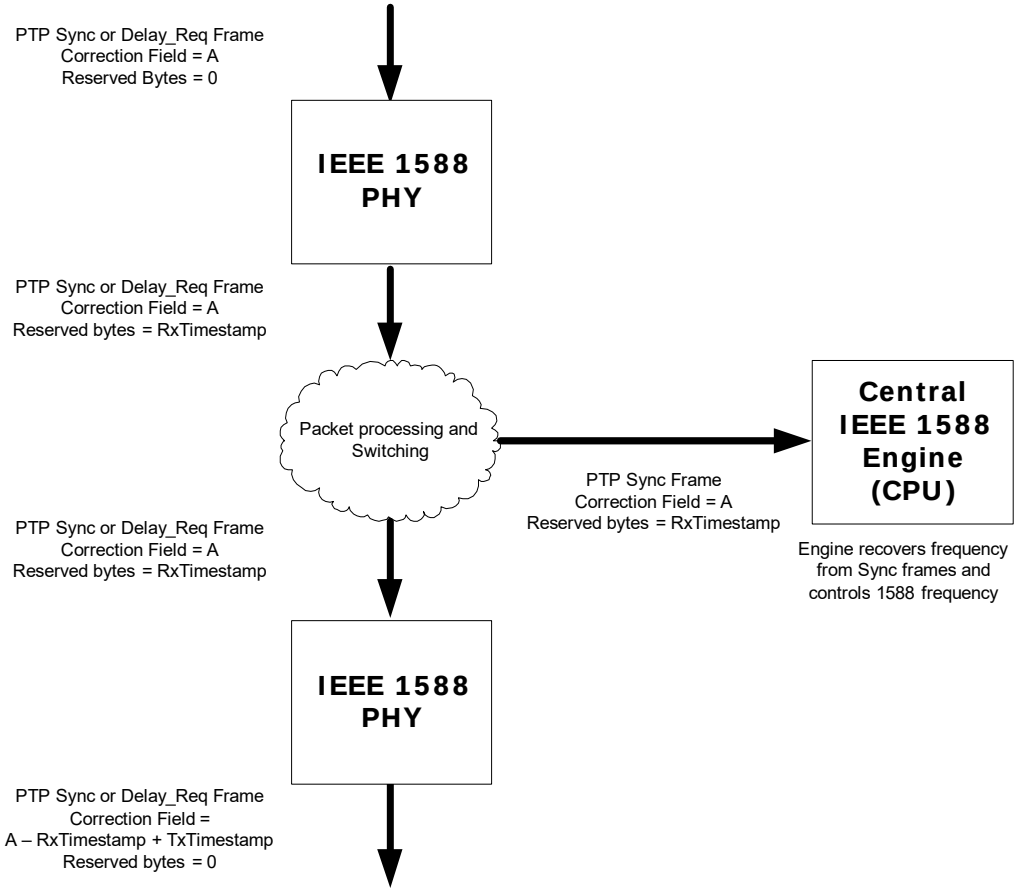

3.12.1.4 Ingress, Mode B

In Ingress Mode B, all calculations are performed at the Egress port. When the system works in one-step E2E TC mode, the system need to forward Sync and Delay_Req frames through the system and add residence time = Egress timestamp – Ingress timestamp to the correction field in the frame before it leaves the system.

On the ingress side, when the analyzer detects Sync or Delay_Req frames it adds the RX timestamp to the four reserved bytes in the PTP frame.

The following full calculations are performed:

- Sync frames: Reserved_bytes = Raw_Timestamp_ns – Local_correction + Asymmetry
- Delay_req frames: Reserved_bytes = Raw_Timestamp_ns – Local_correction

3.12.1.5 Egress, Mode B

All the calculations are done at the egress side. When the analyzer detects Sync or Delay_Req frames it performs the following calculation:

Correction field = Original correction field + TX timestamp – RX timestamp

The value of the RX timestamp is extracted from four reserved bytes in the PTP header.

The four reserved bytes are cleared back to 0 before transmission.

The result is that every Sync and Delay_Req frame that belongs to the PTP domain(s) and is configured as one-step E2E TC in the system will exit the system with a correction field that contains the following:

Correction field = Original correction field + TX timestamp – RX timestamp

All this is done without any interaction with a CPU system, other than the initial setup. There is no bandwidth expansion. Standard switching/routing tunneling can be done between the ingress and egress PHY, provided that the analyzers in the ingress PHY and egress PHY are set up to catch the sync and Delay_req on both. If the PTP sync and Delay_req frames are modified inside the system, the egress analyzer must be able to detect the egress sync and delay_req frames; otherwise, the egress sync and Delay_req frames will have an incorrect correction field.

The following full calculations are performed:

- Sync frames: Correction field = Original Correction field + (Raw_Timestamp_ns + Local_correction) – Reserved_bytes
- Delay_req frames: Correction field = Original Correction field + (Raw_Timestamp_ns + Local_correction) – Reserved_bytes – Asymmetry

3.12.2 Supporting IEEE 1588 Timestamping Applications

This section describes the integrated PTP block that supports IEEE 1588-2008 timestamping with encapsulation support.

Figure 29 • **Linecard E2E TC PHY application**

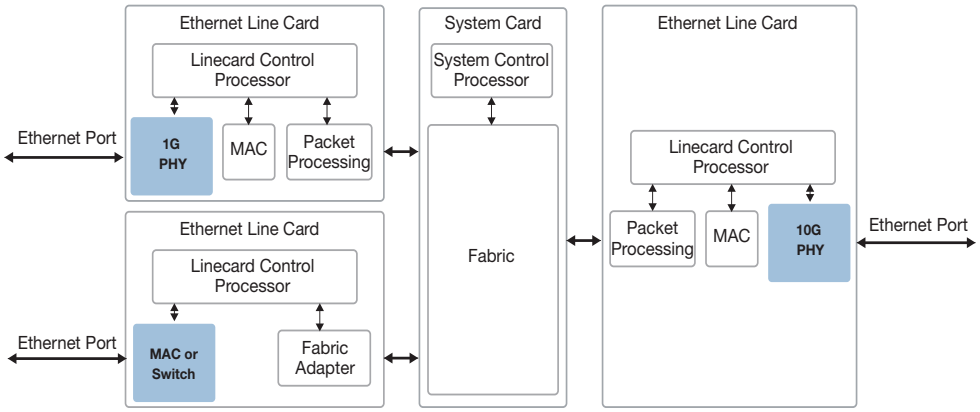

3.12.3 Application 1: IEEE 1588 One-Step E2E TC in Systems

Unique advantages for implementing IEEE 1588-2008:

- When several VSC8574-01 devices or Microsemi PHYs with integrated 1588 timestamping blocks are used on all ports within the system that support IEEE 1588 one-step E2E TC, the rest of the system does not need to be IEEE 1588 aware and there is no CPU maintenance needed once the system is set up
- As all the PHYs in a system can be configured the same way, it supports fail-over of IEEE 1588 masters without any CPU intervention
- VSC8574-01 and another Microsemi PHYs with integrated 1588 timestamping block also works for pizza box solutions, where the switch/router can be upgraded to support IEEE 1588 E2E TC
- The requirements to the rest of the system are:
- Delivery of a synchronous global timetick clock (or reference clock) to the PHYs
- Delivery of a global timetick load, that synchronizes the local time counters in each port.
- CPU access to each PHY to setup the required configuration. Can be MDC/MDIO or a dedicated CPU interface.

3.12.4 Application 2: IEEE 1588 TC and BC in Systems

This is the basically the same system as above, with the addition of a central IEEE 1588 engine (Boundary Clock). The 1588 engine is most likely a CPU system, possible together with hardware support functions to generate Sync frames (for BC and ordinary clock masters). The switch/fabric needs to have the ability to redirect (and copy) PTP frames to the 1588 engine for processing.

Figure 30 • **BC Linecard Application**

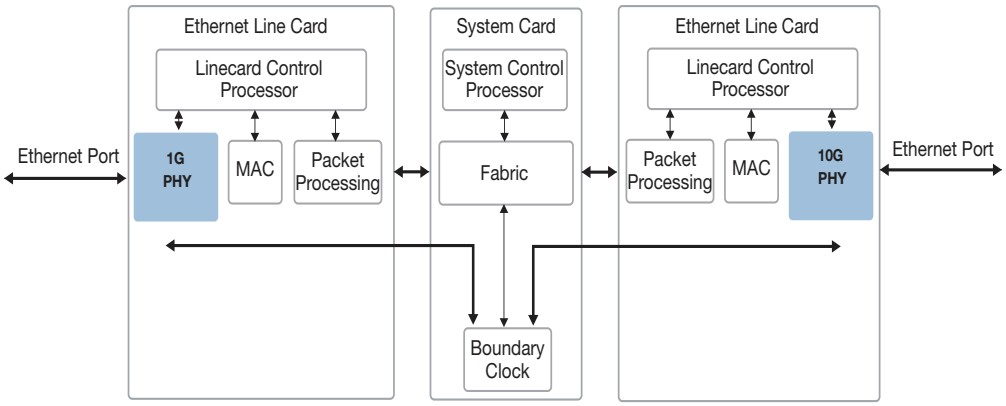

This solution also works for pizza boxes. To ensure that blade redundancy works, it the PHYs for the redundant blades must have the same 1588-in-the-PHY configuration.

The requirements to the rest of the system are:

- Delivery of a synchronous global timetick clock (or reference clock) to the PHYs
- Delivery of a global timetick load, that synchronizes the local time counters in each port
- CPU access to each PHY to setup the required configuration. For one-step support this can be MDC/MDIO. For two-step support, a higher speed CPU interface might be required (depending on the number of timestamps that are required to be read by the CPU). In blade systems it might be required to have a local CPU on the blade that collects the information and sends it to the 1588 engine by means of the control plane or the data plane. In advanced MAC/Switch devices this might be an internal CPU
- Fabric must be able to detect 1588 frames and redirect some of them to the central 1588 engine

The same solution can also be used to add Y.1731 delay measurement support. This does not require a local CPU on the blade, but the fabric must be able to redirect OAM frames to a local/central OAM processor

3.12.5 Application 3: Enhancing IEEE 1588 Accuracy for CE Switches and MACs

Connecting VSC8574-01 or other Microsemi PHYs have integrated 1588 time stamping in front of the CE Switches and MACs improves the accuracy of the 1588 timestamp calculation. This is due to the clock boundary for the XAUI SGMII/QSGMII interface. It will also add support for one-step TC and BC on the Jaguar and Caracal family of devices.

3.12.6 Supporting One-Step Peer-to-Peer Transparent Clock

In P2P TC, the P2P TC device is actively sending out and receiving pDelay_Req and pDelay_Resp messages and calculating the path delays to each neighbor node in the PTP network. When a Sync frame traverses a P2P TC, the correction field is updated with both the residence time and the calculated path delay on the port that the Sync frame came in on.

Figure 31 • **Delay Measurements**

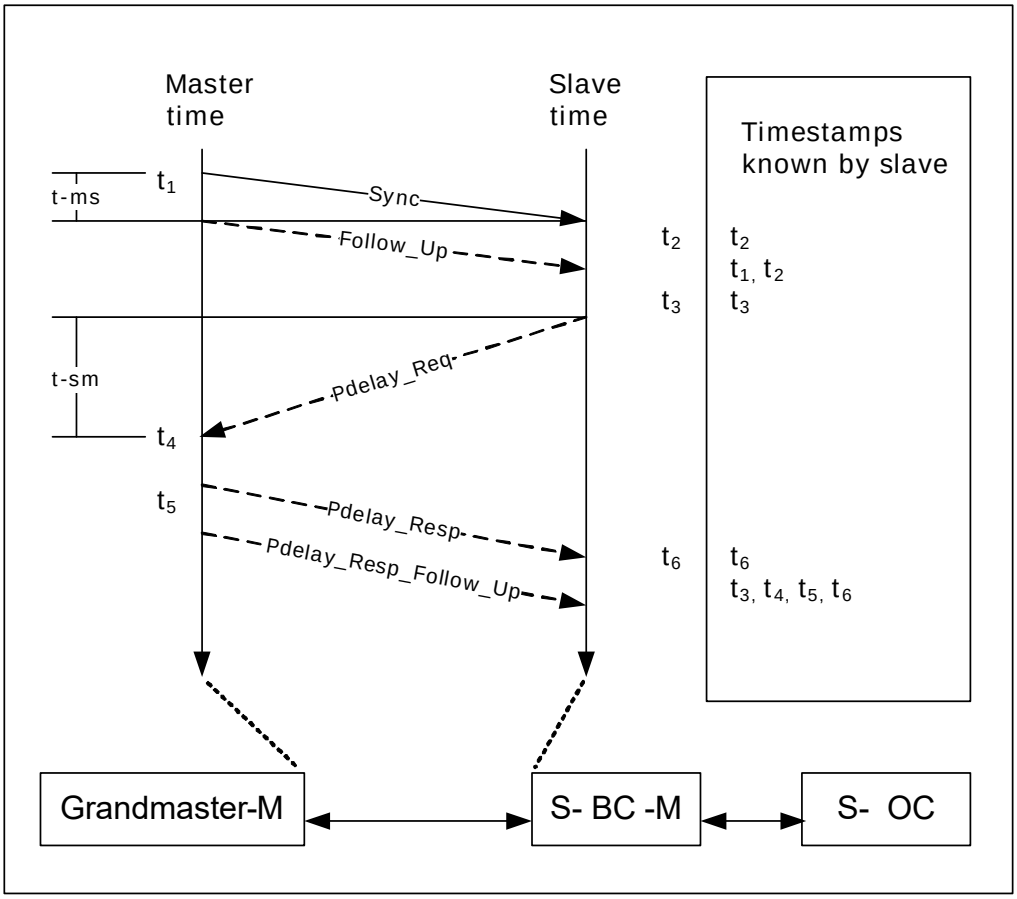

To calculate the path delays on a link, the 1588 engine (located somewhere in the system) generates Pdelay_Req messages on all ports. When transmitted, the actual TX timestamp t3 is saved for the CPU to read.

When a P2P TC, BC, or OC receives a Pdelay_Req frame, it saves the Rx timestamp (t4) and generates a Pdelay_Resp frame, which adds t5 – t4 to the correction field copied from the received Pdelay_Req frame, where t5 is the time that the Pdelay_Resp leaves the port (t5).

When a P2P TC receives the Pdelay_Resp frame, it saves the RX timestamp (t6) and then calculates the path delay as (t6 – t3 – the correction field of the frame)/2. The timestamp corrections are combined into a single formula as follows:

Path delay = (t6 – (t3 + (t5 – t4))/2 = (t6 – t3 – t5 + t4)/2 = ((t4 – t3) + (t6 – t5))/2

The two path delays are divided by two, but in such a way as to cancel out any timing difference between the two devices.

A slight modification can be made to the algorithm to remove the CPU processing overhead of reading the t3 time stamp. To modify the algorithm, the IEEE 1588 engine should send the Pdelay_req message with a software generated t3 value in the origin time stamp the sub-second value of the t3 time stamp in the reserved bytes of the PTP header, and a correction field of 0. The software generated t3 time stamp should just be within a second before the actual t3 time. The egress PHY should then be configured to perform E2E TC egress operation, meaning calculate the "residence time" from the inserted t3 time stamp to the actual t3 time and insert this value in the correction field of the frame. When the IEEE 1588 engine receives the corresponding Pdelay_resp frame back it can use the software generated t3 value as the correction field of the Pdelay_resp frame will contain a value that compensates for the actual t3 transmission time.

A P2P TC adds the calculated one-way path delay to the Ingress correction field, and this ensures that the timestamp + correction field in the egress Sync frames is accurate and a slave connected to the P2P TC only needs to add the link delay from the TC to the slave.

The following section describes both the standard and modified methods for taking P2P measurements.

3.12.6.1 Ingress, Special

If the analyzer detects that the frame is a 1588 Sync frame belonging to the PTP domain(s) of system, it signals to the timestamp block which action to perform (Subtract_p2p), along with the correction field of the frame. It also delivers the write offset and data size (location of the correction field inside the frame, 8 bytes wide) to the rewriter.

If the analyzer detects that the frame is a 1588 Pdelay_Req frame belonging to the PTP domain(s) of system, it signals to the timestamp block which action to perform (Subtract), along with the correction field of the frame. It also delivers the write offset and data size (location of the correction field in the PTP header, 8 bytes wide) to the rewriter.

If the analyzer detects that the frame is a 1588 Pdelay_Resp frame belonging to the PTP domain(s) of system, it signals to the timestamp block which action to perform (Add). It also delivers the write offset and data size (location of the correction field, 8 bytes wide) to the rewriter.

If the Timestamp block gets the Subtract_p2p action, it subtracts the value in the active_timestamp_ns_p2p register from the correction_field data and outputs the value on the New_Field bus to the Rewriter block.

If the Timestamp block gets the Subtract action, it subtracts the value in the active_timestamp_ns register from the correction field value and outputs the value on the New_field bus to the Rewriter block.

If the Timestamp block gets the Add action, it adds the correction field value to the value in the active_timestamp_ns register and outputs the value on the New_Field bus to the Rewriter block.

The following full calculations are performed:

- Sync frames: Internal Correction field = Original Correction field – (Raw_Timestamp_ns – Local_correction) + Path_delay + Asymmetry
- Pdelay_req frames: Internal Correction field = Original Correction field – (Raw_Timestamp_ns – Local_correction)
- Pdelay_resp frames: Internal Correction field = Original Correction field + (Raw_Timestamp_ns – Local_correction) + Asymmetry

3.12.6.2 Egress, Special

If the analyzer detects that the frame is a 1588 Sync frame belonging to the PTP domain(s) of system, it signals to the timestamp block which action to perform (Add), along with the correction field of the frame. It also delivers the write offset and data size (location of the correction field inside the frame, 8 bytes wide) to the rewriter.

If the analyzer detects that the frame is a 1588 Pdelay_Req frame belonging to the PTP domain(s) of system, it signals to the timestamp block which action to perform (Subtract), along with the original correction field of the frame (will have the value of 0). It also delivers the write offset and data size (location of the correction field inside the frame, 8 bytes wide) to the rewriter.

If the analyzer detects that the frame is a 1588 Pdelay_Resp frame belonging to the PTP domain(s) of system, it signals to the timestamp block which action to perform (Add), along with the original correction field of the frame. It also delivers the write offset and data size (location of the correction field inside the frame, 8 bytes wide) to the rewriter.

If the analyzer detects that the frame is not matched, it signals to the Timestamp block and the Rewriter block to ignore the frame (let it pass unmodified and flush the saved timestamp in the Timestamp block).

The following full calculations are performed:

- Sync frames: Correction field = Internal Correction field + (Raw_Timestamp_ns + Local_correction)
- Pdelay_req frames: Correction field = Internal Correction field – (Raw_Timestamp_ns + Local_correction) – Asymmetry

- Pdelay_resp frames: Correction field = Original Correction field + (Raw_Timestamp_ns + Local_correction)

Figure 32 • **One-Step P2P TC Standard**

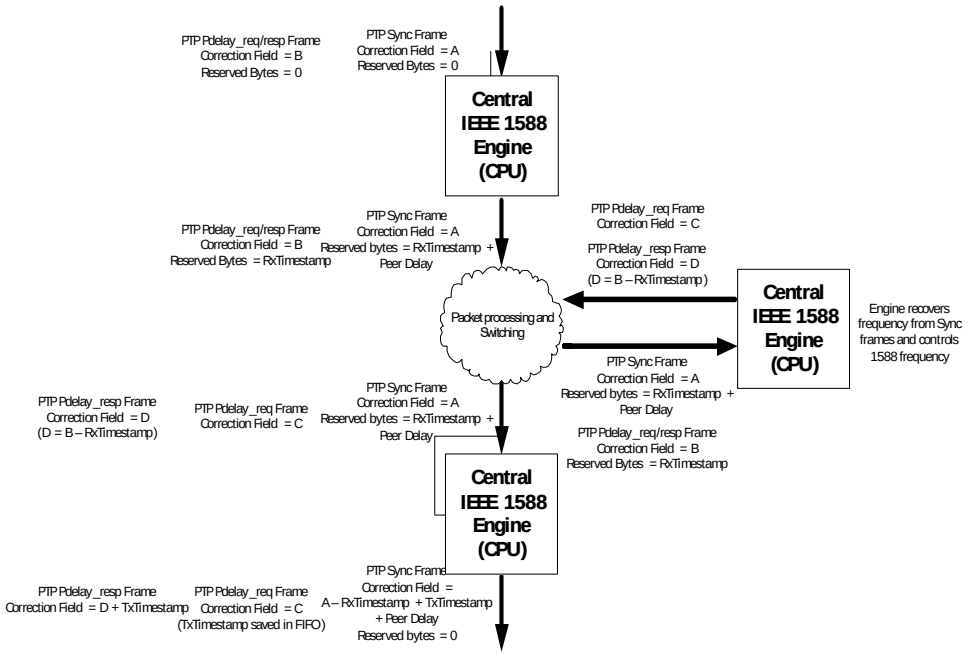

3.12.6.3 Ingress, Standard

If the analyzer detects that the frame is a 1588 Sync frame belonging to the PTP domain(s) of system, it signals to the timestamp block which action to perform (subtract_p2p), along with the correction field of the frame. It also delivers the write offset and data size (location of the correction field inside the frame, 8 bytes wide) to the rewriter.

If the analyzer detects that the frame is a 1588 Pdelay_Req frame belonging to the PTP domain(s) of system, it signals to the timestamp block which action to perform (Write). It also delivers the write offset and data size (location of the reserved 4 bytes in the PTP header we use to save the ns part of the RX timestamp, 4 bytes wide) to the rewriter.

If the analyzer detects that the frame is a 1588 Pdelay_Resp frame belonging to the PTP domain(s) of system, it signals to the timestamp block which action to perform (Write). It also delivers the write offset and data size (location of the reserved 4 bytes in the PTP header we use to save the ns part of the RX timestamp, 4 bytes wide) to the rewriter.

If the Timestamp block gets the Subtract_p2p action, it subtracts the value in the active_timestamp_ns_p2p register from the correction_field data and outputs the value on the New_Field bus to the Rewriter block.

If the Timestamp block gets the Write action, it outputs the value of the active_timestamp_ns register on the New_field bus to the Rewriter block.

The following full calculations are performed:

- Sync frames: Internal Correction field = Original Correction field – (Raw_Timestamp_ns – Local_correction) + Path_delay + Asymmetry
- Pdelay_req frames: Reserved_bytes = Raw_Timestamp_ns – Local_correction
- Pdelay_resp frames: Reserved_bytes = Raw_Timestamp_ns – Local_correction + Asymmetry

3.12.6.4 Egress, Standard

If the analyzer detects that the frame is a 1588 Sync frame belonging to the PTP domain(s) of system, it signals to the timestamp block which action to perform (Add), along with the correction field of the frame.

It also delivers the write offset and data size (location of the correction field inside the frame, 8 bytes wide) to the rewriter.

If the analyzer detects that the frame is a 1588 Pdelay_Req frame belonging to the PTP domain(s) of system, it signals to the timestamp block which action to perform (Write, Save), along with the original correction field of the frame (will have the value of 0). It also delivers the write offset and data size (0 No data is actually written into the frame) to the rewriter. In addition it outputs the field that holds the frame identifier (sequenceId from the PTP header) to the timestamp FIFO, to save along with the TX timestamp.

If the analyzer detects that the frame is a 1588 Pdelay_Resp frame belonging to the PTP domain(s) of system, it signals to the timestamp block which action to perform (Add - this requires that the 1588 engine has subtracted the RX timestamp from the correction field), along with the original correction field of the frame. It also delivers the write offset and data size (location of the correction field inside the frame, 8 bytes wide) to the rewriter.

If the Timestamp block gets the Write, Save action it outputs the value of the active_timestamp_ns register on the New_field bus to the Rewriter block and sets the save_timestamp bit.

If the Timestamp block gets the Add action, it adds the correction field value to the value in the active_timestamp_ns register and outputs the value on the New_Field bus to the Rewriter block.

The TX Timestamp FIFO block contains an (implementation specific) amount of buffer memory. It simply stores the TX timestamp values that it receives from the Timestamp block together with the frame identifier data it receives from the Analyzer block and has a CPU interface that allows the 1588 engine to read out the timestamp sets (Frame identifier + New TX timestamp).

The following full calculations are performed:

- Sync frames: Correction field = Internal Correction field + (Raw_Timestamp_ns + Local_correction)
- Pdelay_req frames: FIFO = Raw_Timestamp_ns + Local_correction – Asymmetry
- Pdelay_resp frames: Correction field = Internal Correction field + (Raw_Timestamp_ns + Local_correction)

3.12.7 Supporting One-Step Boundary Clock/Ordinary Clock

In one-step boundary clock, the BC device acts as an ordinary clock slave on one port and as master on all the other ports. On the master ports, Sync frames are transmitted from the 1588 engine that holds the Origin timestamp. These frames will have the correction field or the full TX timestamp updated on the way out though the PHY.

Master ports also receive Delay_req from the slaves and respond with Delay_resp messages. The Delay_req messages are time stamped on the way through the PHY and the 1588 engine receives the Delay_req frame and generates a Delay_resp message. The Delay_resp messages are not event messages and are passed though the PHY as any other frame.

The port that is configured as slave receives Sync frames from its master. The Sync frames get an RX timestamp added in the PHY and forwarded to the 1588 engine.

The 1588 engine also generates Delay_req frames that are send out on the port that is configures as slave port.

Boundary clocks and ordinary clocks must also reply to Pdelay_req messages just as P2P TC, but the procedure is the same as for the P2P TC, so this is not described here.

Figure 33 • **One-Step E2E BC**

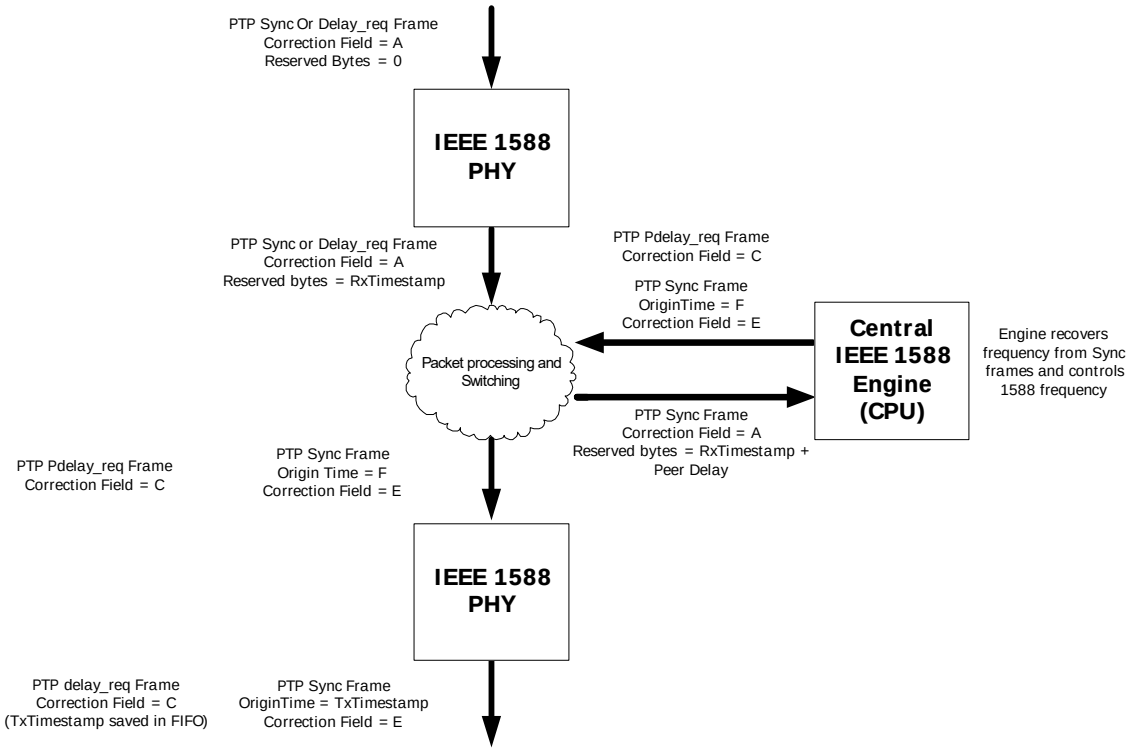

3.12.7.1 Ingress

If the analyzer detects that the frame is a 1588 Sync or Delay_req frame belonging to the PTP domain(s) of system, it signals to the timestamp block which action to perform (Write). It also delivers the write offset and data size (location of the four reserved bytes in the PTP header, 4 bytes wide) to the rewriter.

If the Timestamp block gets the Write action, it puts the value of the active_timestamp register out on the New_field bus to the Rewriter block and the rewriter block adds this timestamp (ns part of it) to the four reserved bytes in the frame and recalculates FCS.

The following full calculations are performed:

- Sync frames: Reserved_bytes = (Raw_Timestamp_ns – Local_correction) + Asymmetry
- Delay_req frames: Reserved_bytes = (Raw_Timestamp_ns – Local_correction)

3.12.7.2 Egress

If the analyzer detects that the frame is a 1588 Sync frame belonging to the PTP domain(s) of system, it signals to the timestamp block which action to perform (Write), along with correction field of the frame (contains the offset from the system PTP domain to any other domain that the frame belong to - set by the 1588 engine that generates the frame). It also delivers the write offset and data size (location of the TX timestamp inside the frame, 10 bytes wide) to the rewriter.

If the analyzer detects that the frame is a 1588 Delay_Req frame belonging to the PTP domain(s) of system, it signals to the timestamp block which action to perform (Write, Save). It also delivers the write offset and data size (location of the TX timestamp inside the frame, 10 bytes wide to the rewriter. It also outputs 10 bytes of frame identifier to the TX Timestamp FIFO, to be saved along with the TX timestamp.

If the Timestamp block gets the Write, Save action it outputs the current value from the active_timestamp register on the New_field bus to the Rewriter Timestamp_fifo blocks and signals to the Timestamp FIFO block that it must save the New_field data along with the frame identifier data it received from the Analyzer block.

The TX Timestamp FIFO block contains an (implementation specific) amount of buffer memory. It simply stores the TX timestamp values that it receives from the Timestamp block together with the frame

identifier data it receives from the Analyzer block and has a CPU interface that allows the 1588 engine to read out the timestamp sets (Frame identifier + New TX timestamp).

The following full calculations are performed:

- Sync frames: OriginTimestamp = (Raw_Timestamp + Local_correction)
- Delay_req frames: OriginTimestamp = (Raw_Timestamp + Local_correction) – Asymmetry

3.12.8 Supporting Two- Step Boundary/Ordinary Clock

Two-steps clocks are used in systems that cannot update the correction field on-the-fly and this requires more CPU power.

Every time a TX timestamp is sent in a frame, the 1588 engine needs to read the actual TX transmission time from the Timestamp FIFO and issue a follow-up message containing this timestamp.

Figure 34 • **Two-Step E2E BC**

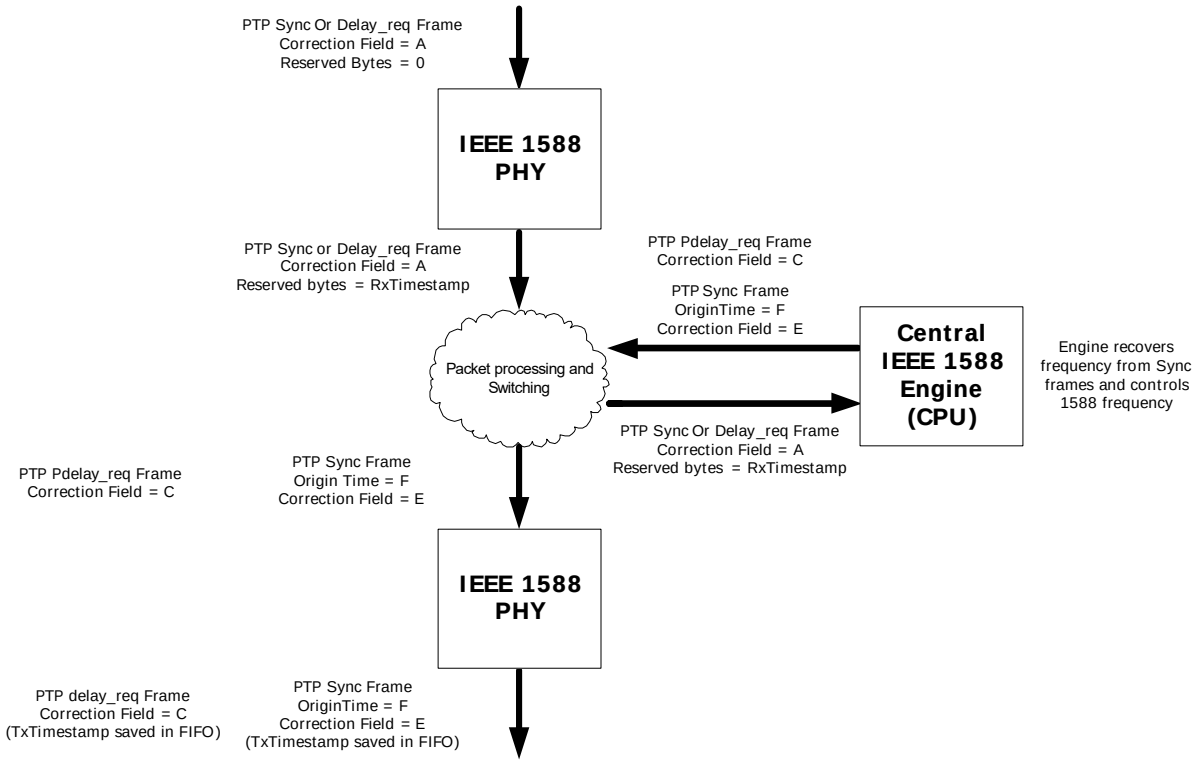

3.12.8.1 Ingress

If the analyzer detects that the frame is a 1588 Sync or Delay_req frame belonging to the PTP domain(s) of system, it signals to the timestamp block which action to perform (Write). It also delivers the write offset and data size (location of the four reserved bytes in the PTP header, 4 bytes wide) to the rewriter.

If the Timestamp block gets the Write action, it puts the value of the active_timestamp register out on the New_field bus to the Rewriter block and the rewriter block adds this timestamp (ns part of it) to the four reserved bytes in the frame and recalculates FCS.

Note: When secure timing delivery is required, the 1588 engine must revert the four reserved bytes back to 0 before performing integrity check.

The following full calculations are performed:

- Sync frames: Reserved_bytes = (Raw_Timestamp – Local_correction) + Asymmetry
- Delay_req frames: Reserved_bytes = (Raw_Timestamp – Local_correction)

3.12.8.2 Egress

If the analyzer detects that the frame is a 1588 Sync or Delay_Req frame belonging to the PTP domain(s) of system, it signals to the timestamp block which action to perform (Write, Save). The analyzer also delivers the write offset and data size (but as nothing is to be overwritten the values will be 0) to the rewriter. The analyzer outputs up to 15 bytes of frame identifier to the TX Timestamp FIFO to be saved along with the TX timestamp. The frame identifier must include, at minimum, the sequenceId field so the CPU can match the timestamp with the follow-up frame.

If the Timestamp block gets the Write, Save action it outputs the current value from the active_timestamp register on the New_field bus to the Rewriter (and timestamp FIFO) and sets the save_timestamp bit. The Timestamp_fifo block saves the New_field data along with the frame identifier data it received from the Analyzer block.

The following full calculations are performed:

- Sync frames: FIFO = (Raw_Timestamp + Local_correction)
- Delay_req frames: FIFO = (Raw_Timestamp + Local_correction) – Asymmetry

3.12.9 Supporting Two-Step Transparent Clock

In two-step transparent clocks, the RX and TX timestamps are saved for the 1588 Engine to read and the follow-up message is redirected to the 1588 engine so that it can update the correction field with the residence time.

Even though two-step transparent clocks can be used with this architecture, it is also possible to process the frames in the same manner as a one-step TC, because the slaves are required to take both the corrections fields from the Sync frames and the follow-up frames into account. This significantly reduces the CPU load for the TC. The following illustration shows two-step transparent clock normal operation.

Figure 35 • **Two-Step E2E TC**

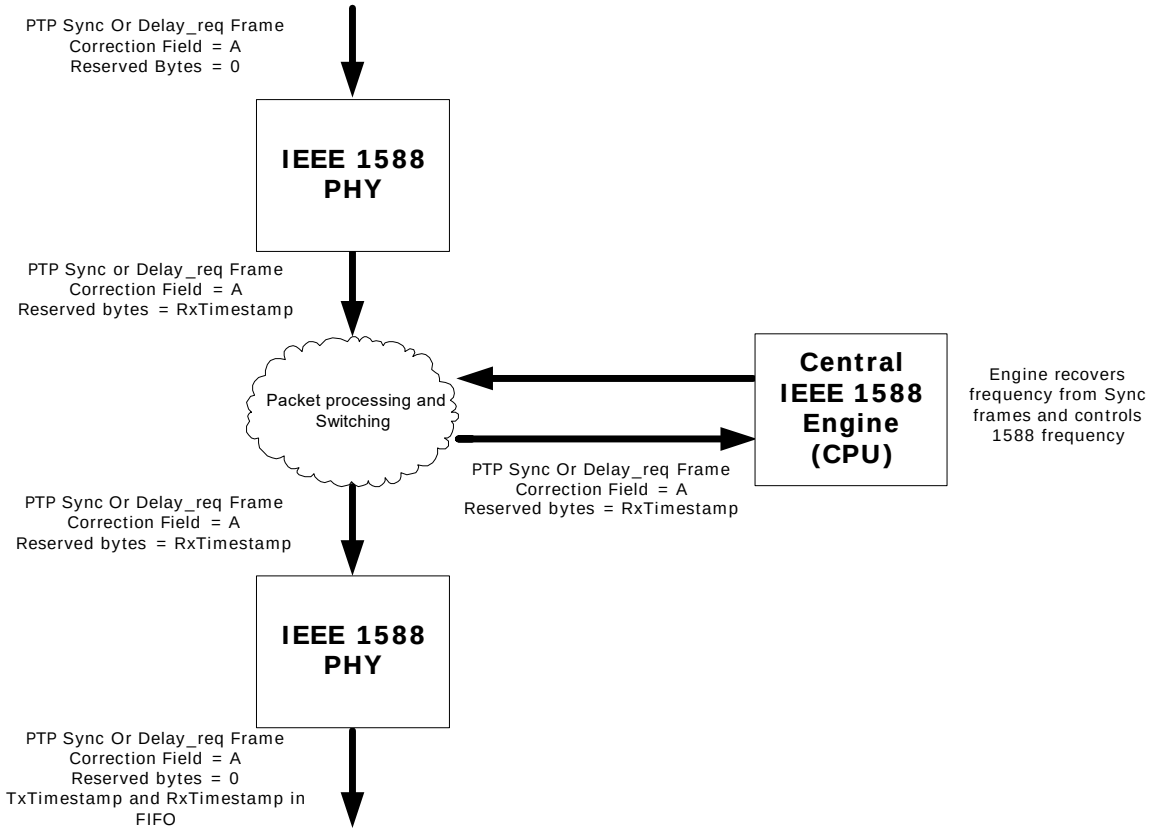

3.12.9.1 Ingress

If the analyzer detects that the frame is a 1588 Sync or Delay_Req frame belonging to the PTP domain(s) of system, it signals to the timestamp block which action to perform (Write). The analyzer also delivers the write offset and data size to the rewriter (four reserved bytes in the PTP header, which will be passed out on the egress port of the system). A changed reserved value may be significant in security protection. This method allowed the frames to be copied to the 1588 engine, so that it can extract the RX timestamp and that it knows that it needs to read the TX timestamps to be ready for the follow up message. It is also possible to save the RX timestamp value along with the TX timestamp in the TX timestamp FIFO.

If the Timestamp block gets the Write action, it outputs the current value from the active_timestamp register on the New_field bus to the Rewriter and the rewriter writes the ns part of the timestamp into the reserved bytes and recalculates FCS.

The following full calculations are performed:

- Sync frames: Reserved_bytes = (Raw_Timestamp_ns – Local_correction) + Asymmetry
- Delay_req frames: Reserved_bytes = Raw_Timestamp_ns – Local_correction

3.12.9.2 Egress

If the analyzer detects that the frame is a 1588 Sync or Delay_Req frame belonging to the PTP domain(s) of system, it signals to the timestamp block which action to perform (Write, Save). The analyzer also delivers the write offset and data size (but as nothing is to be overwritten the values will be 0) to the rewriter. The analyzer outputs 10 bytes of frame identifier to the TX Timestamp FIFO to be saved along with the TX timestamp. The frame identifier must include, at minimum, the sequenceId field so the CPU can match the timestamp with the follow-up frame. The analyzer also outputs the offset for the reserved fields in the PTP header to the rewriter, so that the rewriter field is reset to 0 and the temporary RX timestamp value is cleared.

If the Timestamp block gets the Write, Save action it outputs the current value from the active_timestamp register on the New_field bus to the Rewriter (and timestamp FIFO) and sets the save_timestamp bit. The Timestamp_fifo block saves the New_field data along with the frame identifier data it received from the Analyzer block. The frame identifier data that is saved can contain the reserved field in the PTP header that was written with the RX timestamp, so that the CPU now can read the set of TX and RX timestamp from the TX timestamp FIFO.

The following full calculations are performed:

- Sync frames: FIFO = Raw_Timestamp_ns + Local_correction (reserved_bytes containing the RX timestamp saved together with TX timestamp)
- Delay_req frames: FIFO = Raw_Timestamp_ns + Local_correction – Asymmetry (reserved_bytes containing the RX timestamp saved together with TX timestamp)

3.12.10 Calculating Y.1731 OAM Delay Measurements

Frame delay measurements can be made as one-way and two-way delay measurements. Microsemi recommends that the delay measurement be measured before the packets enter the queues, if the purpose is to measure the delay for different priority traffic, but it can be used with timestamping in the PHY to measure the delay through the network devices placed in the path between the measurement points.

The function is mainly an on-demand OAM function, but it can run continuously.

3.12.11 One-Way Delay Measurements

One-way delay measurements require that the two peers are synchronized in time. When they are not synchronized, only frame delay variations can be measured.

The MEP periodically sends out 1DM OAM frames containing a TxTimeStampf value in IEEE 1588 format.

The receiver notes the time of reception of the 1DM frame and calculates the delay.

Figure 36 • **Y.1731 1DM PDU Format**

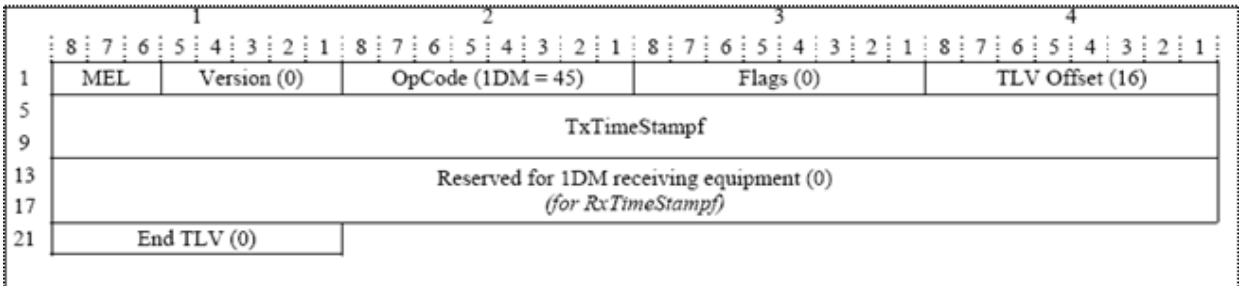

1. For one-way delay measurements, both MEPs must support IEEE 1588 and be in sync.
2. 1DM frame is generated by the CPU, but with an empty Tx timestamp.
3. The frame is transmitted by the initiating MEP.
4. The 1DM frame is classified as an outgoing 1DM frame by the Egress PHY and the PHY rewrites the frame with the time as TxFCf.
5. The receiving PHY classifies the incoming 1DM frame and writes the receive timestamp in reserved place (RxTimeStampf).
6. The frame is received by the peer MEP.
7. The frame is forwarded to the CPU that can calculate the delay.

Figure 37 • **Y.1731 One-Way Delay**

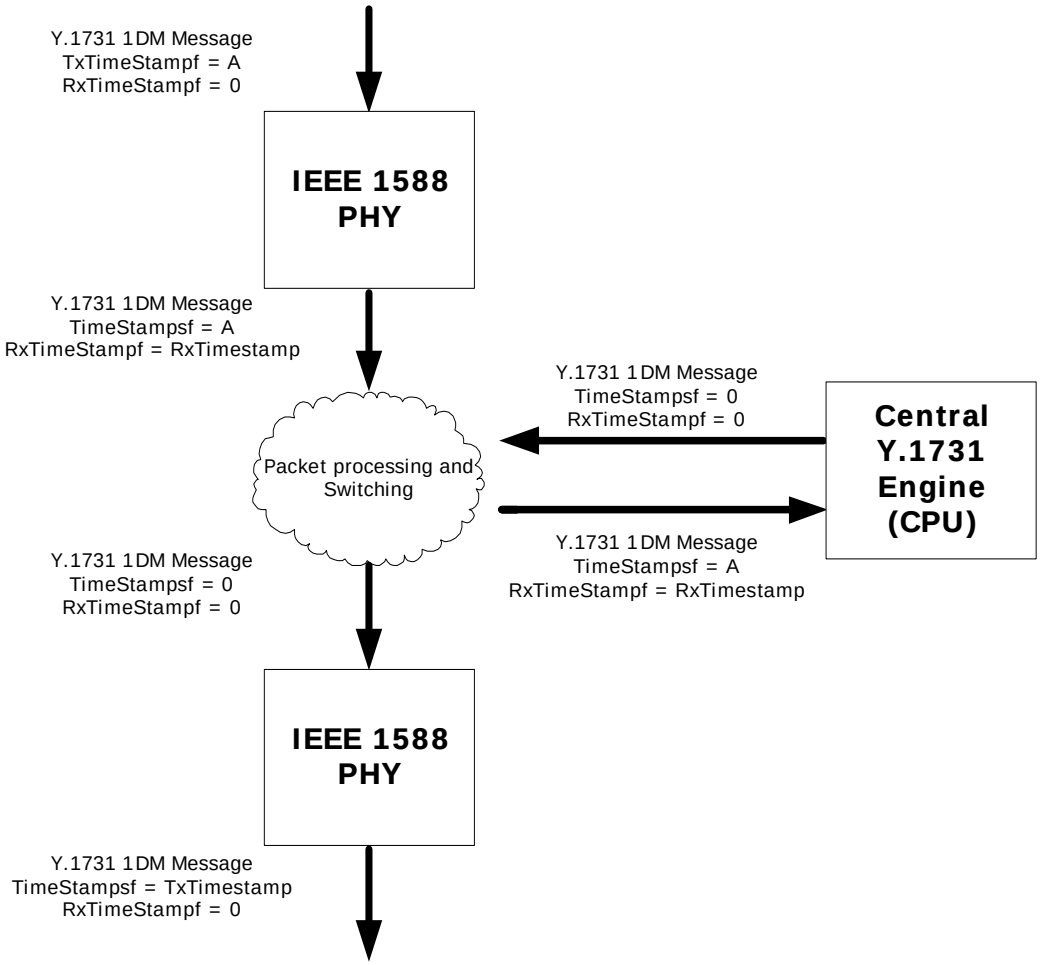

3.12.11.1 Ingress

If the analyzer detects that the frame is a Y.1731 1DM PDU frame belonging to the MEP, it signals to the timestamp block which action to perform (Write). The analyzer also delivers the write offset and data size (location of the RxTimeStampf location in the frame, 8 bytes wide) to the rewriter.

If the Timestamp block gets the Write action, it puts the value of the active_timestamp register out on the New_field bus to the Rewriter block and the rewriter block adds this timestamp to the reserved bytes in the frame and recalculates FCS.

The following calculation is performed for 1DM frames:

RxTimeStampf = (Raw_Timestamp – Local_correction)

3.12.11.2 Egress

If the analyzer detects that the frame is a Y.1731 1DM PDU frame belonging to the MEP, it signals to the timestamp block which action to perform (Write). It also delivers the write offset and data size (location of the TxTimeStampf location in the frame, 8 bytes wide) to the rewriter.

If the Timestamp block gets the Write action, it puts the value of the active_timestamp register out on the New_field bus to the Rewriter block and the rewriter block adds this timestamp to the reserved bytes in the frame and recalculates FCS.

The following calculation is performed for 1DM frames:

TxTimeStampf = (Raw_Timestamp + Local_correction)

3.12.12 Two-Way Delay Measurements

When performing two-way delay measurements, the initiating MEP transmits DMM frames containing a TxTimeStampf value. The receiving MEP replies with a DMR frame that is the same as the DMM frame, but with destination and source MAC address swapped and with a different OAMPDU opcode.

When the DMR frame is received back at the initiating MEP, the time of reception is noted and the total delay is calculated.

As an option, it is allowed to include two additional timestamps in the DMR frame: RxTimeStampf and TxTimeStampb. These contain the time that the DMM page is received for processing and the time the responding DMR reply is sent back, both in IEEE 1588 format.

Including these timestamps allow for exclusion of the processing time in the peer MEP, but it does not require that the two MEPs are synchronized.

Figure 38 • **Y.1731 DMM PDU Format**

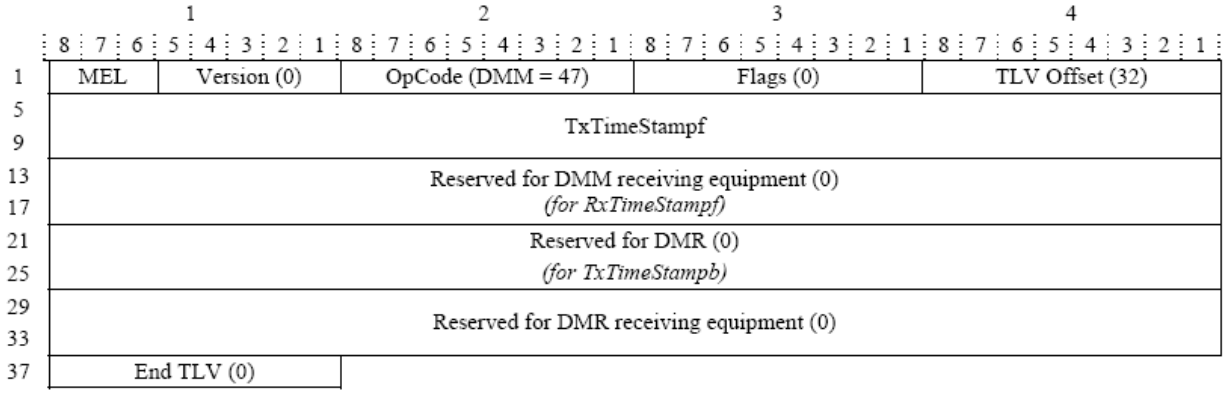

In that case, the following frame flow is needed (two-way delay measurement):

1. DMM frame is generated by the CPU (initiating MEP), but with an empty Tx timestamp.
2. In the egress PHY the DMM frame is classified as an outgoing DMM frame from the MEP and the PHY rewrites the frame with the time as TxTimeStampf.
3. In the ingress PHY the frame is classified as an incoming DMM belonging to the MEP and the RxTimeStampf in the frame is written (the frame has a reserved space for this).
4. The DMM frame is forwarded to the MEP (CPU).
5. The CPU processes the frame (swaps SA/DA MAC addresses, modifies the opcode to DMT) and sends out a DMT frame.
6. The outgoing DMT frame is detected in the egress PHY and the TxTimeStampb is written into the frame.
7. In the ingress PHY the frame is classified as an incoming DMT belonging to the MEP and the RxTimeStampb in the frame in written (the frame has a reserved space for this).
8. The frame is forwarded to the CPU that can calculate the delays.

Figure 39 • **Y.1731 Two-Way Delay**

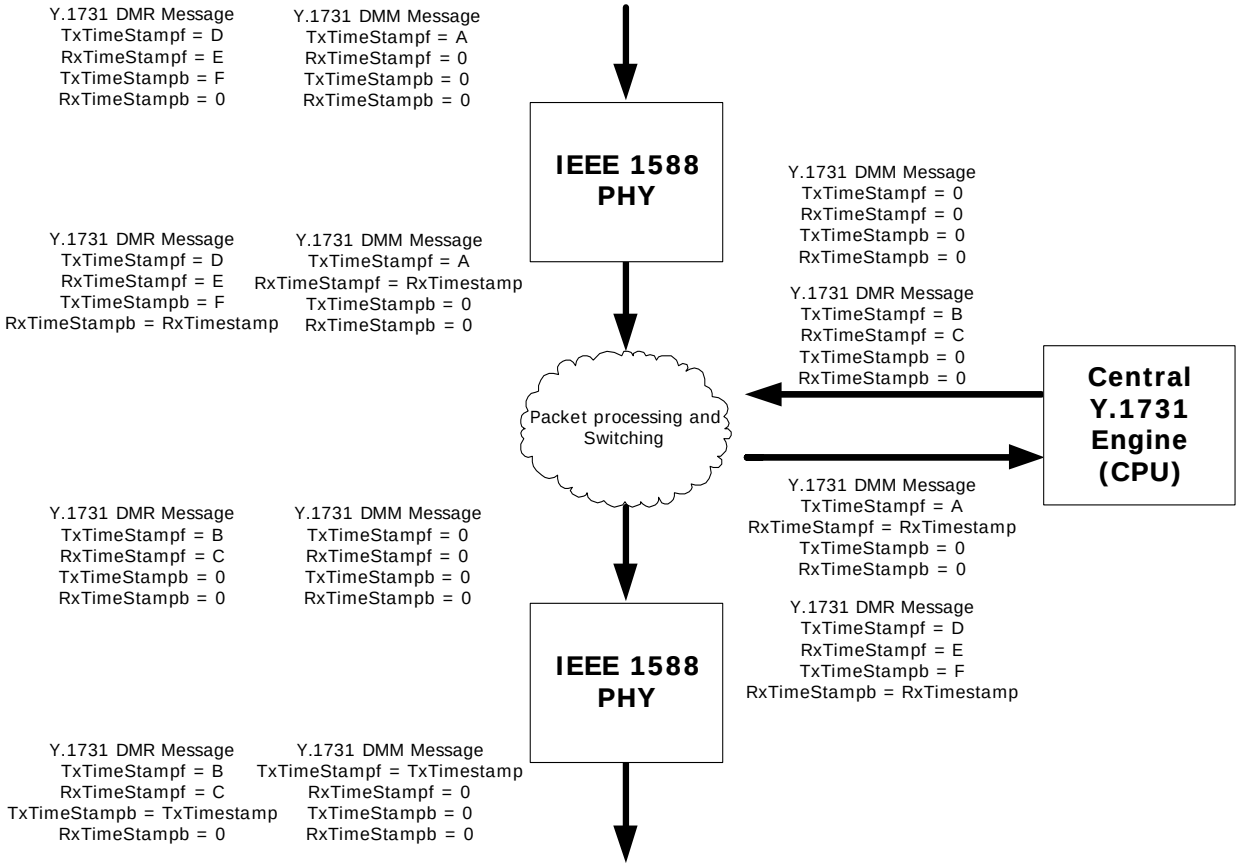

3.12.12.1 Ingress

If the analyzer detects that the frame is a Y.1731 DMM PDU frame belonging to the MEP, it signals to the timestamp block which action to perform (Write). It also delivers the write offset and data size (location of the RxTimeStampf location in the frame, 8 bytes wide) to the rewriter.

If the analyzer detects that the frame is a Y.1731 DMT PDU frame belonging to the MEP, it signals to the timestamp block which action to perform (Write). It also delivers the write offset and data size (location of the RxTimeStampb location in the frame, 8 bytes wide) to the rewriter.

If the Timestamp block gets the Write action, it puts the value of the active_timestamp register out on the New_field bus to the Rewriter block and the rewriter block adds this timestamp to the reserved bytes in the frame and recalculates FCS.

The following calculations are performed:

- DMM frames: RxTimeStampf = (Raw_Timestamp – Local_correction)
- DMT frames: RxTimeStampb = (Raw_Timestamp – Local_correction)

3.12.12.2 Egress

If the analyzer detects that the frame is a Y.1731 DMM PDU frame belonging to the MEP, it signals to the timestamp block which action to perform (Write). It also delivers the write offset and data size (location of the TxTimeStampf location in the frame, 8 bytes wide) to the rewriter.

If the analyzer detects that the frame is a Y.1731 DMT PDU frame belonging to the MEP, it signals to the timestamp block which action to perform (Write). It also delivers the write offset and data size (location of the TxTimeStampb location in the frame, 8 bytes wide) to the rewriter.

If the Timestamp block gets the Write action, it puts the value of the active_timestamp register out on the New_field bus to the Rewriter block and the rewriter block adds the timestamp to the reserved bytes in the frame and recalculates FCS as follows:

- DMM frames: TxTimeStampf = (Raw_Timestamp + Local_correction)
- DMT frames: TxTimeStampb = (Raw_Timestamp + Local_correction)

3.12.13 IEEE 1588 Device Synchronization

It is important to keep all the Local Clock blocks synchronized to the accurate time over a complete system. To maintain ns accuracy, the signal routing and internal signal delays must be taken into account when configuring a system.

The architecture described in this document assumes that there is a global synchronous clock available in the system. If the system is a telecom system where the system is locked to a PRC, the system clock can be adjusted to match the PRC, meaning that once locked, the frequency of the system clock ensures that the local clocks are progressing (counting) with the accurate frequency. This system clock can be locked to the PRC using 1588, SyncE, SDH, or by other means.

A global timing signal must also be distributed to all the devices. This could be a 1 pps pulse or another slow synchronization pulse, like a 4 kHz synchronization frequency. It can also just be a one-shot pulse. The system CPU can load each local counter with the time value that happens next time the synchronization pulse goes high (+ the known delay of the synchronization pulse traces). It can also just load the same approximate time value into all the local clock blocks (again + the known delay of the synchronization pulse traces) and load them in parallel. Then the local time can be adjusted to match the actual time by adjusting the local clock blocks using the ±1 ns function.

If the Save signal is triggered synchronously on all PHYs of the system, software can read the saved timestamp in each PHY and correct the time accordingly. On a blade with multiple PHYs, it is possible to connect the 1588_PPS_1 pin on one PHY to the 1588_LOAD_SAVE pin on the next PHY. If the routing delay (both internal chip delay and trace delay) is known, Microsemi recommends that the value saved in the next PHYs correspond to this delay.

If the global system clock is not synchronous, the PPM offset between system clock and the 1588 time progress can be calculated. This PPM offset can be used to calculate how many local-time-clocks is takes to reach a time offset of 1 ns and this value can be programmed into each local time block. The CPU still need to keep track of the smaller PPM offset and adjust the local time blocks with ± writes when necessary.

By measuring the skew between the 1 pps test output from each PHY, it is possible to measure the nominal correction values for the time counters in a system. These can be incorporated into the software of the system. Variations from system to system and temperature variations should be minimized by design.

3.12.14 Timestamp Update

The IEEE1588 block is also called the Time Stamp Update block (TSU) and supports the implementation of IEEE 1588v2 and ITU-T Y.1731 in PHY hardware by providing a mechanism for time-stamp update (PTP) and time-stamping (OAM).

The TSU block works with other blocks to identify PTP/OAM messages, process these messages, and insert accurate timestamp updates/timestamps where necessary. For 1588 timing distribution the

VSC8574-01 device supports ordinary clocks, boundary clocks, end-to-end transparent clocks, and peer-to-peer transparent clocks in a chassis based 1588 capable system. One-step and two-step processing is also supported. For details on the timing protocol, refer to IEEE 1588v2. For OAM details refer to ITU-T Y.1731 and G.8113.1/G.8113.2. The TSU block implements part of the functionality required for full 1588 compliance.

The 1588 protocol has four different types of messages that require action by the TSU: Sync, Delay_Req, Pdelay_Req, and Pdelay_Resp. These frames may be encapsulated in other protocols, several layers deep. The processor is able to detect PTP messages within these other protocols. The supported encapsulations are as follows:

- Ethernet
- UDP over IPv4
- UDP over IPv6
- MPLS
- Pseudo-wires
- PBB and PBB-TE tunnels
- IP/IP tunnel

OAM frames for delay measurement (1DM, DMM, and DMR) with the following supported encapsulations:

- Ethernet (Y.1731 Ethernet OAM)
- Ethernet in MPLS pseudo-wires (Y.1731 Ethernet OAM)
- MPLS-TP (G.8113.1 (~draft-bhh-mpls-tp-oam-y1731) and G.8113.2 (RFC6374))

The following illustration shows an overview of the supported PTP encapsulations. Note that the implementation is flexible such that encapsulations not defined here may also be covered.

Figure 40 • **PTP Packet Encapsulations**

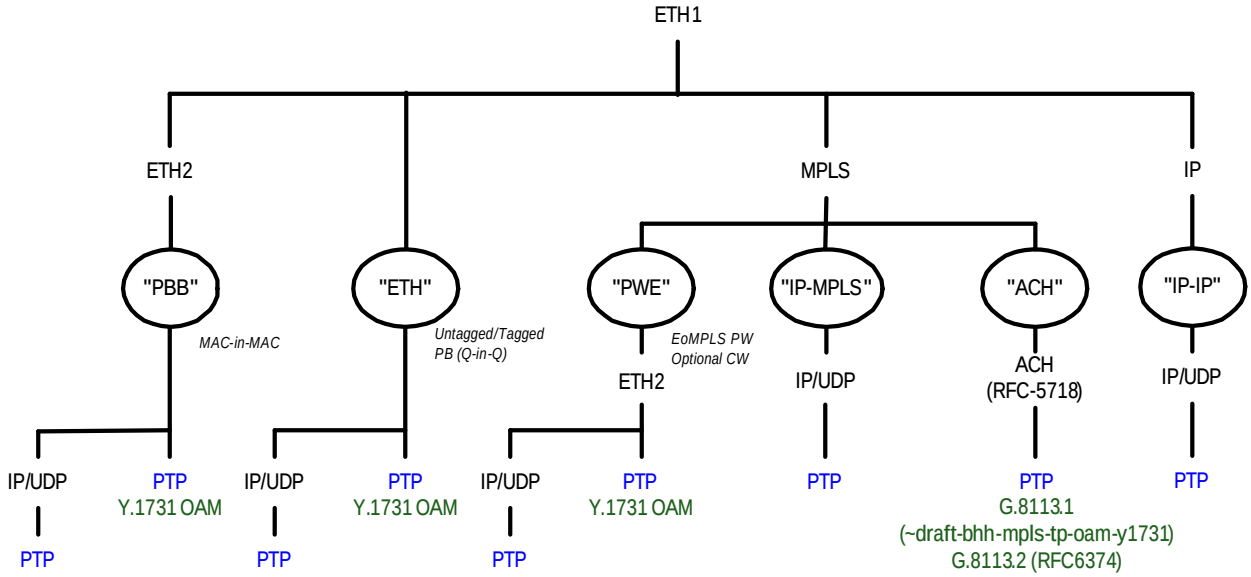

The following illustration shows the same overview of the supported encapsulations with the focus on OAM.

Figure 41 • **OAM Packet Encapsulations**

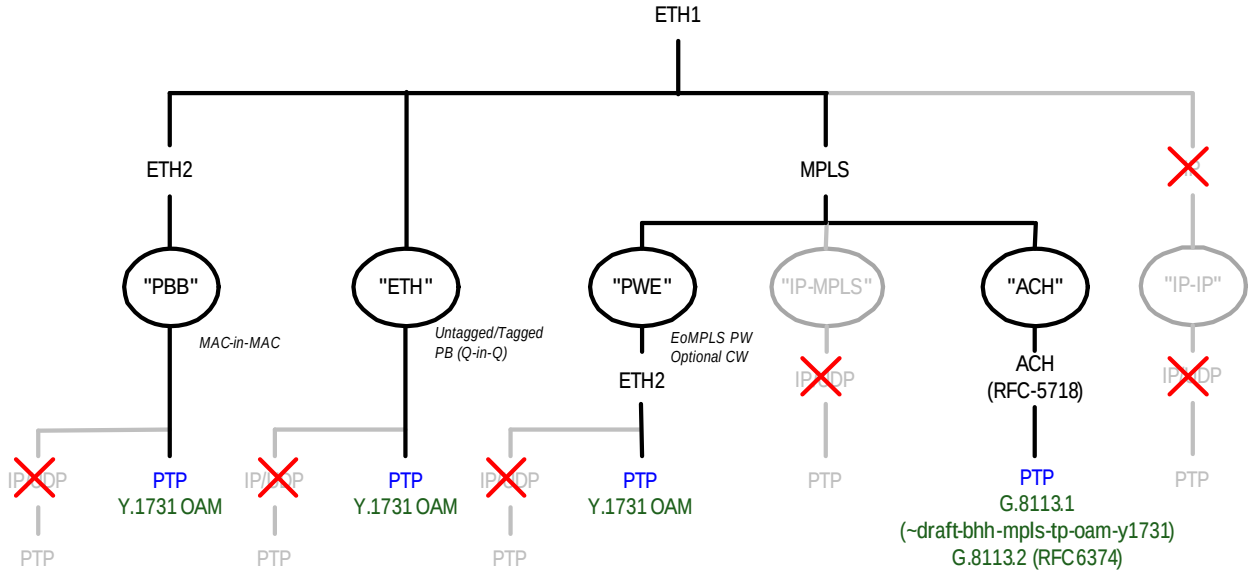

There is one TSU per channel in the VSC8574-01 device. The TSU detects and updates up to three different encapsulations of PTP/OAM. Non-matching frames are transferred transparently. This includes IFG, preamble, and SFD. For all frames there is no bandwidth expansion/shrink.

Once these frames are detected in the receive path, they are stamped with the ingress time and forwarded for further PTP/OAM processing. In the transmit path, the correction field of the appropriate PTP message (or the Rx and Tx fields of the OAM frame) is updated with the correct timestamp. A local time counter is maintained to provide the timestamps. Implementation of some of the 1588 protocol requires interaction with the TSU block over the CPU interface and external processing.

The system has an ingress processor, egress processor, and a local time counter. The ingress and egress processing logic blocks are identical except that the timestamp FIFO is only required in the egress direction because the CPU needs to know the actual timestamps of some of the transmitted PTP frames. The CPU reads the timestamps and any associated frame information out of the timestamp FIFO. The FIFO saves the generated timestamps along with information that uniquely identifies the frame to be read out by the CPU.

The ingress and egress processing blocks run on the same clock as the data paths for the corresponding directions. The local time counter is the primary reference clock for the system and it maintains the local reference time used by the TSU logic. It should be synchronized by an external entity. The block provides a method to load and view its value when the 1588_LOAD_SAVE pin is asserted. The block also provides a one pulse-per-second output signal with a programmable duty cycle. The local time counter runs at several clock frequencies.

The following illustration shows the block diagram of the TSU.

Figure 42 • **TSU Block Diagram**

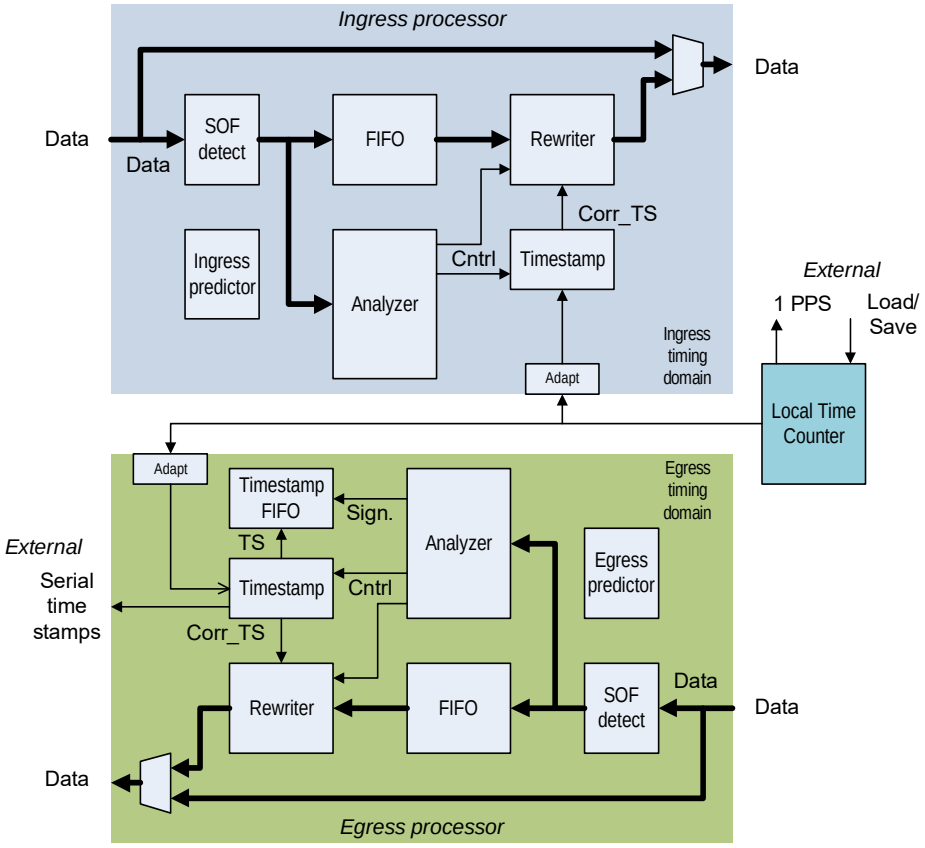

In both directions, the input data from the PHY layer is first fed to an SOF detect block. Data is then fed to both the programmable time-delay FIFO and the analyzer. The FIFO delays the data by the time needed to complete the operations necessary to update the PTP frame. That is, the data is delayed to the input of the rewriter so that the rewriter operations are known when the frame arrives. This includes the analyzer and timestamp processor block's functions.

The analyzer block checks the data stream and searches for PTP/OAM frames. When one is detected, it determines the appropriate operations to be performed based on the operating mode and the type of frame detected.

Note: The analyzer blocks of different channels share configuration registers and have identical setups.

The timestamp block waits for an SOF to be detected, captures a timestamp from the local time counter, and builds the new timestamp that is to be written into the PTP/OAM frame. Captured timestamps can be read by the CPU.

The rewriter block handles the actual writing of the new timestamp into the PTP/OAM frame. It is also able to clear parts of the frame such as the UDP checksum, if required, or it can update the frame to ensure that the UDP checksum is correct (for IPv6 PTP frames). The block also calculates the new FCS to be written to the PTP frame after updating the fields with the new timestamp.

The VSC8574-01 device has variable latency in the PCS block. These variations are predicted and used to compensate/maximize the accuracy of the 1588 timestamp logic.

If the time stamp update function is not used the block can be bypassed. When the TSU is bypassed, the block can be configured and then enabled and taken out of bypass mode. The change in bypass mode takes effect only when an IDLE is in the bypass register. This allows the TSU block to be switched on without corrupting data.

Pause frames pass unmodified through the TSU, but the latency may cause a violation of the allowed pause flow-control latency limits per IEEE 802.3.

3.12.15 Analyzer

The packet analyzer parses incoming packets looking for PTP/OAM frames. It determines the offset of the correction field within the packet for all PTP frames/for the time stamp in Y.1731 OAM frames. The analyzer has the following characteristics:

- Can compare against two different filter sets plus one optimized for OAM
- Each filter targets PTP or OAM frames
- Flexible comparator sequence with fixed start (Ethernet/SNAP) and end (PTP/OAM) comparator. Configurable intermediate comparators (Ethernet/SNAP, 2x IP/UDP/ACH, and MPLS)

The following illustration shows a block diagram of the analyzer.

Figure 43 • **Analyzer Block Diagram**

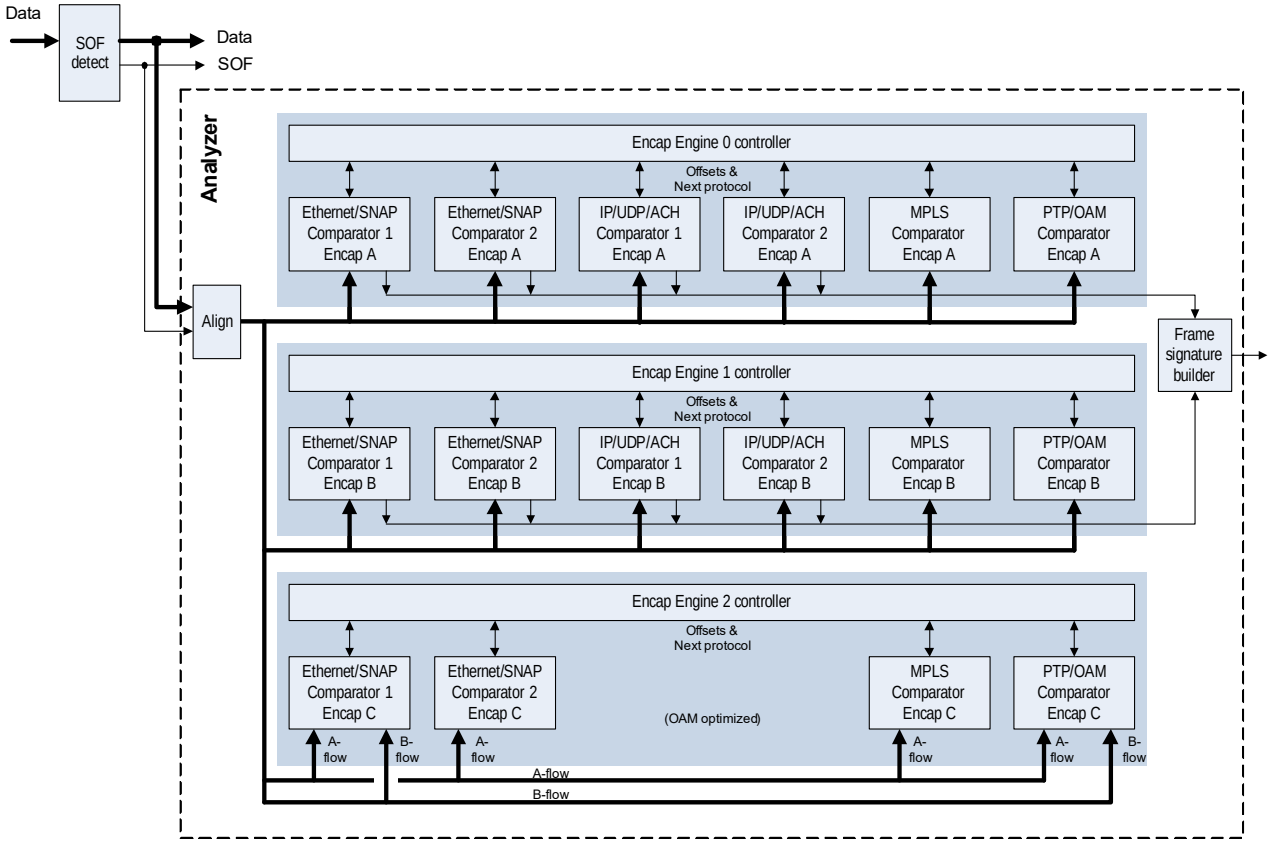

The analyzer process is divided into engines and stages. Each engine represents a particular encapsulation stack that must be matched. There are up to six stages in each engine. Each stage uses a comparator block that looks for a particular protocol. The comparison is performed stage-by-stage until the entire frame header has been parsed.

Each engine has its own master enable, so that it can be shut down for major reconfiguration, such as changes in encapsulation order, without stopping traffic. Other enabled engines are not affected.

The SOF detect block searches for the SFD in the preamble and uses that to indicate the SOF position. This information is carried along in the pipeline and also passed to the analyzer.

The first stage of the analyzer is a data path aligner that aligns the first byte of the packet (without the preamble & SFD) to byte 0 of the analyzer data path.

The encapsulation engine handles numerous types of encapsulation stacks. These can be broken down to their individual protocols, and a comparator is defined for each type. The order in which these are applied is configurable. Each comparator outputs a pattern/flow match bit and an offset to the start of the next protocol. The cumulative offset points to the time stamp field.

The sequence in which the protocol comparators are applied is determined by configuration registers associated with each comparator and the transfer of parameters between comparators is controlled by the encapsulation engine controller.

It receives the pattern match and offset information from one comparator stage and feeds the start-of-protocol position to the next comparator. This continues until the entire encapsulation stack has been parsed and always ends with the PTP/OAM stage or until a particular comparator stage cannot find a match in any of its flows. If at any point along the way no valid match is found in a particular stage, the analyzer sends the NOP communication to the timestamp block indicating that this frame does not need modification and that it should discard its timestamp.

There are two types of engines in the analyzer, one optimized for PTP frames and the other optimized for OAM frames. The two engine types are mostly identical except that the IP comparators are removed from the OAM engines. The following table shows the comparator layout per engine type and the number of flows in each comparator. There are two PTP engines and one OAM engine in each analyzer. Additional differences in the Ethernet and MPLS blocks are defined in their respective sections. For more information, see Ethernet/SNAP/LLC Comparator, page 48 and MPLS Comparator, page 52.

Table 6 • **Flows Per Engine Type**

	Number of Flows	
Comparator	**PTP Engine**	**OAM Engine**
Ethernet 1	8	8
Ethernet 2	8	8
MPLS	8	8
IP/ACH 1	8	0
IP/ACH 2	8	0
PTP/OAM	6	6

Each comparator stage has an offset register that points to the beginning of the next protocol relative to the start of the current one. The offset is in bytes, and the first byte of the current protocol counts as byte 0. As an example, the offset register for a stage would be programmed to 10 when the header to match is 10 byte long. With the exception of the MPLS stage (offsets are automatically calculated in that stage), it is the responsibility of the programmer to determine the value to put in these registers. This value must be calculated based upon the expected length of the header and is not expected to change from frame-to-frame when matching a given flow.

Table 7 • **Ethernet Comparator: Next Protocol**

Parameter	Width	Description
Encap_Engine_ENA	1 bit	For each encapsulation engine and enable bit that turns the engine on or off. The engine enables and disables either during IDLE (all 8 bytes must be IDLE) or at the end of a frame. If the enable bit is changed during the middle of a frame, the engine will wait until it sees either of those conditions before turning on or off.
Encap_Flow_Mode	1 bit	There is a separate bit for each engine. For each encapsulation engine: 1 = Strict flow matching, a valid frame must use the same flow IDs in all comparators in the engine except the PTP and MPLS comparators. 0 = A valid frame may match any enabled flow in all comparators If more than one encapsulation produces a match, the analyzer sends NOP to the rewriter and sets a sticky bit.

The following table shows the ID codes comparators use in the sequencing registers. The PTP packet target encapsulations require only up to five comparators.

Table 8 • **Comparator ID Codes**

ID	Name	Sequence
0	Ethernet Comparator 1	Must be the first
1	Ethernet Comparator 2	Intermediate
2	IP/UDP/ACH Comparator 1	Intermediate
3	IP/UDP/ACH Comparator 2	Intermediate
4	MPLS Comparator	Intermediate
5	PTP/OAM Comparator	Must be the last

The following sections describe the comparators. The frame format of each comparator type is described first, followed by match/mask parameter definition. All upper and lower bound ranges are inclusive and all match/mask registers work the same way. If the corresponding mask bit is 1, then the match bit is compared to the incoming frame. If a mask bit is 0, then the corresponding match bit is ignored (a wildcard).

3.12.15.1 Ethernet/SNAP/LLC Comparator

There are two such comparators in each engine. The first stage of each engine is always an Ethernet/SNAP/LLC comparator. The other comparator can be configured to be at any point in the chain.

Ethernet frames can have multiple formats. Frames that have an actual length value in the ether-type field (Ethernet type I) can have one of three formats: Ethernet with an EtherType (Ethernet type II), Ethernet with LLC, or Ethernet with LLC & SNAP. Each of these formats can be compounded by having one or two VLAN tags.

TYPE II ETHERNET

Type II Ethernet is the most common and basic type of Ethernet frame. The Length/EtherType field contains an EtherType value and either 0, 1, or 2 VLAN tags. Both VLAN can be of type S/C (with EtherType 0x8a88/0x8100). The payload would be the start of the next protocol.

Figure 44 • **Type II Ethernet Basic Frame Format**

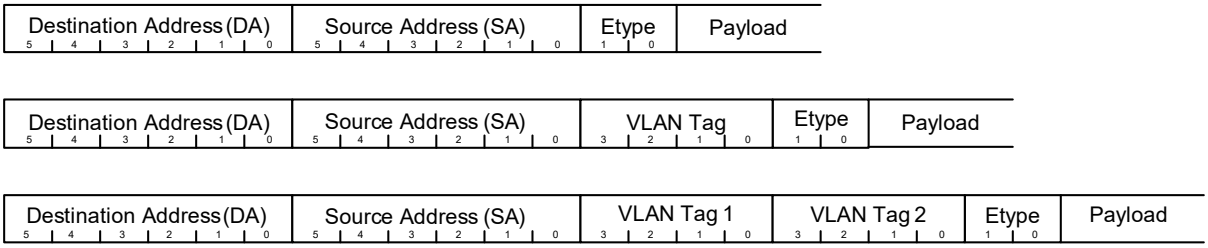

Ethernet with LLC and SNAP

If an Ethernet frame with LLC contains a SNAP header, it always follows a three-octet LLC header. The LLC values for DSAP & SSAP are either 0xAA or 0xAB and the control field contains 0x03. The SNAP header is five octets long and consists of two fields, the 3-octet OUI value and the 2-octet EtherType. As with the other types of Ethernet frames, this format can have 0, 1, or 2 VLAN tags. The OUI portion of the SNAP header is hard configured to be 0 or 0xf8.

The following illustration shows an Ethernet frame with a length in the Length/EtherType field, an LLC header, and a SNAP header.

Figure 45 • **Ethernet Frame with SNAP**

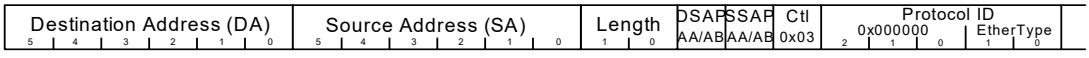

The following illustration shows an Ethernet frame with an LLC/SNAP header and a VLAN tag in the SNAP header. The Ethertype in the SNAP header is the VLAN identifier and tag immediately follows the SNAP header.

Figure 46 • **Ethernet Frame with VLAN Tag and SNAP**

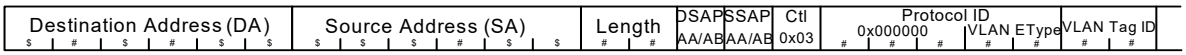

The following illustration shows the longest form of the Ethernet frame header that needs to be supported: two VLAN tags, an LLC header, and a SNAP header.

Figure 47 • **Ethernet Frame with VLAN Tags and SNAP**

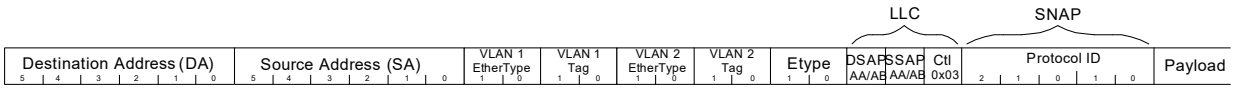

PBB (PROVIDER BACKBONE BRIDGING) SUPPORT

The provider backbone bridging protocol is supported using two Ethernet comparator blocks back-to-back. The first portion of the frame has a type II Ethernet frame with either 0 or 1 VLAN tags followed by an I-tag. The following illustrations show two examples of the PBB Ethernet frame format.

Figure 48 • **PBB Ethernet Frame Format (No B-Tag)**

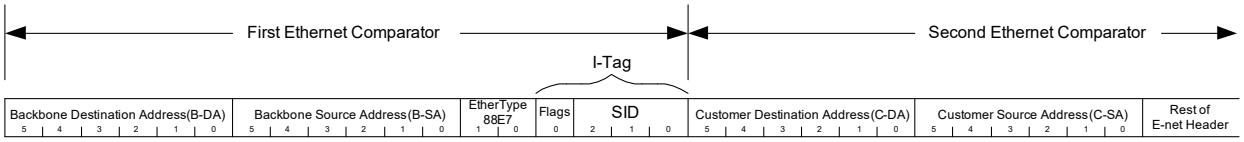

Figure 49 • **PBB Ethernet Frame Format (1 B-Tag)**

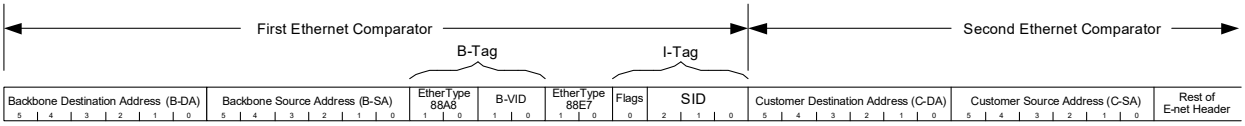

Ethernet Comparison

The Ethernet comparator block has two forms of comparison, as follows:

- Next protocol comparison is common for all flows in the comparator. It is the single set of registers and is used to verify what the next protocol in the encapsulated stack will be.
- Flow comparison is used to match any of the possible flows within the comparator.

Ethernet Next Protocol Comparison

The next protocol comparison field looks at the last EtherType field in the header (there can be multiple in the header) to verify the next protocol. It may also look at VLAN tags and the EtherType field when it is used as a length. Each has a pattern match/mask or range, and an offset.

The following table lists the next protocol parameters for the Ethernet comparator.

Table 9 • **Ethernet Comparator (Next Protocol)**

Parameter	Width	Description
Eth_Nxt_Comparator	3 bit	Pointer to the next comparator.
Eth_Frame_Sig_Offset	5 bit	Points to the start of the field used to build the frame signature.
Eth_VLAN-TPID_CFG	16 bit	Globally defines the value of the TPID for an S-tag, B-tag, or any other tag type other than a C-tag or I-tag.

Table 9 • **Ethernet Comparator (Next Protocol)**

Parameter	Width	Description
Eth_PBB_ENA	1 bit	Configures if the packet carries PBB or not. This configuration bit is only present in the first Ethernet comparator block. PBB is disabled in Ethernet comparator block 2.
Eth_Etype_Match_Enable	1 bit	Configures if the Ethertype field match register is used or not. Only valid when the packet is a type II Ethernet packet.
Eth_Etype_Match	16 bit	If the packet is a type II Ethernet packet and Eth_Etype_Match_Enable is a 1, the Ethertype field in the packet is compared against this value.

Ethernet Flow Comparison

The Ethernet flow is determined by looking at VLAN tags and either the source address (SA) or the destination address (DA). There are a configurable number of these matched sets. The following table lists the flow parameters for the Ethernet comparator.

Table 10 • **Ethernet Comparator (Flow)**

Parameter	Width	Description
Eth_Flow_Enable	1 bit/flow	0 = Flow disabled 1 = Flow enabled
Eth_Channel_Mask	1 bit/channel/flow	0 = Do not use this flow match group for this channel 1 = Use this flow match group for this channel
Eth_VLAN_Tags	2 bit	Configures the number of VLAN tags in the frame (0, 1, or 2)
Eth_VLAN_Tag1_Type	1 bit	Configures the VLAN tag type for VLAN tag 1 If PBB is not enabled: 0 = C-tag, value of 0x8100 1 = S-tag, match to the value in CONF_VLAN_TPID (global for all ports/directions) If PBB enabled: 0 = S-tag (or B-tag), to the value in CONF_VLAN_TPID (global for all ports/directions) There must be 2 VLAN tags, 1 S-tag and one I-tag 1 = I-tag
Eth_VLAN_Tag2_Type	1 bit	Configures the VLAN tag type for VLAN tag 2 If PBB is not enabled: 0 = C-tag, value of 0x8100 1 = S-tag, match to the value in CONF_VLAN_TPID (global for all ports/directions) If PBB enabled: The second tag is always an I-tag and this register control bit is not used. The second tag in PBB is always an I-tag.

Table 10 • **Ethernet Comparator (Flow)**

Parameter	Width	Description
Eth_Ethertype_Mode	1 bit	0 = Only type 2 Ethernet frames supported, no SNAP/LLC expected 1 = Type 1 & 2 Ethernet packets supported. Logic looks at the Ethertype/length field to determine the packet type. If the field is a length (less than 0x0600), then the packet is a type 1 packet and MUST include a SNAP & 3-byte LLC header. If the field is not a length, it is assumed to be an Ethertype and SNAP/LLC must not be present
Eth_VLAN_Verify_Ena	1 bit	0 = Parse for presence of VLAN tags but do not check the values. For PBB mode, the I-tag is still always checked. 1 = Verify the VLAN tag configuration including number and value of the tags.
Eth_VLAN_Tag_Mode	2 bit	0 = No range checking on either VLAN tag 1 = Range checking on VLAN tag 1 2 = Range checking on VLAN tag 2
Eth_Addr_Match	48 bit	Matches an address field selected by Eth_Addr_Match_Mode
Eth_Addr_Match_Select	2 bit	Selects the address to match 0 = Match the destination address 1 = Match the source address 2 = Match either the source or destination address 3 = Reserved, do not use
Eth_Addr_Match_Mode	3 bits per flow	Selects the address match mode. One or multiple bits can be set in this mode register allowing any combination of match types. For unicast or multicast modes, only the MSB of the address field is checked (0 = unicast; 1 = multicast). See section 3.2.3.1 of 802.3 for more details. 0 = Match the full 48-bit address 1 = Match any unicast address 2 = Match any multicast address
Eth_VLAN_Tag1_Match	12 bit	Match field for the first VLAN tag (if configured to be present).
Eth_VLAN_Tag1_Mask	12 bit	Mask for the first VLAN tag. If a match set is not used, set this register to all 0s.
Eth_VLAN_Tag2_Match	12 bit	Match field for the update VLAN tag (if configured to be present).
Eth_VLAN_Tag2_Mask	12 bit	Mask for the second VLAN tag. If a match set is not used, set this register to all 0s.
Eth_VLAN_Tag_Range_Upper	12 bit	Upper limit of the range for one of the VLAN fields selected by ETH_VLAN_TAG_MODE register. If PBB mode is enabled, this register is not used for range checking but rather is the upper 12 bit of the I-tag.
Eth_VLAN_Tag_Range_Lower	12 bit	Lower limit of the range for one of the VLAN fields selected by ETH_VLAN_TAG_MODE register. If PBB mode is enabled, this register is not used for range checking but rather is the lower 12 bit of the I-tag SID.

Table 10 • **Ethernet Comparator (Flow)**

Parameter	Width	Description
Eth_Nxt_Prot_Grp_Sel	1 bit	Per flow, maps a particular flow to a next-protocol group register set. This register only appears in the Ethernet block in the OAM-optimized engine.

If the Ethernet block is part of the OAM optimized engine, there are two sets of next-protocol configuration registers. Both sets are identical except one has an _A suffix and the other has a _B suffix. In the per-flow registers an additional register, ETH_NXT_PROT_SEL, is included to map a particular flow with a set of next protocol register set. This function allows the Ethernet block within the OAM-optimized engine to act like two separate engines with a configurable number of flows assignable to each with a total maximum number of eight flows. It effectively allows two separate protocol encapsulation stacks to be handled within the engine.

3.12.15.2 MPLS Comparator

The MPLS comparator block counts MPLS labels to find the start of the next protocol. The MPLS header can have anywhere from 1 to 4 labels. Each label is 32 bit long and has the format shown in the following illustration.

Figure 50 • **MPLS Label Format**



The S bit is used to indicate the last label in the stack, as follows: If S = 0, then there is another label. If S = 1, then this is the last label in the stack.

Also, the MPLS stack can optionally be followed by a control word (CW). This is configurable per flow.

The following illustration shows a simple Ethernet packet with either one label or three labels and no control word.

Figure 51 • **MPLS Label Stack within an Ethernet Frame**

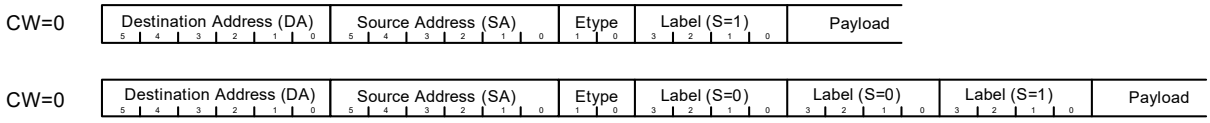

The following illustration shows an Ethernet frame with four labels and a control word. Keep in mind that this comparator is used to compare the MPLS labels and control words; the Ethernet portion is checked in the first stage.

Figure 52 • **MPLS Labels and Control Word**

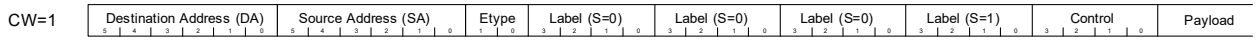

There could be VLAN tags between the SA and the Etype fields and, potentially, an LLC and SNAP header before the MPLS stack, but these would be handled in the Ethernet/LLC/SNAP comparator.

The only configuration registers that apply to all flows within the comparator are the match_mode register and the nxt_comparator register. The match mode register determines how the match filters are used and there is one per stage. Each flow has it own complete set of match registers.

Table 11 • **MPLS Comparator: Next Word**

Parameter	Width	Description
MPLS_Nxt_Comparator	3 bit	Pointer to the next comparator

Table 12 • **MPLS Comparator: Per-Flow**

Parameter	Width	Description
MPLS_Flow_Enable	1 bit per flow	0 = Flow disabled 1 = Flow enabled
MPLS_Channel_Mask	1 bit per channel per flow	0 = Do not use this flow match group for this channel 1 = Use this flow match group for this channel
MPLS_Ctl_Word	1 bit	Indicates if there is a 32-bit control word after the last label. This should only be set if the control word is not expected to be an ACH header. ACH headers are checked in the IP block. If the control word is a non-ACH control word, only the upper 4 bits of the control are checked and are expected to be 0. 0 = There is no control word after the last label 1 = There is expected to be a control word after the last label
MPLS_REF_PNT	1 bit	The MPLS comparator implements a searching algorithm to properly parse the MPLS header. The search can be performed from either the top of the stack or the end of the stack. 0 = All searching is performed starting from the top of the stack 1 = All searching if performed from the end of the stack
MPLS_STACK_DEPTH	4 bit	Each bit represents a possible stack depth, as shown in the following list. MPLS_STACK_DEPTH Bit — Allowed Stack Depth 0 — 1 1 — 2 2 — 3 3 — 4

Table 13 • **MPLS Range_Upper/Lower Label Map**

Parameter	MPLS_REF_PNT = 0, top-of-stack referenced	MPLS_REF_PNT=1, end-of-stack referenced
MPLS_Range_Upper/Lower_0	Top label	Third label before the end label
MPLS_Range_Upper/Lower_1	First label after the top label	Second label before the end label
MPLS_Range_Upper/Lower_2	Second label after the top label	First label before the end label
MPLS_Range_Upper/Lower_3	Third label after the top label	End label

The offset to the next protocol is calculated automatically. It is based upon the number of labels found and whether a control word is configured to be present. It points to the first octet after the last label or after the control word, if present.

Table 14 • **Next MPLS Comparator**

Parameter	Width	Description
MPLS_Range_Lower	20 bit × 4 labels	Lower value of the label range when range checking is enabled
MPLS_Range_Upper	20 bit × 4 labels	Upper value of the label range when range checking is enabled

If an exact label match is desired, set the upper and lower range values to the same value. If a label value is a don't care, then set the upper value to the maximum value and the lower value to 0.

The MPLS comparator block used in the OAM-optimized engine differs from the one used in the PTP-optimized engine.

Just like the Ethernet comparator block, there are two sets of next protocol blocks along with a next protocol association configuration field per-flow. This allows two different encapsulations to occur in a single engine.

Table 15 • **Next-Protocol Registers in OAM-Version of MPLS Block**

Parameter	Width	Description
MPLS_Nxt_Prot_Grp_Sel	1 bit per flow	Maps each flow to next-protocol-register set A or B

3.12.15.3 IP/UDP/ACH Comparator

The IP/UDP/ACH comparator is used to verify one of three possible formats, IPv4, IPV6, and ACH. Additionally, IPv4 and IPv6 can also have a UDP header after the IP header. There are two of these comparators and they can operate at stages 2, 3, or 4 of the analyzer pipeline. Note that if there is an IP-in-IP encapsulation, a UDP header will only exist with the inner encapsulation.

3.12.15.4 IPv4 Header Format

The following illustration shows an IPv4 frame header followed immediately by a UDP header. IPv4 does not always have the UDP header, but the comparator is designed to work with or without it. The Header Length field is used to verify the offset to the next protocol. It is a count of 32-bit words and does not include the UDP header. If the IPv4 frame contains a UDP header, the Source and Destination ports are also checked. These values are the same for all flows within the comparator. Note that IPv4 options, extended headers, and UDP fragments are not supported.

Figure 53 • **IPv4 with UDP**

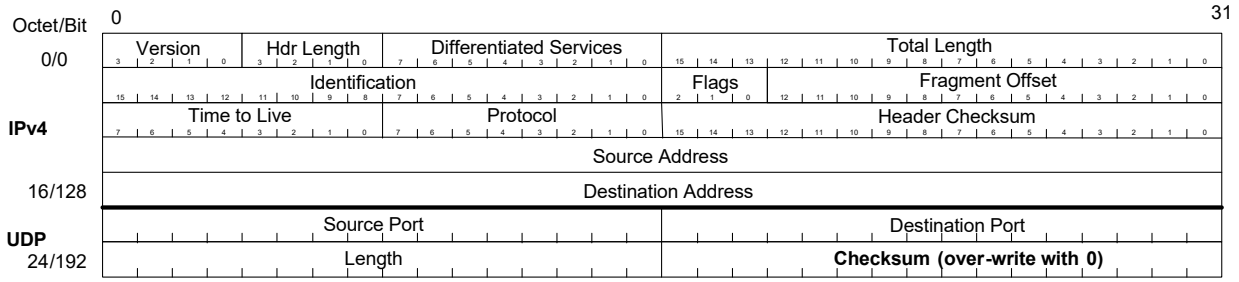

Note: Checksum over-write with 0 occurs on ingress only. PTP applications that generate 1588 frames with this format are responsible for creating IPv4/UDP frames with a zeroed checksum upon generation from the application.

Per flow validation is performed on the Source or Destination Address in the IPv4 header. The comparator can be configured to indicate a match in the flow if the source, destination, or either the source or destination fields match.

3.12.15.5 IPv6 Header Format

The following illustration shows an IPv6 frame header followed immediately by a UDP header. IPv6 does not always have the UDP header, but the comparator is designed to work with or without it. The Next Header field is used to verify the offset to the next protocol. It is a count of 32-bit words and does not include the UDP header. If the IPv6 frame contains a UDP header, the Source and Destination ports are also checked. These values are the same for all flows within the comparator.

Figure 54 • **IPv6 with UDP**

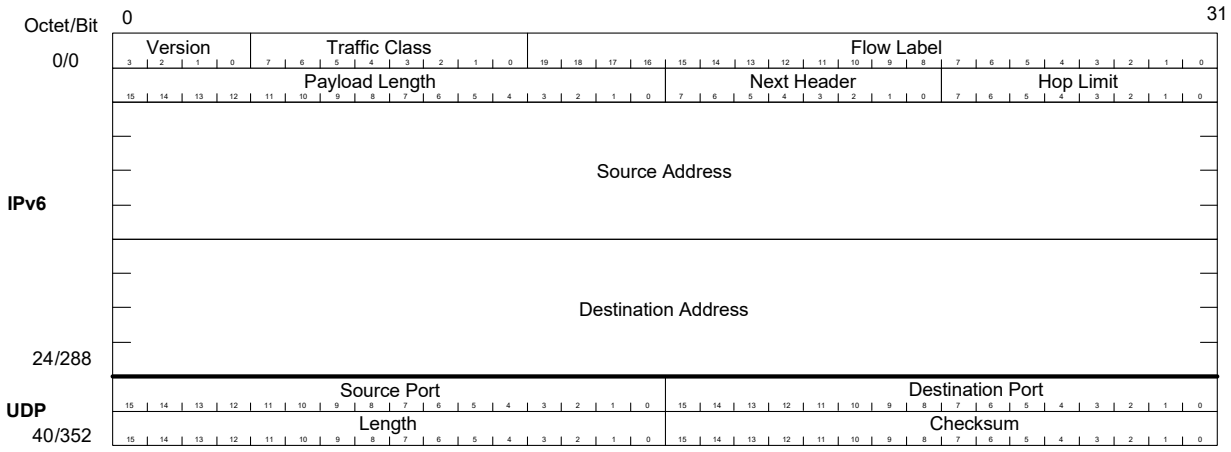

Per flow validation is performed on the Source or Destination Address in the IPv6 header. The comparator can be configured to indicate a match in the flow if the source, destination, or either the source or destination fields match.

If the IPv6 frame is the inner most IP protocol, then the checksum field must be valid. This is accomplished using a pair of pad bytes after the PTP frame. The checksum is computed using one's compliment of the one's compliment sum of the IPv6 header, UDP header, and payload including the pad bytes. If any of the fields in the frame are updated, the pad byte field at the end of the frame will be updated by the PHY so that the checksum field does not have to be modified.

Note: IPv6 extension headers are not supported.

3.12.15.6 ACH Header Format

The following illustrations show ACH headers. They can appear after a MPLS label stack in place of the control word. ACH is verified as a protocol only. There are no flows within the protocol for ACH. The ACH header can optionally have a Protocol ID field. The protocol is verified using the Version, Channel type, and optional Protocol ID field.

Figure 55 • **ACH Header Format**

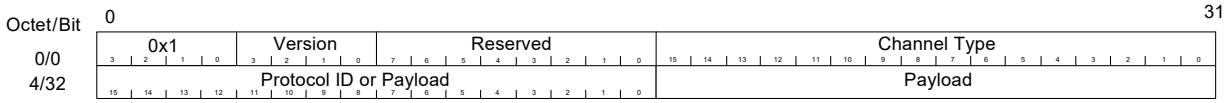

Figure 56 • **ACH Header with Protocol ID Field**

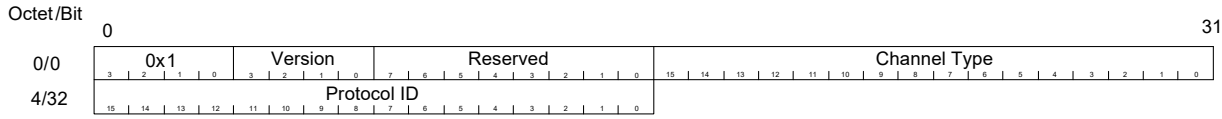

3.12.15.7 IPSec

IPSec adds security to the IP frame using an Integrity Check Value (ICV), a variable-length checksum that is encoded with a special key. The key value is known by the sender and the receiver, but not any of the devices in between. A frame must have a correct ICV to be valid. The sequence number field is a continuously incrementing value that is used to prevent replay attacks (resending a known good frame).

Little can be done with frames when IPSec is used because the 1588 block cannot recalculate the ICV and the frame cannot be modified on egress. Therefore, one-step processing cannot be performed, only two-step processing can be done. The only task here is to verify the presence of the protocol header. Stored timestamps in the TS FIFO are used to create follow-up messages. On ingress, the timestamp The following illustration shows the format of the IPSec frame. It normally appears between the IP header (IPv4 or IPv6) and the UDP header or at the start of the payload.

Figure 57 • **IPSec Header Format**

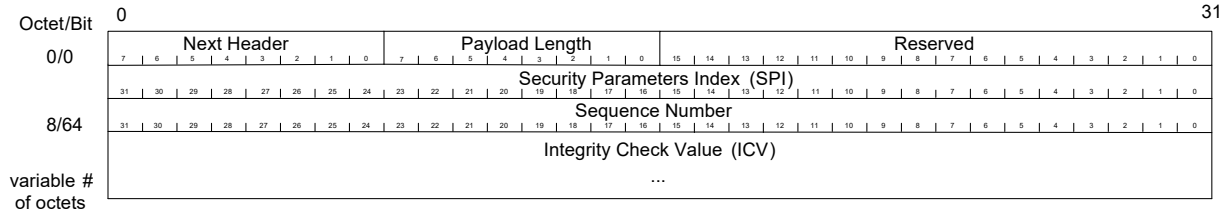

There is only one set of match/mask registers associated with IPSec and they are used to verify the presence of the IPSec header. The following illustration shows the largest possible IP frame header with IPv6, IPSec, and UDP.

Figure 58 • **IPv6 with UDP and IPSec**

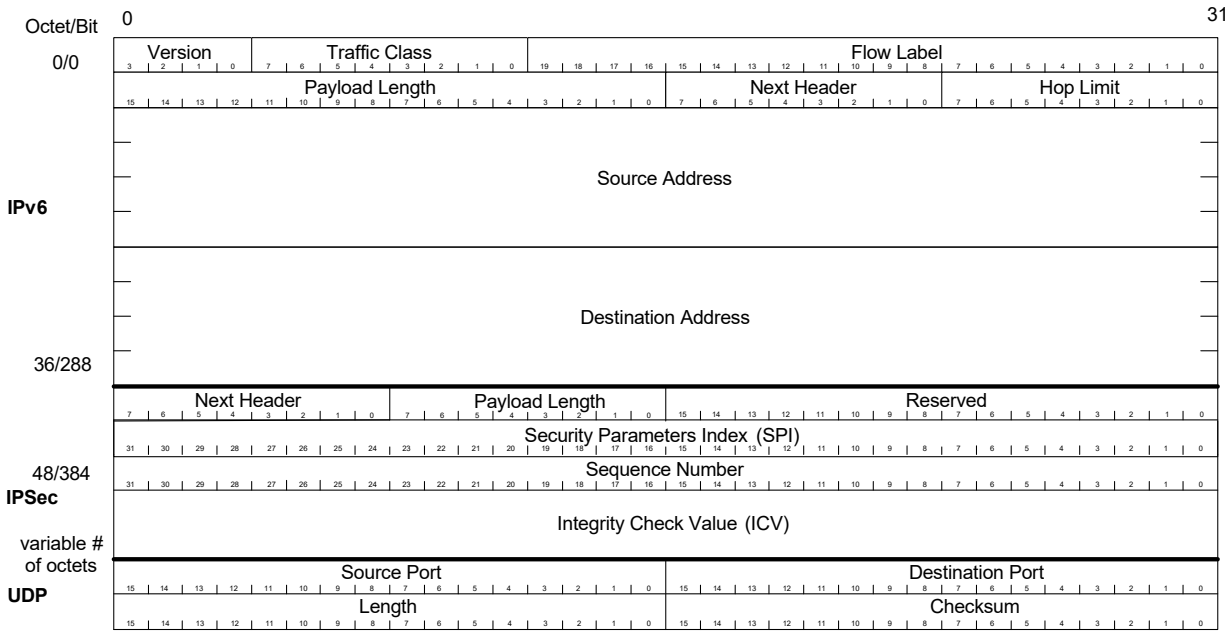

3.12.15.8 Comparator Field Summary

The following table shows a summary of the fields and widths to verify IPv4, IPv6, and ACH protocols.

Table 16 • **Comparator Field Summary**

Protocol	Next Protocol Fields	NPF Bit Widths	Flow Fields	Flow Bit Widths
IPv4	Header length	One 4-bit field	Source/ Destination Address	One 32-bit field
	UDP Source/Destination Port	One 32-bit field		
IPv6	Next header	One 8-bit field	Source/ Destination Address	One 128-bit field
	UDP Source/Destination Port	One 32-bit field		
ACH	Entire ACH header	One 64-bit field		
IPSec	Next Header/Payload Length/ SPI	One 64-bit field		

IP/ACH Comparator Next Protocol

The following table shows the registers used to verify the current header protocol and the next protocol. They are universal and cover IPv4, IPv6, and ACH. They can also be used to verify other future protocols.

Table 17 • **IP/ACH Next-Protocol Comparison**

Parameter	Width	Description
IP_Mode	2 bit	Specifies the mode of the comparator. If IPv4 or IPv6 is selected, the version field is automatically checked to be either 4 or 6 respectively. If another protocol mode is selected, then the version field is not automatically checked. In IPv4, the fragment offset field must be 0, and the MF flag bit (LSB of the flag field) must be 0. 0 = IPv4 1 = IPv6 2 = Other protocol, 32-bit address match 3 = Other protocol, 128-bit address match
IP_Prot_Match_1	8 bit	Match bit for Protocol field in IPv4 or next header field in IPv6
IP_Prot_Mask_1	8 bit	Mask bits for IP_Prot_Match_1. For each bit, if it is a 1, the corresponding match bit is valid. If it is 0, the corresponding match bit is ignored. Disable this match/mask set by setting the mask register to all 0's.
IP_Prot_Offset_1	5 bit	Indicates the starting position relative to the beginning of the IP frame header to start matching for the match/mask 1 register pair.
IP_Prot_Match_2	64 bit	Match bits for the IPSec header or any other desired field. For ACH, this register should be used to match the ACH header.
IP_Prot_Mask_2	64 bit	Mask bits for IP_Prot_Match_2. For each bit, if it is a 1, the corresponding match bit is valid. If it is 0, the corresponding match bit is ignored. Disable this match/mask set by setting the mask register to all 0's.
IP_Prot_Offset_2	7 bit	Indicates the starting position relative to the beginning of the IP frame header to start matching for the match/mask two-register pair.
IP_Nxt_Protocol	8 bit	Points to the start of the next protocol relative to the beginning of this header. It is the responsibility of the programmer to determine this offset, it is not calculated automatically. Each flow within an encapsulation engine must have the same encapsulation order and each header must be the same length. This field is current protocol header length in bytes.
IP_Nxt_Comparator	3 bit	Pointer to the next comparator. 0 = Reserved 1 = Ethernet comparator 2 2 = IP/UDP/ACH comparator 1 3 = IP/UDP/ACH comparator 2 4 = Reserved 5 = PTP/OAM comparator 6,7 = Reserved
IP_Flow_Offset	5 bit	Indicates the starting position relative to the beginning of the IP frame header to start matching for the flow match/mask register pair. When used with IPv4 or 6, this will point to the first byte of the source address. When used with a protocol other that IPv4 or 6, this register points to the beginning of the field that will be used for flow matching.

Table 17 • **IP/ACH Next-Protocol Comparison**

Parameter	Width	Description
IP_UDP_Checksum_Clear_Ena	1 bit	If set, the 2-byte UDP checksum should be cleared (written with zeroes). This would only be used for UDP in IPv4.
IP_UDP_Checksum_Update_Ena	1 bit	If set, the last two bytes in the UDP frame must be updated to reflect changes in the PTP or OAM frame. This is necessary to preserve the validity of the IPv6 UDP checksum. Note that IP_UDP_Checksum_Clear_Ena & IP_UDP_Checksum_Update_Ena should never be set at the same time.
IP_UDP_Checksum_Offset	8 bit	This configuration field is only used if the protocol is IPv4. This register points to the location of the UDP checksum relative to the start of this header. This info is used later by the PTP/Y.1731 block to inform the rewriter of the location of the checksum in a UDP frame. This is normally right after the Log Message Interval field.
IP_UDP_Checksum_Width	2 bit	Specifies the length of the UDP checksum in bytes (normally 2 bytes)

The IP/ACH Comparator Flow Verification registers are used to verify the current frame against a particular flow within the engine. When this engine is used to verify IPv4 or IPv6 protocol, the flow is verified using either the source or destination address in the frame.

If the protocol is something other than IPv4 or IPv6, then the flow match can be used to match either a 32 or 128 bit field pointed to by the IP_Flow_Offset register. Mask bits can be used to shorten the length of the match, but there is no concept of source or destination address in this mode.

Table 18 • **IP/ACH Comparator Flow Verification Registers**

Parameter	Width	Description
IP_Flow_Ena	1 bit per flow	0 = Flow disabled 1 = Flow enabled
IP_Flow_Match_Mode	2 bit per flow	This register is only valid when the comparator block is configured to match on IPv4 or IPv6. It allows the match to be performed on the source address, destination address, or either address. 0 = Match on the source address 1 = Match on the destination address 2 = Match on either the source or the destination address
IP_Flow_Match	128 bit	Match bits for source & destination address in IPv4 & 6. Also used as the flow match for protocols other than IPv4 or 6. When used with IPv4, only the upper 32 bits are used and the remaining bits are not used.
IP_Flow_Mask	128 bit	Mask bits for IP_Flow_Match. For each bit, if it is a 1, the corresponding match bit is valid. If it is 0, the corresponding match bit is ignored.
IP_Channel_Mask	1 bit per channel per flow	Enable for this match set for this channel

Table 18 • **IP/ACH Comparator Flow Verification Registers**

Parameter	Width	Description
IP_Frame_Sig_Offset	5 bit	Points to the start of the field that will be used to build the frame signature. This register is only present in comparators where frame signature is supported. In other words, if there is no frame signature FIFO in a particular direction, this register will be removed.

3.12.15.9 PT/Y.1731 OAM Comparator

The PTP/OAM comparator is always the last stage in the analyzer for each encapsulation engine. It can validate IEEE 1588 PTP frames or Y.1731 OAM frames.

3.12.15.10PTP Frame Header

The following illustration shows the header of a PTP frame.

Figure 59 • **PTP Frame Layout**

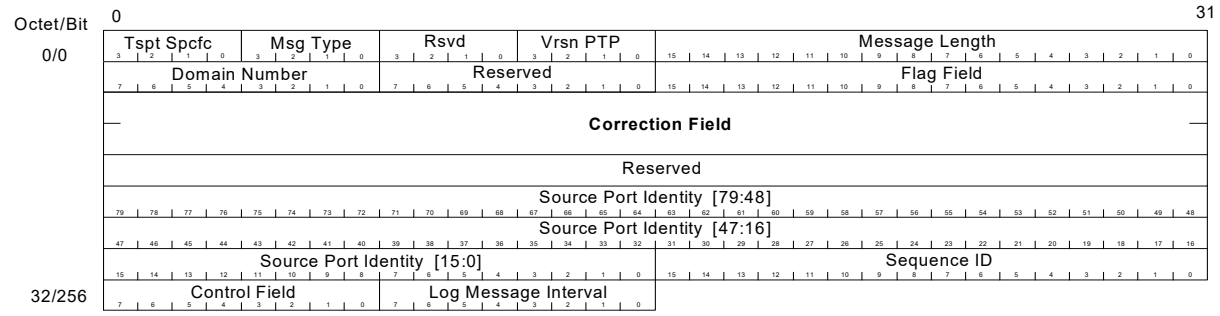

Unlike most of the other stages, there is no protocol validation for PTP frames; only interpretation of the header to determine what action to take. The first eight bytes of the header are used to determine the action to be taken. These match fields in the flow comparison registers with a corresponding set of command registers for each flow.

3.12.15.11Y.1731 OAM Frame Header

1DM, DMM, and DMR are the three supported Y.1731 frame headers. The following illustration shows the header part of a 1DM Y.1731 OAM frame.

Figure 60 • **OAM 1DM Frame Header Format**

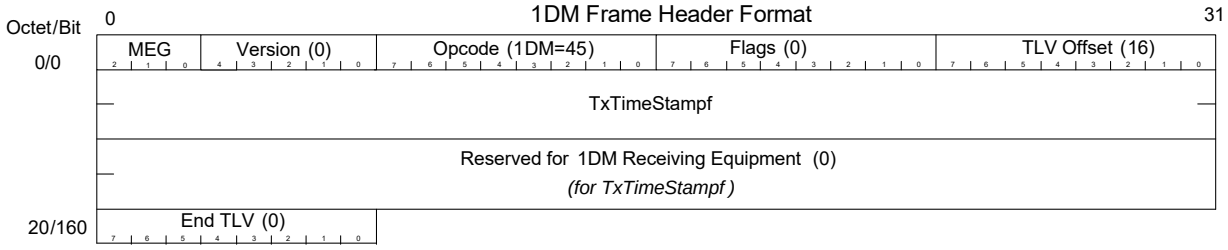

The following illustration shows a DMM frame header.

Figure 61 • **OAM DMM Frame Header Format**

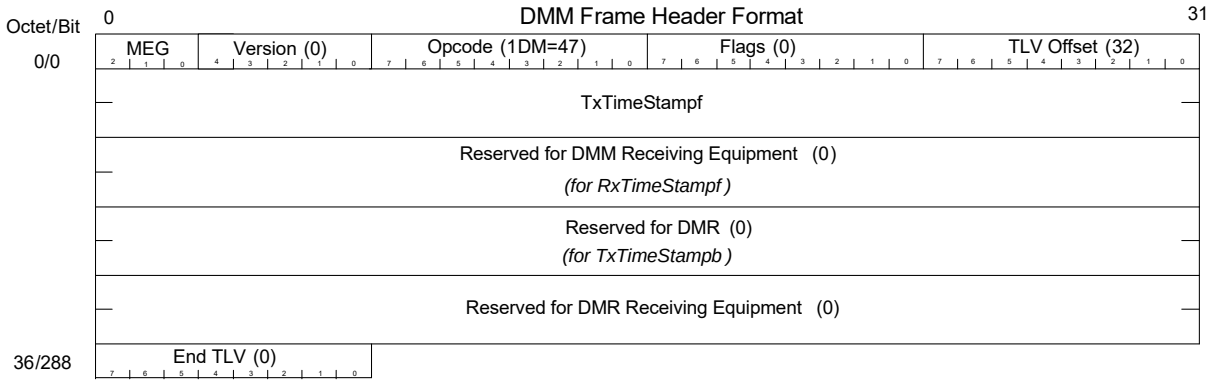

The following illustration shows a DMR frame header.

Figure 62 • **OAM DMR Frame Header Format**

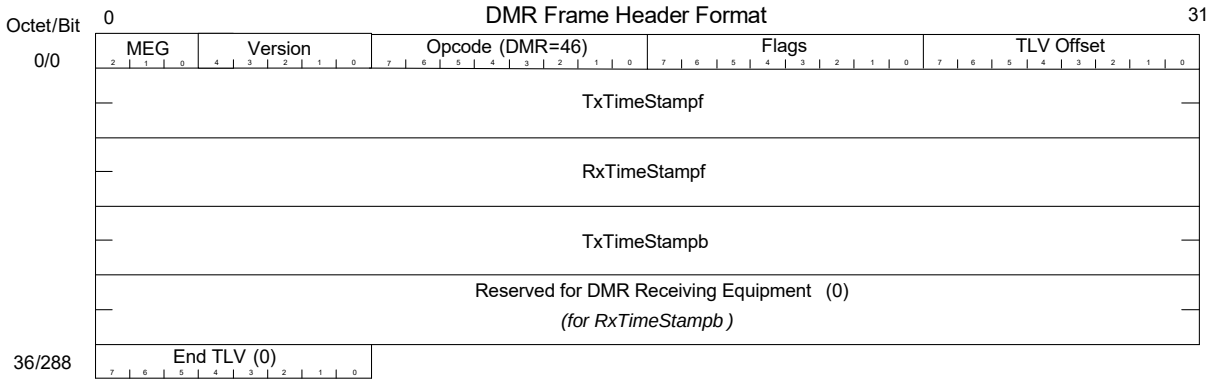

As with PTP, there is no protocol validation for Y.1731 frames; only interpretation of the header to determine what action to take. The first four bytes of the header are used to determine the action to be taken.

3.12.15.12PTP Comparator Action Control Registers

The following registers perform matching on the frame header and define what action is to be taken based upon the match. There is one mask register for all flows, and the rest of the registers are unique for each flow.

Table 19 • **PTP Comparison**

Parameter	Width	Description
PTP_Flow_Match	64 bit	Matches bits in the PTP/Y.1731 frame starting at the beginning of the protocol header
PTP_Flow_Mask	64 bit	Mask bits for PTP_Flow_Match
PTP_Domain_Range_Lower	8 bit	Lower range of the domain field to match
PTP_Domain_Range_Upper	8 bit	Upper range of the domain field to match
PTP_Domain_Range_ Enable	1 bit	Enable for range checking
PTP_Domain_Offset	5 bit	Pointer to the domain field, or whatever field is to be used for range checking

Table 19 • **PTP Comparison**

Parameter	Width	Description		
PTP_Action_Command	3 bit	**Command Value**	**Mnemonic**	**Action**
		0	NOP	Do nothing
		1	SUB	New correction field = Current correction field – Captured local time
		2	SUB_P2P	New correction field = Current correction field – Local latency + path_delay
		3	ADD	New correction field = Current correction field + Captured local time
		4	SUB_ADD	New correction field = Current correction field + (Captured local time + Local latency – Time storage field)
		5	WRITE_1588	Write captured local time to time storage field
		6	WRITE_P2P	Active_timestamp_ns = captured local time and path_delay written to time storage field and correction field (deprecated command)
		7	WRITE_NS	Write local time in nanoseconds to the new field
		8	WRITE_NS_P2P	Write local time in nanoseconds + p2p_delay to the new field and correction field
PTP_Save_Local_Time	1 bit	When set, saves the local time to the timestamp FIFO (only valid for egress ports).		
PTP_Correction_Field_Offset	5 bit	Points to the location of the correction field. Location is relative to the first byte of the PTP/OAM header.		
PTP_Time_Storage_Field_Offset	6 bit	Points to a location in a PTP frame where a time value can be stored or read.		
PTP_Add_Delay_Asymmetry_Enable	1 bit	When enabled, the value in the delay asymmetry register is added to the correction field of the frame.		
PTP_Subtract_Delay_Asymmetry_Enable	1 bit	When enabled, the value in the delay asymmetry register is subtracted from the correction field of the frame.		
PTP_Zero_Field_Offset	6 bit	Points to a location in the PTP/OAM frame to be zeroed if this function is enabled		
PTP_Zero_Field_Byte_Count	4 bit	The number of bytes to be zeroed. If this field is 0, then this function is not enabled.		

Table 19 • **PTP Comparison**

Parameter	Width	Description
PTP_Modified_Frame_Byte_Offset	3 bit	Indicates the position relative to the start of the PTP frame in bytes where the Modified_Frame_Status bit resides. This value is also used to calculate the offset from the beginning of the Ethernet packet to this field for use by the Rewriter.
PTP_Modified_Frame_Status_Update	1 bit	If set, tells the rewriter to update the value of this bit. Configuration registers inside the rewriter indicate if the bit will be set to 0 or 1.
PTP_Rewrite_Bytes	4 bits	Number of bytes in the PTP or OAM frame that must be modified by the Rewriter for the timestamp
PTP_Rewrite_Offset	8 bits	Points to where in the frame relative to the SFD that the timestamp should be updated
PTP_New_CF_Loc	8 bits	Location where the updated correction field value is written relative to the PTP header start
PTP_Channel_Mask	1 bit per channel per flow	Enable for this match set for this channel
PTP_Flow_Enable	1 bit	When set, the fields associated with this flow are all valid

The following table shows controls that are common to all flows.

Table 20 • **PTP Comparison: Common Controls**

Parameter	Width	Description
PTP_IP_CHKSUM_Sel	1 bit	0 = Use IP checksum controls from comparator 1 1 = Use IP checksum controls from comparator 2
FSB_Adr_Sel	2 bits	Selects the source of the address for use in the frame signature builder

The following table shows the one addition, per-flow, register.

Table 21 • **PTP Comparison: Additions for OAM-Optimized Engine**

Parameter	Width	Description
PTP_NXT_Prot_Group_Mask	2 bits	There are two bits for each flow. Each bit indicates if the flow can be associated with next-protocol group A or B. One or both bits may be set. If a bit is 1 for a particular next-protocol group, then a flow match is valid if the prior comparator stages also produced matches with the same next-protocol group.

3.12.15.13Future Protocol Compatibility

Except for MPLS, the comparators are not hardwired to their intended protocols. They can be used as generic field and range comparators because all of the offsets or pointers to the beginning of the fields are configurable. The IP comparator is the most generic and would probably be the first choice for validating a new protocol.

Additionally, if there are not enough comparison resources in a single comparator block to handle a new protocol, two comparators back-to-back can used by splitting up the comparison work. One portion can be validated in one comparator and then handed off to another. The only restriction is that there must

beat least one 64-bit word of separation between the start of the protocol and where the second starts to operate.

3.12.15.14Reconfiguration

There are three ways to perform reconfiguration:

1. Disable an entire encapsulation engine.
   Once an engine has been disabled, any of the configuration registers associated with it may be modified in any order. If other encapsulation engines are still active, they will still operate normally.
2. Disable a flow in an active engine.
   Each stage in the engine has an enable bit for each flow. If a flow is disabled in a stage, its registers may be modified. Once reconfiguration for a flow in a stage is complete, it can be enabled.
3. Disable a comparator.
   Each comparator within the active encapsulation engine can be disabled. The ETH1 comparator in all active encapsulation engines is always on and looks for the Ethernet header. If an Ethernet header according to the configuration TypeI or Type II with SNAP/LLC is not found then subsequent flows will not be matched. The ETH1 comparator cannot be disabled.

The disabling of engines and flows is always done in a clean manner so that partial matches do not occur. Flows and engines are always enabled or disabled during inter-packet gaps or at the end of a packet. This guarantees that when a new packet is received that it will be analyzed cleanly.

If strict flow matching is enabled and a flow is disabled in one of the stages, then the entire flow is automatically disabled.

If any register in a stage that applies to all flows needs to be modified, then the entire encapsulation engine must be disabled.

3.12.15.15Frame Signature Builder

Along with timestamp and CRC updates, the analyzer outputs a frame signature that can be stored in the timestamp FIFO to help match frames with other info in the FIFO. This information is used by the CPU so that it can match timestamps in the timestamp FIFO with actual frames. The frame signature is up to 16 bytes long and contains information from the Ethernet header (SA or DA), IP header (SA or DA), and from the PTP or OAM frame. The frame signature is only used in the egress direction.

The PTP block contains a set of mapping registers to configure which bytes are mapped into the frame signature. The following tables show the mapping for each byte.

Table 22 • **Frame Signature Byte Mapping**

Select	Source Byte
0-23	PTP header byte number = (31-select)
24	PTP header byte number 6
25	PTP header byte number 4
26	PTP header byte number 0
27	Reserved
28-35	Selected address byte (select-28)

Table 23 • **Frame Signature Address Source**

Parameter	Width	Description
FSB_Map_Reg_0-15	6 bits	For each byte of the frame signature, use Table 22, page 63 to select which available byte is used. Frame signature byte 0 is the LSB. If not all 16 bytes are needed, the frame signature should be packed towards the LSB and the upper unused byte configuration values do not need to be programmed.

Table 23 • **Frame Signature Address Source**

Parameter	Width	Description	
FSB_Adr_Sel	2 bits	Selects the source of the address for use in the frame signature builder according to the following list	
		Select Value	**Address Source**
		0	Ethernet block 1
		1	Ethernet block 2
		2	IP block 1
		3	IP block 2

Configuration registers in each comparator block supply an address to select if it is the source address or the destination address.

3.12.15.16 Configuration Sharing

The analyzer configuration services both channels. Each flow within each comparator has a channel-mask register that indicates which channels the flow is valid for. Each flow can be valid for channel A, channel B, or both channels.

The total of eight flows can be allocated the two channels if the analyzer configuration cannot be shared. They can each have four distinct flows (or three for the one, and five for the other, etc.).

3.12.15.17 OAM-Optimized Engine

In addition to the descriptions of the Ethernet and MPLS blocks in the OAM optimized engine, there is the notion of protocol-A/protocol-B. When a match occurs in the Ethernet 1 block the status of the protocol set that produced the match is indicated. There are two bits, one for protocol A and another for protocol B. If both sets produce a match, then both bits are set.

These bits are then carried to the next comparison block and only allow flow matches for the protocol sets that produced matches in the prior block. This block also produces a set of protocol match bits that are also carried forward.

This feature is provided to prevent a match with protocol set A in the first block and protocol set B in the second block.

3.12.16 Timestamp Processor

The primary function of the timestamp processor block is to generate a new Timestamp_field or new Correction_field (Transparent clocks) for the rewriter block. The timestamp block generates an output that is either a snapshot of the corrected Local Time (struct Timestamp) or a signed (two's complement) 64 bit Correction_field.

In the ingress direction the timestamp block calculates a new timestamp for the rewriter that indicates the earlier time when the corresponding PTP event frame entered the chip (crossed the reference plane referred to in the IEEE1588 standard).

In the egress direction the timestamp block calculates a new timestamp for the rewriter in time for the PCS block to transmit the new timestamp field in the frame. In this case the Timestamp field indicates when the corresponding PTP event frame will exit the chip.

Transparent clocks correct PTP event messages for the time resided in the transparent clock. Peer-to-Peer transparent clocks additionally correct for the propagation time on the inbound link (Path_delay). The Path_delay [ns] input to the timestamp block is software programmed based upon 1588 path delay measurements.

In general, the IEEE 1588 standard allows for a transparent clock to update the Correction_Field for both PTP event messages as well as the associated follow up message (for two-step operation). However, the TSP only updates PTP event messages. Also, the 1588 standard allows that end-to-end transparent clocks correct and forward all PTP-timing messages while Peer-to-Peer transparent clocks only correct and forward Sync and Follow_Up messages. Again, the TSP only updates PTP event messages (not Follow_Up messages).

Internally the timestamp block generates an Active_timestamp from the captured/timestamped Local time (Raw_timestamp). The Active_time stamp is the Raw_timestamp corrected for the both fixed (programmed) local chip, and variable chip latencies relative to where the Start_of_Frame_Indicator captures the local time. The timestamp block operates on the Active_timestamp based on the Command code.

The Active_timestamp is calculated differently in the Ingress and Egress directions and the equations are given below.

In the ingress direction:

```
Active_timestamp = Raw_timestamp - Local_latency - Variable_latency
```

In the egress direction:

```
Active_timestamp = Raw_timestamp + Local_latency + Variable_latency
```

In addition, the following values are also calculated for use by the commands:

```
Active_timestamp_ns = Active_timestamp converted to nanoseconds
Active_timestamp_p2p_ns = active_timestamp_ns + path delay
```

The Local_latency is a programmed fixed value while the Variable_latency is predicted from the PCS logic based upon the current state of the ingress or egress data pipeline.

For the option of Peer-to-Peer transparent clocks, the ingress Active_timestamp calculation includes an additional Path_delay component. The path delay is always added for a transparent clock per the standard. The path delay is always added to the correction field.

The signed 32-bit two's complement Delay Asymmetry register (bits 31–0) can be programmed by the user. Bit 31 is the sign bit. Bits 15–0 are scaled nanoseconds just like for the CorrectionField format. The DelayAsymmetry register (whether it be positive or negative) will be sign extended and added to the 64-bit correction field (signed add) if the Add_Delay_Asymmetry bit is set. The DelayAsymmetry register (whether it be positive or negative) will be sign extended and subtracted from the 64-bit correction field (signed Subtract) if the Subtract_Delay_Asymmetry bit is set.

The timestamp block keeps a shadow copy of the programmed latency values (Local_latency, Path_delay, and Delay_Asymmetry) to protect against CPU updates.

3.12.17 Timestamp FIFO

The Timestamp FIFO stores timestamps along with frame signature information. This information can be read out by a CPU or pushed out on a dedicated Serial Timestamp Output Interface and used in 2-step processing mode to create follow-up messages. The timestamp FIFO is only present in the egress data path.

The timestamp FIFO takes a frame signature from the analyzer and the updated correction field, and the full data set for that timestamp is saved to the FIFO. This creates an interrupt to the CPU. If the FIFO ever overflows this is indicated with an interrupt.

The stored frame signature can be of varying sizes controlled by the EGR_TSFIFO_CSR.EGR_TS_SIGNAT_BYTES register. Only the indicated number of signature bytes is saved with each timestamp. The saved values are packed so that reducing the number of signature bytes allows more timestamps to be saved.

The packing of the timestamp data is done by logic before the write occurs to the FIFO. When no compression is used, each timestamp may contain 208 bits of information consisting of 128 bits of frame signature and 80 bits of timestamp data. Therefore a full sized timestamp is 26 bytes long. Compressing the frame signature can reduce this to as little as 10 bytes (or 4 bytes if EGR_TSFIFO_CSR.EGR_TS_4BYTES = 1) if no signature information is saved (EGR_TSFIFO_CSR.EGR_TS_SIGNAT_BYTES = 0). The value to store is built up in an internal register. When the register contains 26 valid bytes, that data is written to the timestamp FIFO. Data in the FIFO is packed end-to-end. It is up to the reader of the data to unpack the data.

The timestamps in the FIFO are visible and accessible for the CPU as a set of 32-bit registers. Multiple register reads are required to read a full timestamp if all bits are used. Bit 31 in register EGR_TSFIFO_0 contains the current FIFO empty flag, which can be used by the CPU to determine if the current

timestamps are available for reading. If the bit is set, the FIFO is empty and no timestamps are available. The value that was read can be discarded because it does not contain any valid timestamp data. If the bit is 0 (deasserted), the value contains 16 valid data bits of a timestamp. The remaining bits should be read from the other registers in the other locations and properly unpacked to recreate the timestamp. Care should be taken to read the timestamps one at a time as each read of the last (7th) address will trigger a pop of the FIFO.

Timestamps are packed into seven registers named EGR_TSFIFO_0 to EGR_TSFIFO_6. If the timestamp FIFO registers are read to the point that the FIFO goes empty and there are remaining valid bytes in the internal packing register, then the packing register is written to the FIFO. In this case the registers may not be fully packed with timestamps. Flag bits are used to indicate where the valid data ends within the set of seven registers. The flag bits are in register EGR_TSFIFO_0.EGR_TS_FLAGS (together with the empty flag) and are encoded as follows:

000 = Only a partial timestamp is valid in the seven register set

001 = One timestamp begins in the current seven register set

010 = Two timestamps begin in the current seven register set.

011 = Three timestamps begin in the current seven register set (4-byte mode)

100 = Four timestamps begin in the current seven register set (4-byte mode)

101 = Five timestamps begin in the current seven register set (4-byte mode)

110 = Six timestamps begin in the current seven register set (4-byte mode)

111 = The current seven register set is fully packed with valid timestamp data

The FIFO empty bit is visible in the EGR_TSFIFO_0.EGR_TS_EMPTY register so the CPU can poll this bit to know when timestamps are available. There is also a maskable interrupt which will assert whenever the timestamp FIFO level reaches the threshold given in EGR_TSFIFO_CSR.EGR_TS_THRESH register. The FIFO level is also visible in the EGR_TSFIFO_CSR.EGR_TS_LEVEL register. If the timestamp FIFO overflows, writes to the FIFO are inhibited. The data in the FIFO is still available for reading but new timestamps are dropped.

Note: Timestamp FIFO exists only in the Egress direction. There is no Timestamp FIFO in the Ingress direction

3.12.18 Serial Timestamp Output Interface

For each 1588 Processor 0 and 1, timestamp information stored in the Egress direction can be read through either the register interface or through the Serial Timestamp interface. These two ways to read registers are mutually exclusive. While enabling/disabling the serial interface is done on a Processor level, only one serial interface exists. This means the serial interface can be enabled for Processor 0, while the timestamp FIFO can be read through registers for Processor 1. If the serial interface is enabled for both Processor 0 and 1, then the serial interface will arbitrate between two Egress Timestamp FIFOs in Processor 0 and 1 and push the data out.

The timestamp FIFO serial interface block writes, or pushes, timestamp/frame signature pairs that have been enqueued and packed into timestamp FIFOs to the external chip interface consisting of three output pins: 1588_SPI_DO, 1588_SPI_CLK, and 1588_SPI_CS. There is one interface for all channels.

When the serial interface (SPI) is enabled, the timestamp/frame signature pairs are dequeued from timestamp FIFO(s) and unpacked. Unpacked timestamp/frame signature pairs are then serialized and sent one at a time to the external interface. Unpacking shifts the timestamp/frame signature into alignment considering the configured size of the timestamps and frame signatures (a single SI write may require multiple reads from a timestamp FIFO). The timestamp FIFO serial interface is an alternative to the MDIO register interface described in the timestamp FIFO section. When the serial timestamp interface is enabled in register TS_FIFO_SI_CFG.TS_FIFO_SI_ENA, data read from the timestamp FIFO registers described in Timestamp FIFO, page 65 are invalid.

Timestamp/Frame signature pairs from two egress timestamp FIFOs are serialized one at a time and transmitted to the interface pins. The TS_FIFO_SI arbitrates in a round-robin fashion between the ports that have non-empty timestamp FIFOs. The port associated with each transmitted timestamp/frame signature pair is indicated in a serial address that precedes the data phase of the serial transmission.

Because the timestamp FIFOs are instantiated in the per port clock domains, a small single entry asynchronous SI FIFO (per port) ensures that the timestamp/frame signature pairs are synchronized, staged, and ready for serial transmission. When an SI FIFO is empty, the SI FIFO control fetches and/or unpacks a single timestamp/frame signature performing any timestamp FIFO dequeues necessary. The SI FIFO goes empty following the completion of the last data bit of the serial transmission. Enabled ports (TS_FIFO_SI_CFG.TS_FIFO_SI_ENA) participate in the round-robin selection.

Register TS_FIFO_SI_TX_CNT accumulates the number of timestamp/frame signature pairs transmitted from the serial timestamp interface for each channel. Register EGR_TS_FIFO_DROP_CNT accumulates the number of timestamp/frame signature pairs that have been dropped per channel due to a timestamp FIFO overflow.

The SPI compatible interface asserts a chip select (SPI_CS) for each write followed by a write command data bit equal to 1, followed by a “don't care” bit (0), followed by an address phase, followed by a data phase, followed by a deselect where SPI_CS is negated. Each write command corresponds to a single timestamp/frame signature pair. The length of the data phase depends upon the sum of the configured lengths of the timestamp and signature, respectively. The address phase is fixed at five bits. The SPI_CLK is toggled to transfer each SPI_DO bit (as well as the command and address bits). The “Timestamp” and “Frame Identifier Data” from the following illustration are sent MSB first down to LSB (bit 0) in the same format as stored in the seven registers of TS FIFO CSRs. For more information, see Timestamp FIFO, page 65 and Figure 63, page 67.

The frequency of the generated output 1588_SPI_CLK can be flexibly programmed from 10 MHz up to 62.5 MHz using TS_FIFO_SI_CFG to set the number of CSR clocks that the 1588_SPI_CLK is both high and low. For example, to generate a 1588_SPI_CLK that is a divide-by-6 of the CSR clock, the CSR register would be set such that both SI_CLK_LO_CYCS and SI_CLK_HI_CYCS equal 3. Also, the number of CSR clocks after SPI_CS asserts before the first 1588_SPI_CLK is programmable (SI_EN_ON_CYCS), as is the number of clocks before SI_EN negates after the last 1588_SPI_CLK (SI_EN_OFF_CYCS). The number of clocks during which SI_EN is negated between writes is also programmable (SI_EN_DES_CYCS). The 1588_SPI_CLK may also be configured to be inverted (SI_CLK_POL).

Without considering de-selection between writes, if the PTP 16-byte SequenceID (frame signature) is used as frame identifier each 10 byte time stamp write take 2 + 55 + 10 × 8 + 16 × 8 = 265 clocks (at 40 MHz) ~6625 ns. This corresponds to a time stamp bandwidth of > 0.15 M time stamp/second/port. The following illustration shows the serial time stamp/frame signature output.

Figure 63 • **Serial Time Stamp/Frame Signature Output**

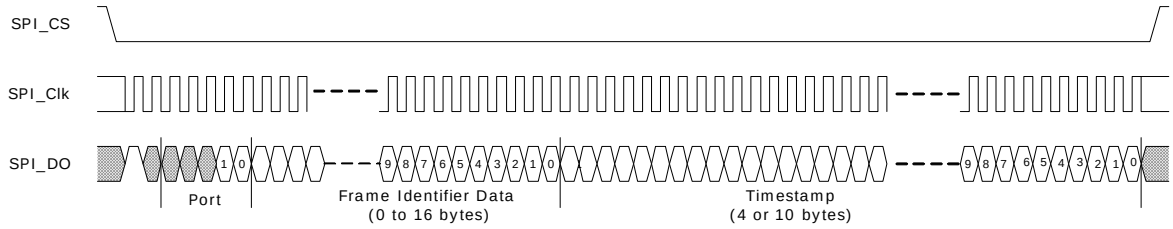

3.12.19 Rewriter

When the rewriter block gets a valid indication it overwrites the input data starting at the offset specified in Rewrite_offset and replaces N bytes of the input data with updated N bytes. Frames are modified by the rewriter as indicated by the analyzer-only PTP/OAM frames are modified by the rewriter.

The output of the rewriter block is the frame data stream that includes both unmodified frames and modified PTP frames. The block also outputs a count of the number of modified PTP frames in INGR_RW_MODFRM_CNT/EGR_RW_MODFRM_CNT, depending upon the direction. This counter accumulates the number of PTP frames to which a write was performed and includes errored frames.

3.12.19.1 Rewriter Ethernet FCS Calculation

The rewriter block has to recalculate the Ethernet CRC for the PTP message to modify the contents by writing a new timestamp or clear bytes. Two versions of the Ethernet CRC are calculated in accordance

with IEEE 802.3 Clause 3.2.9: one on the unmodified input data stream and one on the modified output data stream. The input frame FCS is checked against the input calculated FCS and if the values match, the frame is good. If they do not, then the frame is considered a bad or errored frame. The new calculated output FCS is used to update the FCS value in the output data frame. If the frame was good, then the FCS is used directly. If the frame was bad, the calculated output FCS is inverted before writing to the frame. Each version of the FCS is calculated in parallel by a separate FCS engine.

A count of the number of PTP/OAM frames that are in error is kept in the INGR_RW_FCS_ERR_CNT or EGR_RW_FCS_ERR_CNT register, depending upon the direction.

3.12.19.2 Rewriter UDP Checksum Calculation

For IPv6/UDP, the rewriter also calculates the value to write into the dummy blocks to correct the UDP checksum. The checksum correction is calculated by taking the original frame's checksum, the value in the dummy bytes, and the new data to be written; and using them to modify the existing value in the dummy byte location. The new dummy byte value is then written to the frame to ensure a valid checksum. The location of the dummy bytes is given by the analyzer. The UDP checksum correction is only performed when enabled using the following register bits:

- INGR_IP1_UDP_CHKSUM_UPDATE_ENABLE
- INGR_IP2_UDP_CHKSUM_UPDATE_ENABLE
- EGR_IP1_UDP_CHKSUM_UPDATE_ENABLE
- EGR_IP2_UDP_CHKSUM_UPDATE_ENABLE

Based upon the analyzer command and the rewriter configuration, the rewriter writes the timestamp in one of the following ways:

- Using PTP_REWRITE_BYTES to choose four bytes write to PTP_REWRITE_OFFSET. This method is similar to other PTP frame modifications and the timestamp is typically written to the reserved field in the PTP header.
- Using PTP_REWRITE_BYTES and RW_REDUCE_PREAMBLE to select the mode of operation when writing Rx timestamps into the frame.
  In these modes, it cannot do both a time stamp write/append and a PTP operation in the same frame. If PTP_REWRITE_BYTES = 0xE and RW_REDUCE_PREAMBLE = 1, it does it by overwriting the existing FCS with the timestamp in the lowest four bytes of the calculated timestamp and generating a new FCS and appending it.

Because the rewriter cannot modify the IFG or change the size of the frame, if the original FCS is overwritten with timestamp data a new FCS needs to be appended and the frame shortened by reducing the preamble. The preamble length includes the
/S/ character and all preamble characters up to but not including the SFD. In this mode, it is assumed that all incoming preambles are of sufficient (5 to 7-byte) length to delete four bytes and the preamble of every frame (not only PTP frames) will be reduced by four bytes by deleting four bytes of the preamble. Then, the new FCS is written at the end of the matched frame. For unmatched frames, or if the PTP_REWRITE_BYTES is anything but 0xE, the IFG is increased by adding four IDLE (/I/) characters after the /T/ which ends the packet.

To timestamp a frame in one of the modes, the actual length of the preamble is then checked and if the preamble is too short to allow a deletion of four bytes (if the preamble is not five bytes or more) then no operations are performed on the preamble, the FCS is not overwritten, and no timestamp is appended. For all such frames, a counter is maintained and every time an unsuccessful operation is encountered, the counter is incremented. This counter is read through register:
INGR_RW_PREAMBLE_ERR_CNT/EGR_RW_PREAMBLE_ERR_CNT. The following illustration shows the deleted preamble bytes.

Figure 64 • **Preamble Reduction in Rewriter**

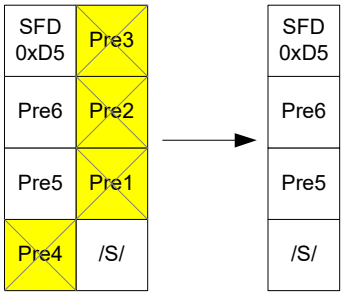

If PTP_REWRITE_BYTES = 0xF and RW_REDUCE_PREAMBLE = 0, the rewriter replaces the FCS of the frame with the four lowest bytes of the calculated time stamp and does not write the FCS to the frame. In this mode, all the frames have corrupted FCSs and the MAC needs to be configured to handle this case. In the case of a CRC error in the original frame, the rewriter writes all ones (0xFFFFFFFF) to the FCS instead of the timestamp. This indicates an invalid CRC to the MAC because this is reserved to indicate an invalid timestamp. In the rare case that the actual timestamp has the value 0xFFFFFFFF and the CRC is valid, the rewriter increments the timestamp to 0x0 and writes that value instead. This causes an error of 1 ns but is required to reserve the timestamp value of 0xFFFFFFFF for frames with an invalid CRC.

A flag bit may also be set in the PTP message header to indicate that the TSU has modified the frame (when set) or to clear the bit (on egress). The analyzer sends the byte offset of the flag byte to the rewriter in PTP_MOD_FRAME_BYTE_OFFSET and indicates whether the bit should be modified or not using PTP_MOD_FRAME_STATUS_UPDATE. The bit offset within the byte is programmed in the configuration register RW_FLAG_BIT. When the PTP frame is being modified, the selected bit is set to the value in the RW_FLAG_VAL. This only occurs when the frame is being modified by the rewriter; when the PTP frame matches and the command is not NOP.

3.12.20 Local Time Counter

The local time counter keeps the local time for the device and the time is monitored and synchronized to an external reference by the CPU. The source clock for the counter is selected externally to be a 250 MHz, 200 MHz, 125 MHz, or some other frequency. The clock may be a line clock or the dedicated 1588_DIFF_INPUT_CLK_P/N pins. The clock source is selected in register LTC_CTRL.LTC_CLK_SEL.

To support other frequencies, a flexible counter system is used that can convert almost any frequency in the 125–250 MHz range into a usable source clock. The frequency is programmed in terms of the clock period. Set the LTC_SEQUENCE.LTC_SEQUENCE_A register to the clock period to the nearest whole number of nanoseconds to be added to the local time counter on each clock cycle. Set LTC_SEQ.LTC_SEQ_E to the amount of error between the actual clock period and the LTC_SEQUENCE.LTC_SEQUENCE_A setting in femtoseconds. Register LTC_SEQ.LTC_SEQ_ADD_SUB indicates the direction of the error. An internal counter keeps track of the accumulated error. When the accumulated error exceeds 1 nanosecond, an extra nanosecond is either added or subtracted from the local time counter. Use the following as an example to program a 5.9 ns period:

```
LTC_SEQUENCE.LTC_SEQUENCE_A = 6 (6 ns)
LTC_SEQ.LTC_SEQ_E = 100000 (0.1 ns)
LTC_SEQ.LTC_SEQ_ADD_SUB = 0 (subtract an extra nanosecond, i.e add 5 ns)
```

To support automatic PPM adjustments, an internal counter runs on the same clock as the local time counter, and increments using the same sequence to count nanoseconds. The maximum (rollover) value of the internal counter in nanoseconds is given in register LTC_AUTO_ADJUST.LTC_AUTO_ADJUST_NS. At rollover, the next increment of the local time counter is increased by one additional or one less nanosecond as determined by the LTC_AUTO_ADJUST.LTC_AUTO_ADD_SUB_1NS register. When LTC_AUTO_ADJUST.LTC_AUTO_ADD_SUB_1NS is set to 0x1, an additional nanosecond is added to the local time counter. When it is set to 0x2, one less nanosecond is added to the local timer counter. No PPM adjustments are made when the register is set to 0x0 or 0x3.

PPM adjustments to the local time counter can be made on an as-needed basis by writing to the one-shot LTC_CTRL.LTC_ADD_SUB_1NS_REQ register. One nanosecond is added or subtracted from the local time counter each time LTC_CTRL.LTC_ADD_SUB_1NS_REQ is asserted. The LTC_CTRL.LTC_ADD_SUB_1NS register setting controls whether the local time counter adjustment is an addition or a subtraction.

The current time is loaded into the local time counter with the following procedure.

1. Configure the 1588_LOAD_SAVE pin.
2. Write the time to be loaded into the local time counter in registers LTC_LOAD_SEC_H, LTC_LOAD_SEC_L and LTC_LOAD_NS.
3. Program LTC_CTRL.LTC_LOAD_ENA to a 1.
4. Drive the 1588_LOAD_SAVE pin from low to high.

The time in registers LTC_LOAD_SEC_H, LTC_LOAD_SEC_L and LTC_LOAD_NS is loaded into the local time counter when the rising edge of the 1588 LOAD_SAVE strobe is detected. The LOAD_SAVE strobe is synchronized to the local time counter clock domain.

When the 1588_DIFF_INPUT_CLK_P/N pins are the clock source for the local time counter, and the LOAD_SAVE strobe is synchronous to 1588_DIFF_INPUT_CLK_P/N, the LTC_LOAD* registers are loaded into the local time counter, as shown in the following illustration.

Figure 65 • **Local Time Counter Load/Save Timing**

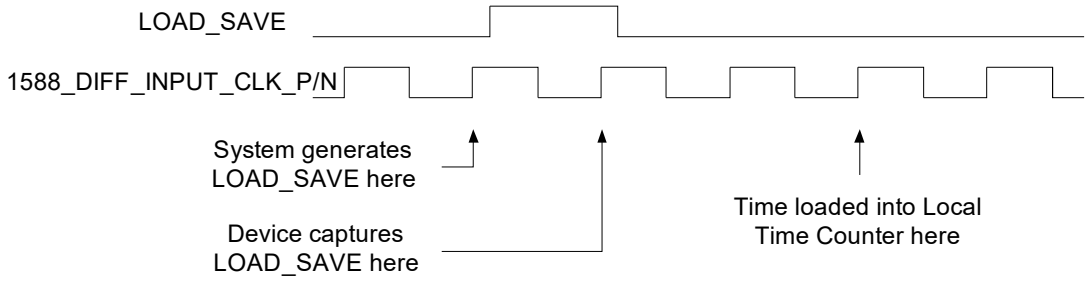

When the LOAD_SAVE strobe is not synchronous to the 1588_DIFF_INPUT_CLK_P/N pins or an internal clock drives the local time counter, there is some uncertainty as to when the local time counter is loaded. This reduces the accuracy of the time stamping function by the period of the local time counter clock.

Note: There is a local time counter in each channel. The counter is initialized in both channels if the LTC_CTRL.LTC_LOAD_ENA register in each channel is asserted when the LOAD_SAVE strobe occurs.

If the LTC_CTRL.LTC_SAVE_ENA register is asserted when the 1588 LOAD_SAVE input transitions from low to high, the state of the local time counter is stored in the LTC_SAVED_SEC_H, LTC_SAVED_SEC_L, and LTC_SAVED_NS registers. As with loading the local time counter, there is one clock cycle of uncertainty as to when the time is saved if the LOAD_SAVE strobe is not synchronous to the clock driving the counter.

The local time counter also generates a one pulse-per-second (1PPS) output signal with a programmable pulse width routed to GPIO pins. The pulse width of the 1PPS signal is determined by the LTC_1PPS_WIDTH_ADJ register.

The 1PPS output has an alternate mode of operation that increases the frequency of the pulses. This mode may be used for applications such as locking an external DPLL to the IEEE1588 frequency. In the alternate mode the 1PPS signal is driven directly from a single bit of the nanosecond field counter of the local time counter. The pulse width can not be controlled in this alternate operation mode. The alternate mode is enabled with register LTC_CTRL.LTC_ALT_MODE_PPS_BIT.

The output frequencies that result are 1 divided by powers of 2 nanoseconds (i.e. bit 4 = 1/32 ns, bit 5 = 1/64 ns, bit 6 = 1/128 ns, …). The output pulses may jitter by the amount of the programmed nanoseconds of the adder to the local nanoseconds counter, and any automatic or one-shot adjustments.

The following table shows the possible output pulse frequencies (including the range of 4 kHz to 10 MHz) usable for external applications.

Table 24 • **Output Pulse Frequencies**

Nanosecond Counter Bit	Output Pulse Frequency
4	31.25 MHz
5	15.625 MHz
6	7.8125 MHz
7	3.90625 MHz
8	1.953125 MHz

The following is an example of an automatic adjustment calculation:

If a 250 MHz local time counter clock is off by 100 PPM (0.01%), then the 4 ns period is off by 0.0004 ns every clock cycle. A 1 ns adjustment would need to be made to the local time counter every 1 ns/(0.0004 ns) cycles, or every 2500 cycles. Because the clock period is 4 ns, the LTC_AUTO_ADJUST.LTC_AUTO_ADJUST_NS register would be set to 2500 x 4 which is 10,000 ns.

3.12.21 Accuracy and Resolution

Contact Microsemi with any questions regarding PTP accuracy calculations. The timestamp accuracy is a system-level property and may depend upon oscillator selection, port type and speed, system configuration, and calibration decisions.

Supported frequencies of the local time counter are 125 MHz, 156.25 MHz, 200 MHz, and 250 MHz. The time stamp resolution is equal to the local time counter clock period. For example, a 250 MHz local time counter clock will provide a 4 ns time stamp resolution.

3.12.22 Accessing 1588 IP Registers

The following sections describe how the 1588 IP registers are accessed in the VSC8574-01 device.

Note: Contact Microsemi for an initialization script that supports the quick initialization of 1588 registers.

3.12.22.1 1588 Register Access Using SMI (MDC/MDIO) Mechanism

The SMI mechanism is an IEEE defined register access mechanism (refer to Clause 22 of IEEE 802.3). The registers are arranged as 16 bits per register address with a 5 bit address field as defined by IEEE. However Microsemi has extended this register address space by creating a register page key in register 31. When writing a particular key to register 31, a different set of 5 bit address space register bank can be accessed through the SMI mechanism. (extended page, GPIO page, etc).

The 1588 registers are organized on page 0x1588. Setting Register 31 to 0x1588 provides a window to CSR registers through registers 16,17, and 18.

The 1588 IP registers are arranged as 32 bits of data. The access method through SMI is done by breaking up the 32 bits of each 1588 register into the high 16 bits into register 18 and lower 16 bits into register 17. Then register 16 is used as a command register. Phy0 and Phy2 automatically read/write to engine A. Phy1 and Phy3 automatically read/write to engine B. For more information, see Figure 26, page 25. The following tables show the bit descriptions for register 16, 17, and 18.

Table 25 • **Register 16**

Bit	Access	Description
15	RWSC	Command bit. 1: Must be set to execute the command. It is set back to 1 when done. 0: Command busy, do not do any write to register 16. Register 17 and 18 maintain previous write values.

Table 25 • **Register 16 *(continued)***

Bit	Access	Description
14	RW	1: Execute a read on the CSR registers 0: Execute a write on the CSR registers
13:11	RW	Target block code 000: Analyzer 0 Ingress 001: Analyzer 0 Egress 010: Analyzer 1 Ingress 011: Analyzer 1 Egress 100: Analyzer 2 Ingress 101: Analyzer 2 Egress 110: Processor 0 111: Processor 1
10:0	RW	CRS register address[10:0](1)

1. For more information about valid 1588 registers for this field, see 1588 IP Registers, page 140.

Table 26 • **Register 17**

Bit	Access	Description
15:0	RWSC	CSR Data_LSB[15:0]

Table 27 • **Register 18**

Bit	Access	Description
15:0	RWSC	CSR Data_MSB[31:16]

3.12.23 1588_PPS_0/1 Mux Control

The 1588 PPS_0 mux control register controls the Phy used to access 1588_PPS_0. The following table shows the settings available. For more information, see Figure 26, page 25.

Table 28 • **1588_PPS_0 Mux Control, Address 21E1588**

Bit	Name	Access	Description	Default
15:2	Reserved	RO	Reserved	
1:0	1588_PPS_0 control	R/W	00: PPS_0 from Phy0 01: PPS_0 from Phy1 10: PPS_0 from Phy2 11: PPS_0 from Phy3	00

3.12.24 1588_DIFF_INPUT_CLK Configuration

The default configuration of the 1588_DIFF_INPUT_CLK_P/N pins sets the device to use an internal clock for the LTC. To configure these pins correctly to use an external clock for LTC, write 0xb71c to register 30E1588 and 0x7ae0 to register 29E1588. Set these two registers to 0x0 when an internal clock is used for LTC.

3.13 Media Recovered Clock Outputs

For Synchronous Ethernet applications, the VSC8574-01 includes two recovered clock output pins, RCVRDCLK1 and RCVRDCLK2, controlled by registers 23G and 24G, respectively. The recovered clock pins are synchronized to the clock of the active media link.

To enable recovered clock output, set register 23G or 24G, bit 15, to 1. By default, the recovered clock output pins are disabled and held low, including when NRESET is asserted. Registers 23G and 24G also control the PHY port for clock output, the clock source, the clock frequency (either 25 MHz, 31.25 MHz, or 125 MHz), and squelch conditions.

Note: When EEE is enabled on a link, the use of the recovered clock output is not recommended due to long holdovers occurring during EEE Quiet/Refresh cycles.

3.13.1 Clock Selection Settings

On each pin, the recovered clock supports the following sources, as set by registers 23G or 24G, bits 2:0:

- Fiber SerDes media recovered clock
- Copper PHY recovered clock
- Copper PHY media transmitter TCLK output (RCVRDCLK1 only.) For more information, see Table 87, page 122 and Table 88, page 123.

Note: When using the automatic media sense feature, the recovered clock output cannot automatically change between each active media. Changing the media source must be managed through the recovered clock register settings.

Adjust the squelch level to enable 1000BASE-T master mode recovered clock for SyncE operation. This is accomplished by changing the 23G and 24G register bits 5:4 to 01. This setting also provides clock out for 10BASE-T operation. For 1000BASE-T master mode, the clock is based on the VSC8574-01 REFCLK input, which is a local clock.

3.13.2 Clock Output Squelch

Under certain conditions, the PHY outputs a clock based on the REFCLK_P and REFCLK_N pins, such as when there is no link present or during autonegotiation. To prevent an undesirable clock from appearing on the recovered clock pins, the VSC8574-01 squelches, or inhibits, the clock output based on any of the following criteria:

- No link is detected (the link status register 1, bit 2 = 0). In fiber media modes, sync status is required to unsquelch the recovered clock output instead of link status.
- The link is found to be unstable using the fast link failure detection feature. The GPIO9/FASTLINK-FAIL pin is asserted high when enabled.
- The active link is in 10BASE-T or in 1000BASE-T master mode. These modes produce unreliable recovered clock sources.
- CLK_SQUELCH_IN is enabled to squelch the clock.

Use registers 23G or 24G, bits 5:4 to configure the clock squelch criteria. These registers can also disable the squelch feature. The CLK_SQUELCH_IN pin controls the squelching of the clock. Both RCVRDCLK1 and RCVRDCLK2 are squelched when the CLK_SQUELCH_IN pin is high.

3.14 Serial Management Interface

The VSC8574-01 device includes an IEEE 802.3-compliant serial management interface (SMI) that is affected by use of its MDC and MDIO pins. The SMI provides access to device control and status registers. The register set that controls the SMI consists of 32 16-bit registers, including all required IEEE-specified registers. Also, there are additional pages of registers accessible using device register 31.

Energy efficient Ethernet control registers are available through the SMI using Clause 45 registers and Clause 22 register access in registers 13 through 14. For more information, see Table 30, page 76 and Table 91, page 124.

The SMI is a synchronous serial interface with input data to the VSC8574-01 on the MDIO pin that is clocked on the rising edge of the MDC pin. The output data is sent on the MDIO pin on the rising edge of the MDC signal. The interface can be clocked at a rate from 0 MHz to 12.5 MHz, depending on the total load on MDIO. An external 2-kΩ pull-up resistor is required on the MDIO pin.

3.14.1 SMI Frames

Data is transferred over the SMI using 32-bit frames with an optional, arbitrary-length preamble. Before the first frame can be sent, at least two clock pulses on MDC must be provided with the MDIO signal at logic one to initialize the SMI state machine. The following illustrations show the SMI frame format for read and write operations.

Figure 66 • **SMI Read Frame**

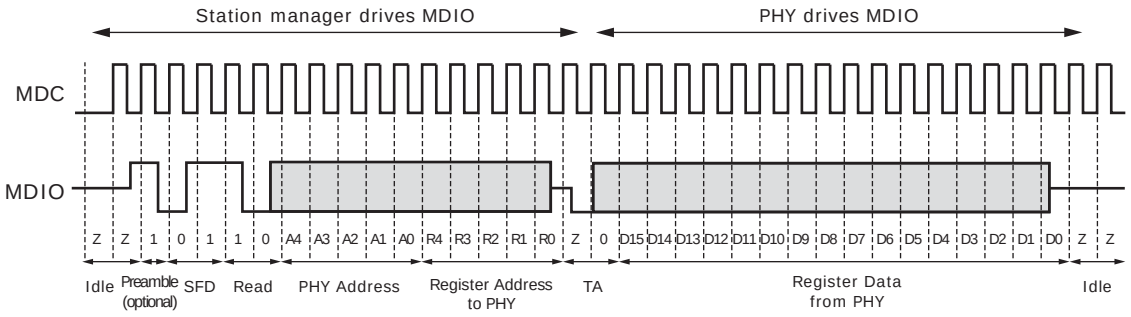

Figure 67 • **SMI Write Frame**

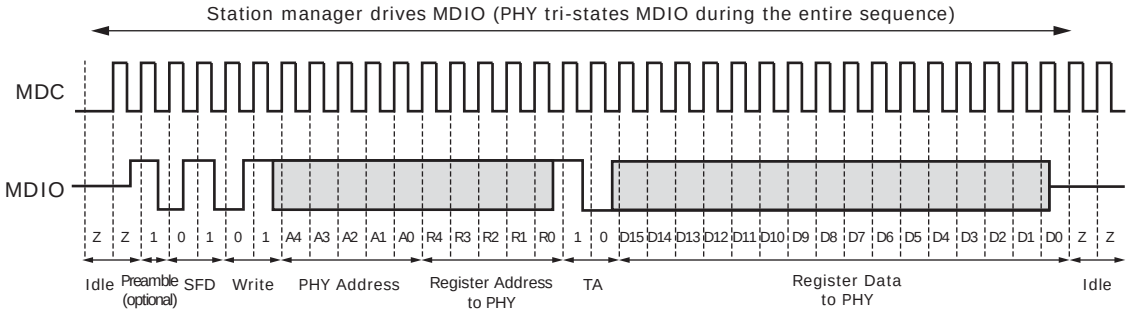

The following list provides additional information about the terms used in the SMI read and write timing diagrams.

- **Idle** During idle, the MDIO node goes to a high-impedance state. This allows an external pull-up resistor to pull the MDIO node up to a logical 1 state. Because the idle mode does not contain any transitions on MDIO, the number of bits is undefined during idle.
- **Preamble** By default, preambles are not expected or required. The preamble is a string of ones. If it exists, the preamble must be at least 1 bit; otherwise, it can be of an arbitrary length.
- **Start of Frame (SFD)** A pattern of 01 indicates the start of frame. If the pattern is not 01, all following bits are ignored until the next preamble pattern is detected.
- **Read or Write Opcode** A pattern of 10 indicates a read. A 01 pattern indicates a write. If the bits are not either 01 or 10, all following bits are ignored until the next preamble pattern is detected.
- **PHY Address** The particular VSC8574-01 responds to a message frame only when the received PHY address matches its physical address. The physical address is 5 bits long (4:0).
- **Register Address** The next five bits are the register address.
- **Turnaround** The two bits used to avoid signal contention when a read operation is performed on the MDIO are called the turnaround (TA) bits. During read operations, the VSC8574-01 drives the second TA bit, a logical 0.
- **Data** The 16-bits read from or written to the device are considered the data or data stream. When data is read from a PHY, it is valid at the output from one rising edge of MDC to the next rising edge of MDC. When data is written to the PHY, it must be valid around the rising edge of MDC.
- **Idle** The sequence is repeated.

3.14.2 SMI Interrupt

The SMI includes an output interrupt signal, MDINT, for signaling the station manager when certain events occur in the VSC8574-01.

The MDINT pin can be configured for open-drain (active-low) by tying the pin to a pull-up resistor and to VDDIO. The following illustration shows this configuration.

Figure 68 • **MDINT Configured as an Open-Drain (Active-Low) Pin**

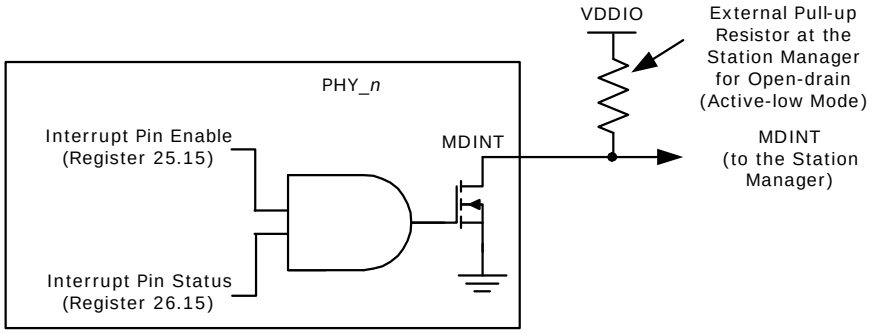

Alternatively, the MDINT pin can be configured for open-source (active-high) by tying the pin to a pull-down resistor and to VSS. The following illustration shows this configuration.

Figure 69 • **MDINT Configured as an Open-Source (Active-High) Pin**

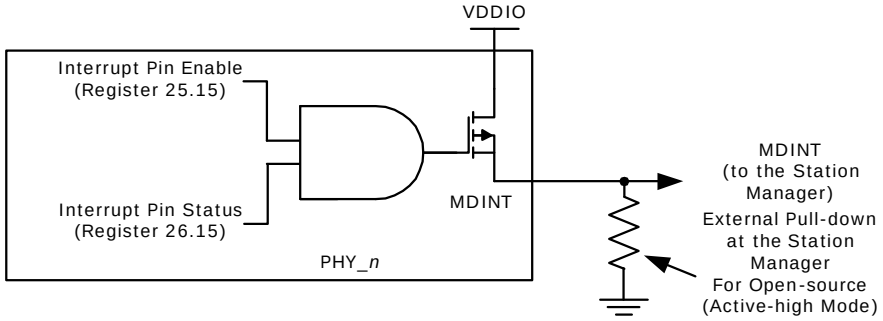

When a PHY generates an interrupt, the MDINT pin is asserted (driven high or low, depending on resistor connection) if the interrupt pin enable bit (MII register 25.15) is set.

3.15 LED Interface

The LED interface supports the following configurations: direct drive, basic serial LED mode, and enhanced serial LED mode. The polarity of the LED outputs is programmable and can be changed through register 17E2, bits 13:10. The default polarity is active low.

Direct drive mode provides four LED signals per port, LED0_[0:3] through LED3_[0:3]. The mode and function of each LED signal can be configured independently. When serial LED mode is enabled, the direct drive pins not used by the serial LED interface remain available.

In basic serial LED mode, all signals that can be displayed on LEDs are sent as LED_Data and LED_CLK for external processing. In enhanced serial LED mode, up to four LED signals per port can be sent as LED_Data, LED_CLK, LED_LD, and LED_Pulse. The following sections provide detailed information about the various LED modes.

Note: LED number is listed using the convention, LED<LED#>_<Port#>.

The following table shows the bit 9 settings for register 14G that are used to control the LED behavior for all the LEDs in VSC8574-01.

Table 29 • **LED Drive State**

Setting	Active	Not Active
14G.9 = 1 (default)	Ground	Tristate
14G.9 = 0 (alternate setting)	Ground	V_{DD}

3.15.1 LED Modes

Each LED pin can be configured to display different status information that can be selected by setting the LED mode in register 29. The modes listed in the following table are equivalent to the setting used in register 29 to configure each LED pin. The default LED state is active low and can be changed by modifying the value in register 17E2, bits 13:10. The blink/pulse-stretch is dependent on the LED behavior setting in register 30.

The following table provides a summary of the LED modes and functions.

Table 30 • **LED Mode and Function Summary**

Mode	Function Name	LED State and Description
0	Link/Activity	1: No link in any speed on any media interface. 0: Valid link at any speed on any media interface. Blink or pulse-stretch = Valid link at any speed on any media interface with activity present.
1	Link1000/Activity	1: No link in 1000BASE-T or 1000BASE-X. 0: Valid 1000BASE-T or 1000BASE-X. Blink or pulse-stretch = Valid 1000BASE-T or 1000BASE-X link with activity present.
2	Link100/Activity	1: No link in 100BASE-TX or 100BASE-FX. 0: Valid 100BASE-TX or 100BASE-FX. Blink or pulse-stretch = Valid 100BASE-TX or 100BASE-FX link with activity present.
3	Link10/Activity	1: No link in 10BASE-T. 0: Valid 10BASE-T link. Blink or pulse-stretch = Valid 10BASE-T link with activity present.
4	Link100/1000/Activity	1: No link in 100BASE-TX, 100BASE-FX, 1000BASE-X, or 1000BASE-T. 0: Valid 100BASE-TX, 100BASE-FX, 1000BASE-X, or 1000BASE-T link. Blink or pulse-stretch = Valid 100BASE-TX, 100BASE-FX, 1000BASE-X, or 1000BASE-T link with activity present.
5	Link10/1000/Activity	1: No link in 10BASE-T, 1000BASE-X, or 1000BASE-T. 0: Valid 10BASE-T, 1000BASE-X, or 1000BASE-T link. Blink or pulse-stretch = Valid 10BASE-T, 1000BASE-X, or 1000BASE-T link with activity present.
6	Link10/100/Activity	1: No link in 10BASE-T, 100BASE-FX, or 100BASE-TX. 0: Valid 10BASE-T, 100BASE-FX, or 100BASE-TX link. Blink or pulse-stretch = Valid 10BASE-T, 100BASE-FX, or 100BASE-TX link with activity present.
7	Link100BASE-FX/1000BASE-X/Activity	1: No link in 100BASE-FX or 1000BASE-X. 0: Valid 100BASE-FX or 1000BASE-X link. Blink or pulse-stretch = Valid 100BASE-FX or 1000BASE-X link with activity present.
8	Duplex/Collision	1: Link established in half-duplex mode, or no link established. 0: Link established in full-duplex mode. Blink or pulse-stretch = Link established in half-duplex mode but collisions are present.
9	Collision	1: No collision detected. Blink or pulse-stretch = Collision detected.

Table 30 • **LED Mode and Function Summary *(continued)***

Mode	Function Name	LED State and Description
10	Activity	1: No activity present. Blink or pulse-stretch = Activity present (becomes TX activity present when register bit 30.14 is set to 1).
11	100BASE-FX/1000BASE-X Fiber Activity	1: No 100BASE-FX or 1000BASE-X activity present. Blink or pulse-stretch = 100BASE-FX or 1000BASE-X activity present (becomes RX activity present when register bit 30.14 is set to 1).
12	Autonegotiation Fault	1: No autonegotiation fault present. 0: Autonegotiation fault occurred.
13	Serial Mode	Serial stream. See Basic Serial LED Mode, page 78. Only relevant on PHY port 0 and reserved in others.
14	Force LED Off	1: De-asserts the LED(1).
15	Force LED On	0: Asserts the LED(1).

1. Setting this mode suppresses LED blinking after reset.

3.15.2 Extended LED Modes

In addition to the LED modes in register 29, there are also additional LED modes that are enabled on the LED0_[3:0] pins whenever the corresponding register 19E1, bits 15 to 12 are set to 1. Each of these bits enables extended modes on a specific LED pin and these extended modes are shown in the following table. For example, LED0 = mode 17 means that register 19E1 bit 12 = 1 and register 29 bits 3 to 0 = 0001.

The following table provides a summary of the extended LED modes and functions.

Table 31 • **Extended LED Mode and Function Summary**

Mode	Function Name	LED State and Description
16	Link1000BASE-X Activity	1: No link in 1000BASE-X. 0: Valid 1000BASE-X link.
17	Link100BASE-FX Activity	1: No link in 100BASE-FX. 0: Valid 100BASE-FX link.
18	1000BASE-X Activity	1: No 1000BASE-X activity present. Blink or pulse-stretch = 1000BASE-X activity present.
19	100BASE-FX Activity	1: No 100BASE-FX activity present. Blink or pulse-stretch = 100BASE-FX activity present.
20	Force LED Off	1: De-asserts the LED.
21	Force LED On	0: Asserts the LED. LED pulsing is disabled in this mode.
22	Fast Link Fail	1: Enable fast link fail on the LED pin 0: Disable

3.15.3 LED Behavior

Several LED behaviors can be programmed into the VSC8574-01. Use the settings in register 30 and 19E1 to program LED behavior, which includes the following.

LED Combine Enables an LED to display the status for a combination of primary and secondary modes. This can be enabled or disabled for each LED pin. For example, a copper link running in 1000BASE-T mode and activity present can be displayed with one LED by configuring an LED pin to Link1000/Activity mode. The LED asserts when linked to a 1000BASE-T partner and also blinks or

performs pulse-stretch when activity is either transmitted by the PHY or received by the Link Partner. When disabled, the combine feature only provides status of the selected primary function. In this example, only Link1000 asserts the LED, and the secondary mode, activity, does not display when the combine feature is disabled.

LED Blink or Pulse-Stretch This behavior is used for activity and collision indication. This can be uniquely configured for each LED pin. Activity and collision events can occur randomly and intermittently throughout the link-up period. Blink is a 50% duty cycle oscillation of asserting and de-asserting an LED pin. Pulse-stretch guarantees that an LED is asserted and de-asserted for a specific period of time when activity is either present or not present. These rates can also be configured using a register setting.

Rate of LED Blink or Pulse-Stretch This behavior controls the LED blink rate or pulse-stretch length when blink/pulse-stretch is enabled on an LED pin. The blink rate, which alternates between a high and low voltage level at a 50% duty cycle, can be set to 2.5 Hz, 5 Hz, 10 Hz, or 20 Hz. For pulse-stretch, the rate can be set to 50 ms, 100 ms, 200 ms, or 400 ms. The blink rate selection for PHY0 globally sets the rate used for all LED pins on all PHY ports.

LED Pulsing Enable To provide additional power savings, the LEDs (when asserted) can be pulsed at 5 kHz, 20% duty cycle.

LED Blink After Reset The LEDs will blink for one second after power-up and after any time all resets have been de-asserted. This can be disabled through register 19E1, bit 11 = 0.

Fiber LED Disable This bit controls whether the LEDs indicate the fiber and copper status (default) or the copper status only.

Pulse Programmable Control These bits add the ability to width and frequency of LED pulses. This feature facilitates power reduction options.

Fast Link Failure For more information about this feature, see Fast Link Failure Indication, page 79.

3.15.4 Basic Serial LED Mode

Optionally, the VSC8574-01 can be configured so that access to all its LED signals is available through two pins. This option is enabled by setting LED0 on PHY0 to serial LED mode in register 29, bits 3:0 to 0xD. When serial LED mode is enabled, the LED0_0 pin becomes the serial data pin, and the LED1_0 pin becomes the serial clock pin. All other LED pins can still be configured normally. The serial LED mode clocks the 48 LED status bits on the rising edge of the serial clock.

The LED behavior settings can also be used in serial LED mode. The controls are used on a per-PHY basis, where the LED combine and LED blink or pulse-stretch setting of LED0_n for each PHY is used to control the behavior of each bit of the serial LED stream for each corresponding PHY. To configure LED behavior, set device register 30.

The following table shows the 48-bit serial output bitstream of each LED signal. The individual signals can be clocked in the following order.

Table 32 • **LED Serial Bitstream Order**

Output	PHY0	PHY1	PHY2	PHY3
Link/activity	1	13	25	37
Link1000/activity	2	14	26	38
Link100/activity	3	15	27	39
Link10/activity	4	16	28	40
Fiber link/activity	5	17	29	41
Duplex/collision	6	18	30	42
Collision	7	19	31	43
Activity	8	20	32	44
Fiber activity	9	21	33	45

Table 32 • **LED Serial Bitstream Order *(continued)***

Output	PHY0	PHY1	PHY2	PHY3
Tx activity	10	22	34	46
Rx activity	11	23	35	47
Autonegotiation fault	12	24	36	48

3.15.5 Enhanced Serial LED Mode

VSC8574-01 can be configured to output up to four LED signals per port on a serial stream that can be de-serialized externally to drive LEDs on the system board. In enhanced serial LED mode, the port 0 and port 1 LED output pins serve the following functions:

- LED0_0/LED0_1: LED_DATA
- LED1_0/LED1_1: LED_CLK
- LED2_0/LED2_1: LED_LD
- LED3_0/LED3_1: LED_PULSE

The serial LED_DATA is shifted out on the falling edge of LED_CLK and is latched in the external serial-to-parallel converter on the rising edge of LED_CLK. The falling edge of LED_LD signal can be used to shift the data from the shift register in the converter to the parallel output drive register. When a separate parallel output drive register is not used in the external serial-to-parallel converter, the LEDs will blink at a high frequency as the data bits are being shifted through, which may be undesirable. LED pin functionality is controlled by setting register 25G, bits 7:1.

The LED_PULSE signal provides a 5 kHz pulse stream whose duty cycle can be modulated to turn on/off LEDs at a high rate. This signal can be tied to the output enable signal of the serial-to-parallel converter to provide the LED dimming functionality to save energy. The LED_PULSE duty cycle is controlled by setting register 25G, bits 15:8.

3.15.6 LED Port Swapping

For additional hardware configurations, the VSC8574-01 can have its LED port order swapped. This is a useful feature to help simplify PCB layout design. Register 25G bit 0 controls the LED port swapping mode.

Note: LED port swapping only applies to the parallel LED outputs and does not affect the serial LED outputs.

3.16 Fast Link Failure Indication

To aid Synchronous Ethernet applications, the VSC8574-01 can indicate the onset of a link failure in less than 1 ms (worst-case <3 ms). By comparison, the IEEE 802.3 standard establishes a delay of up to 750 ms before indicating that a 1000BASE-T link is no longer present. A fast link failure indication is critical to support ports used in a synchronization timing link application. The fast link failure indication works for all copper media speeds, but not for fiber media. Fast link failure is supported for each PHY port through the GPIO9/FASTLINK-FAIL pin.

Note: For all links except 1000BASE-T, the fast link failure indication matches the link status register (address 1, bit 2). For 1000BASE-T links, the link failure is based on a circuit that analyzes the integrity of the link, and at the indication of failure, will assert.

Note: The Fast Link Failure Indication should not be used when EEE is enabled on a link.

3.17 Integrated Two-Wire Serial Multiplexer

The VSC8574-01 includes an integrated quad two-wire serial multiplexer (MUX), eliminating the need for an external two-wire serial device for the control and status of SFP or PoE modules. There are five two-wire serial controller pins: four clocks and one shared data pin. Each SFP or PoE connects to the multipurpose GPIO[7:4]_I2C_SCL_[3:0] and GPIO8/I2C_SDA device pins, which must be configured to the corresponding two-wire serial function. For more information about configuring the pins, see Two-Wire Serial MUX Control 1, page 131. For SFP modules, VSC8574-01 can also provide control for the MODULE_DETECT and TX_DIS module pins using the multipurpose LED and GPIO pins.

Figure 70 • **Two-Wire Serial MUX with SFP Control and Status**

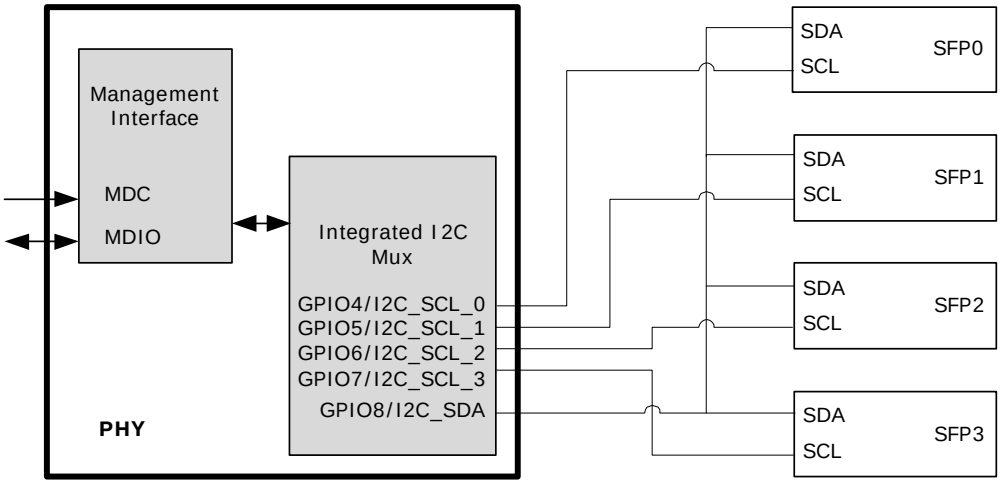

3.17.1 Read/Write Access Using the Two-Wire Serial MUX

Using the integrated two-wire serial MUX, the VSC8574-01 device can read and write to an SFP or PoE module through the SCL and SDA pins. If the ability is required to write to the slave two-wire serial device, refer to the device's specific datasheet for more information.

Note: The VSC8574-01 device does not automatically increment the two-wire serial address. Each desired address must be intentionally set.

Main control of the integrated two-wire serial MUX is available through register 20G. The two-wire serial MUX pins are enabled or disabled using register 20G bits 3:0. Register 20G bits 15:9 set the two-wire serial device address (the default is 0xA0). Using register 20G bits 5:4, the two-wire serial frequency can be changed from 100 kHz to other speeds, such as 50 kHz, 100 kHz (the default), 400 kHz, and 2 MHz. Registers 21G and 22G provide status and control of the read/write process. The following illustration shows the read and write register flow.

Figure 71 • **Two-Wire Serial MUX Read and Write Register Flow**

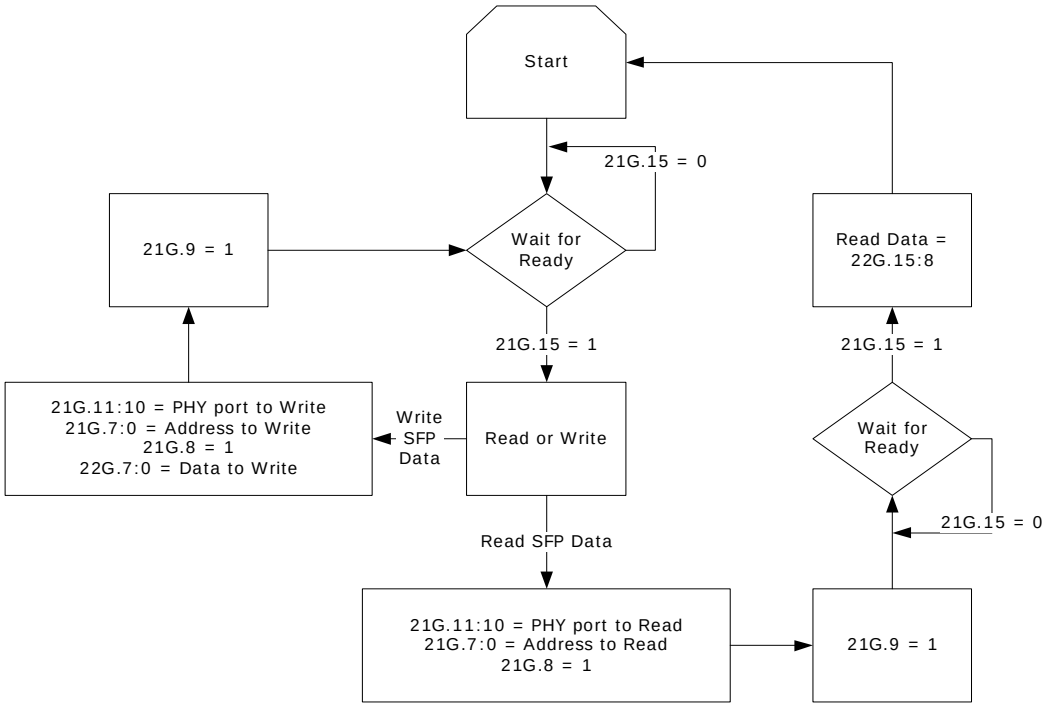

To read a value from a specific address of the two-wire serial slave device:

1. Read the VSC8574-01 device register 21G bit 15, and ensure that it is set.
2. Write the PHY port address to be read to register 21G bits 11:10.
3. Write the two-wire serial address to be read to register 21G bits 7:0.
4. Set both register 21G bits 8 and 9 to 1.
5. When register 21G bit 15 changes to 1, read the 8-bit data value found at register 22G bits 15:8. This is the contents of the address just read by the PHY.

To write a value to a specific address of the two-wire serial slave device:

1. Read the VSC8574-01 device register 21G bit 15 and ensure that it is set.
2. Write the PHY port address to be written to register 21G bits 11:10.
3. Write the address to be written to register 21G bits 7:0.
4. Set register 21 bit 8 to 0.
5. Set register 22G bits 7:0 with the 8-bit value to be written to the slave device.
6. Set register 21G bit 9 to 1.

To avoid collisions during read and write transactions on the two-wire serial bus, always wait until register 21G bit 15 changes to 1 before performing another two-wire serial read or write operation.

3.18 GPIO Pins

The VSC8574-01 provides 14 multiplexed general purpose input/output (GPIO) pins. All device GPIO pins and their behavior are controlled using registers. The following table shows an overview of the register controls for GPIO pins. For more information, see General Purpose Registers, page 125.

Table 33 • **Register Bits for GPIO Control and Status**

GPIO Pin	GPIO_ctrl	GPIO Input	GPIO Output	GPIO Output Enable
GPIO0/SIGDET0	13G.1:0	15G.0	16G.0	17G.0
GPIO1/SIGDET1	13G.3:2	15G.1	16G.1	17G.1
GPIO2/SIGDET2	13G.5:4	15G.2	16G.2	17G.2
GPIO3/SIGDET3	13G.7:6	15G.3	16G.3	17G.3
GPIO4/I2C_SCL_0	13G.9:8.	15G.4	16G.4	17G.4
GPIO5/I2C_SCL_1	13G.11:10	15G.5	16G.5	17G.5
GPIO6/I2C_SCL_2	13G.13:12	15G.6	16G.6	17G.6
GPIO7/I2C_SCL_3	13G.15:14	15G.7	16G.7	17G.7
GPIO8/I2C_SDA	14G.1:0	15G.8	16G.8	17G.8
GPIO9/FASTLINK_FAIL	14G.3:2	15G.9	16G.9	17G.9
GPIO10/1588_LOAD_SAVE	14G.5:4	15G.10	16G.10	17G.10
GPIO11/1588_PPS_0	14G.7:6	15G.11	16G.11	17G.11
GPIO12/1588_SPI_CS	14G.15:14	15G.12	16G.12	17G.12
GPIO13/1588_SPI_DO	14G.15:14	15G.13	16G.13	17G.13

3.19 Testing Features

The VSC8574-01 device includes several testing features designed to facilitate performing system-level debugging and in-system production testing. This section describes the available features.

3.19.1 Ethernet Packet Generator

The Ethernet packet generator (EPG) can be used at each of the 10/100/1000BASE-T speed settings for copper Cat5 media and fiber media to isolate problems between the MAC and the VSC8574-01, or between a locally connected PHY and its remote link partner. Enabling the EPG feature effectively

disables all MAC interface transmit pins and selects the EPG as the source for all data transmitted onto the twisted pair interface. This feature is not used when the SerDes media is set to pass-through mode.

Important The EPG is intended for use with laboratory or in-system testing equipment only. Do not use the EPG testing feature when the VSC8574-01 is connected to a live network.

To enable the VSC8574-01 EPG feature, set the device register bit 29E1.15 to 1.

When the EPG is enabled, packet loss occurs during transmission of packets from the MAC to the PHY. However, the PHY receive output pins to the MAC are still active when the EPG is enabled. When it is necessary to disable the MAC receive pins as well, set the register bit 0.10 to 1.

When the device register bit 29E1.14 is set to 1, the PHY begins transmitting Ethernet packets based on the settings in registers 29E1 and 30E1. These registers set:

- Source and destination addresses for each packet
- Packet size
- Interpacket gap
- FCS state
- Transmit duration
- Payload pattern

When register bit 29E1.13 is set to 0, register bit 29E1.14 is cleared automatically after 30,000,000 packets are transmitted.

3.19.2 CRC Counters

Two sets of cyclical redundancy check (CRC) counters are available in all PHYs in VSC8574-01. One set monitors traffic on the copper interface and the other set monitors traffic on the SerDes interface.

The device CRC counters operate in the 100BASE-FX/1000BASE-X over SerDes mode as well as in the 10/100/1000BASE-T mode as follows:

After receiving a packet on the media interface, register bit 15 in register 18E1 or register 28E3 is set and cleared after being read.

The packet then is counted by either the good CRC counter or the bad CRC counter.

Both CRC counters are also automatically cleared when read.

The good CRC counter's highest value is 9,999 packets. After this value is reached, the counter clears on the 10,000th packet and continues to count additional packets beyond that value. The bad CRC counter stops counting when it reaches its maximum counter limit of 255 packets.

3.19.2.1 Copper Interface CRC Counters

Two separate CRC counters are available and reside between the copper interface PCSs and SerDes MAC interface. There is a 14-bit good CRC counter available through register bits 18E1.13:0 and a separate 8-bit bad CRC counter available in register bits 23E1.7:0.

3.19.2.2 SerDes Interface CRC Counters

Two separate CRC counters are available and reside between the SerDes media interface PCSs and SerDes MAC interface. There is a 14-bit good CRC counter available through register bits 28E3.13:0 and a separate 8-bit bad CRC counter available in register bits 29E3.7:0.

3.19.2.3 SerDes Fiber Media Transmit Counters

Two fiber media transmit counters are available to verify packets being transmitted on the fiber media. Register bits 21E3.13:0 are the good CRC packet counters and register bits 22E3.7:0 are the CRC error counters.

3.19.3 Far-End Loopback

The far-end loopback testing feature is enabled by setting register bit 23.3 to 1. When enabled, it forces incoming data from a link partner on the current media interface, into the MAC interface of the PHY, to be retransmitted back to the link partner on the media interface as shown in the following illustration. In

addition, the incoming data also appears on the receive data pins of the MAC interface. Data present on the transmit data pins of the MAC interface is ignored when using this testing feature.

Figure 72 • **Far-End Loopback Diagram**

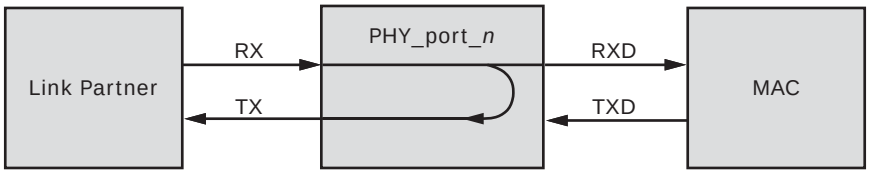

3.19.4 Near-End Loopback

When the near-end loopback testing feature is enabled, transmitted data (TXD) is looped back in the PCS block onto the receive data signals (RXD), as shown in the following illustration. When using this testing feature, no data is transmitted over the network. To enable near-end loopback, set the device register bit 0.14 to 1.

Figure 73 • **Near-End Loopback Diagram**

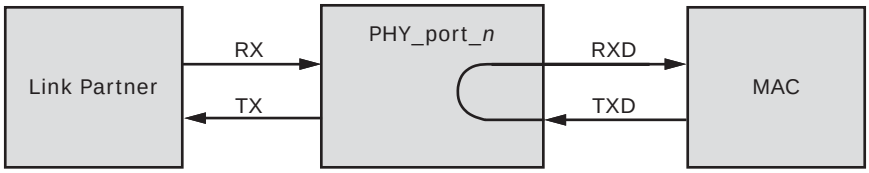

3.19.5 Connector Loopback

The connector loopback testing feature allows the twisted pair interface to be looped back externally. When using this feature, the PHY must be connected to a loopback connector or a loopback cable. Connect pair A to pair B, and pair C to pair D, as shown in the following illustration. The connector loopback feature functions at all available interface speeds.

Figure 74 • **Connector Loopback Diagram**

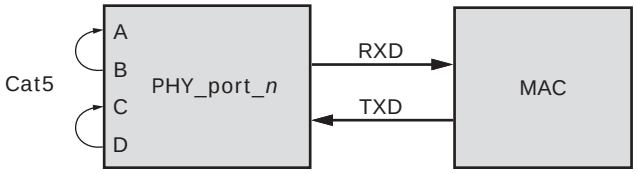

When using the connector loopback testing feature, the device autonegotiation, speed, and duplex configuration is set using device registers 0, 4, and 9. For 1000BASE-T connector loopback, the following additional writes are required. Execute the additional writes in the following order:

1. Enable the 1000BASE-T connector loopback. Set register bit 24.0 to 1.
2. Disable pair swap correction. Set register bit 18.5 to 1.

3.19.6 SerDes Loopbacks

For test purposes, the SerDes and SerDes macro interfaces provides several data loops. The following illustration shows the SerDes loopbacks.

Figure 75 • **Data Loops of the SerDes Macro**

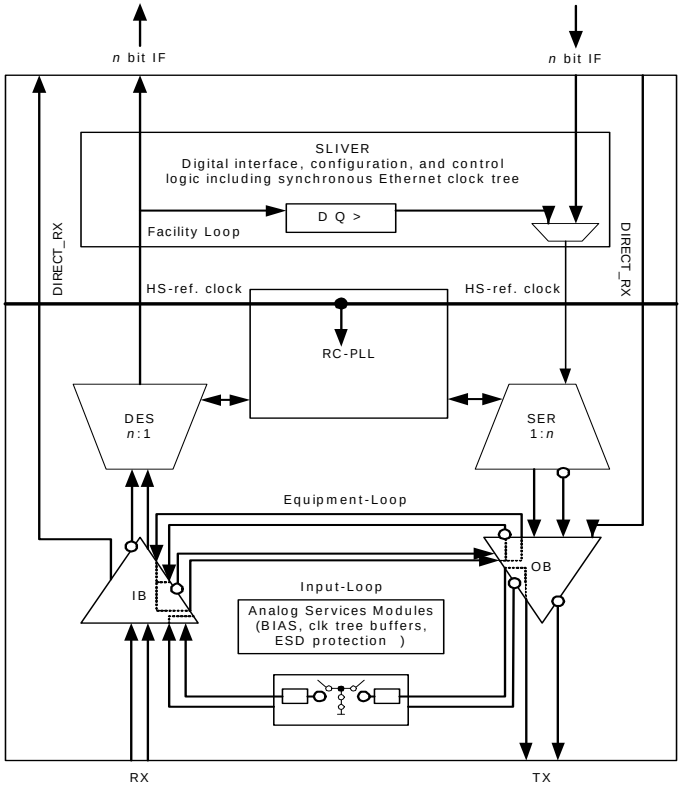

3.19.6.1 SGMII Mode

When the MAC interface is configured in SGMII mode, write the following 16-bit value to register 18G:

Bits 15:12 0x9

Bits 11:8: Port address (0x0 to 0x3)

Bits 7:4: Loopback type

Bits 3:0: 0x2

where loopback type is:

0x0: No loopback

0x2: Input loopback

0x4: Facility loopback

0x8: Equipment loopback

3.19.6.2 QSGMII Mode

When the MAC interface is configured in QSGMII mode, write the following 16-bit value to register 18G:

Bits 15:12 0x9

Bits 11:8: Port address (0x0)

Bits 7:4: Loopback type

Bits 3:0: 0x2

where loopback type is:

0x0: No loopback

0x2: Input loopback

0x4: Facility loopback

0x8: Equipment loopback

Note: Loopback configuration affects all ports associated with a QSGMII. Individual port loopback within a QSGMII is not possible.

3.19.6.3 Fiber Media Port Mode

When the SerDes is configured as a fiber media port, write the following 16-bit value to register 18G:

Bits 15:12: 0x8

Bits 11:8: Port address

Bits 7:4: Loopback type

Bits 3:0: 0x2

where port address is:

0x1: Fiber0 port

0x2: Fiber1 port

0x4: Fiber2 port

0x8: Fiber3 port

Port addresses for fiber media SerDes can be OR'ed together to address multiple ports using a single command. bit 18G.15 will be cleared when the internal configuration is complete.

3.19.6.4 Facility Loop

The recovered and de-multiplexer deserializer data output is looped back to the serializer data input and replaces the data delivered by the digital core. This test loop provides the possibility to test the complete analog macro data path from outside including input buffer, clock and data recovery, serialization and output buffer. The data received by the input buffer must be transmitted by the output buffer after some delay.

Additional configuration of the SerDes macros is required for facility loopback mode. When entering facility loopback mode, the set = 1 option should be run; when exiting facility loopback mode, the set = 0 option should be run.

```
PhyWrite(PhyBaseAddr, 31, 0x0010);
PhyWrite(PhyBaseAddr, 18, 0x8s03);
// where “s” is the physical address of the SerDes macro
PhyWrite(PhyBaseAddr, 18, 0xd7cb);
PhyWrite(PhyBaseAddr, 18, 0x8007);
tmp1 = PhyRead(PhyBaseAddr, 18);
tmp2 = tmp1 & 0x0ff0;
if (set)
    tmp3 = tmp2 | 0x0010;
else
    tmp3 = tmp2 & 0x0fe0;
tmp4 = tmp3 | 0x8006;
PhyWrite(PhyBaseAddr, 18, tmp4);
if (SGMII)
    PhyWrite(PhyBaseAddr, 18, 0x9p40);
// where “p” is the logical address of the SGMII interface
else
    PhyWrite(PhyBaseAddr, 18, 0x8p40);
// where “p” is the logical address of the Fiber media interface
// PhyBaseAddr is the 5-bit base address of the internal PHYs.
```

```
// The upper 3 bits are set by the PHYADD[4:2] pins and the
// lower 2 bits are 0.
```

Additional configuration of the enhanced SerDes macro is required for facility loopback mode. When entering facility loopback mode, the set = 1 option should be run; when exiting facility loopback mode, the set = 0 option should be run.

```
PhyWrite(PhyBaseAddr, 31, 0x0010);
PhyWrite(PhyBaseAddr, 18, 0x8013);
PhyWrite(PhyBaseAddr, 18, 0xd7cb);
PhyWrite(PhyBaseAddr, 18, 0x8007);
tmp1 = PhyRead(PhyBaseAddr, 18);
tmp2 = tmp1 & 0x0ff0;
if (set)
    tmp3 = tmp2 | 0x0100;
else
    tmp3 = tmp2 & 0x0ef0;
tmp4 = tmp3 | 0x8006;
PhyWrite(PhyBaseAddr, 18, tmp4);
PhyWrite(PhyBaseAddr, 18, 0x9c40);
// PhyBaseAddr is the 5-bit base address of the internal PHYs.
// The upper 3 bits are set by the PHYADD[4:2] pins and the
// lower 2 bits are 0.
```

3.19.6.5 Equipment Loop

The 1-bit data stream at the serializer output is looped back to the deserializer and replaces the received data stream from the input buffer. This test loop provides the possibility to verify the digital data path internally. The transmit data goes through the serialization, the clock and data recovery and deserialization before the data is fed back to the digital core.

Note: After entering equipment loopback mode, the following workaround should be run with set = 1 option in case external signal is not present; when exiting equipment loopback mode, the set = 0 option should be run:

SGMII/QSGMII SerDes

```
PhyWrite(<phy>, 31, 0x52b5);
PhyWrite(<phy>, 16, 0xa68c);
tmp17 = PhyRead(<phy>,17);
if (set)
tmp17 |= 0x0010; //Set SigDet as desired, Set bit 4
else // clear SigDet
tmp17 &= 0xffef; //Clear SigDet, bit 4
PhyWrite(<phy>, 17, tmp17);
PhyWrite(<phy>, 16, 0x868c);
PhyWrite(<phy>, 31, 0x0);
```

Fiber media SerDes

```
PhyWrite(<phy>, 31, 0x52b5);
PhyWrite(<phy>, 16, 0xa68a);
tmp17 = PhyRead(<phy>,17);
if (set)
tmp17 |= 0x0010; //Set SigDet as desired, Set bit 4
else // clear SigDet
tmp17 &= 0xffef; //Clear SigDet, bit 4
PhyWrite(<phy>, 17, tmp17);
PhyWrite(<phy>, 16, 0x868a);
PhyWrite(<phy>, 31, 0x0);
```

3.19.6.6 Input Loop

The received 1-bit data stream of the input buffer is looped back asynchronously to the output buffer. This test loop provides the possibility to test only the analog parts of the SGMII interface because only the input and output buffer are part of this loop.

Note: When the enhanced SerDes macro is in input loopback, the output is inverted relative to the input.

The following table shows the SerDes macro address map.

Table 34 • **SerDes Macro Address Map**

SerDes Macro	Physical Address (s)	Interface Logical Type (p)	Address
SerDes0	0x0	Fiber0	0x1
SerDes1	0x1	SGMII1	0x1
SerDes2	0x2	Fiber1	0x2
SerDes3	0x3	SGMII2	0x2
SerDes4	0x4	Fiber2	0x4
SerDes5	0x5	SGMII3	0x3
SerDes6	0x6	Fiber3	0x8

3.19.7 VeriPHY Cable Diagnostics

The VSC8574-01 includes a comprehensive suite of cable diagnostic functions that are available using SMI reads and writes. These functions enable a variety of cable operating conditions and status to be accessed and checked. The VeriPHY suite has the ability to identify the cable length and operating conditions and to isolate a variety of common faults that can occur on Cat5 twisted pair cabling.

For functional details of the VeriPHY suite and the operating instructions, see the ENT-AN0125 PHY, Integrated PHY-Switch VeriPHY - Cable Diagnostics application note.

3.19.8 JTAG Boundary Scan

The VSC8574-01 supports the test access port (TAP) and boundary scan architecture described in IEEE 1149.1. The device includes an IEEE 1149.1-compliant test interface, referred to as a JTAG TAP interface.

The JTAG boundary scan logic on the VSC8574-01, accessed using its TAP interface, consists of a boundary scan register and other logic control blocks. The TAP controller includes all IEEE-required signals (TMS, TCK, TDI, and TDO), in addition to the optional asynchronous reset signal TRST. The following illustration shows the TAP and boundary scan architecture.

Important When JTAG is not in use, the TRST pin must be tied to ground with a pull-down resistor for normal operation.

Figure 76 • **Test Access Port and Boundary Scan Architecture**

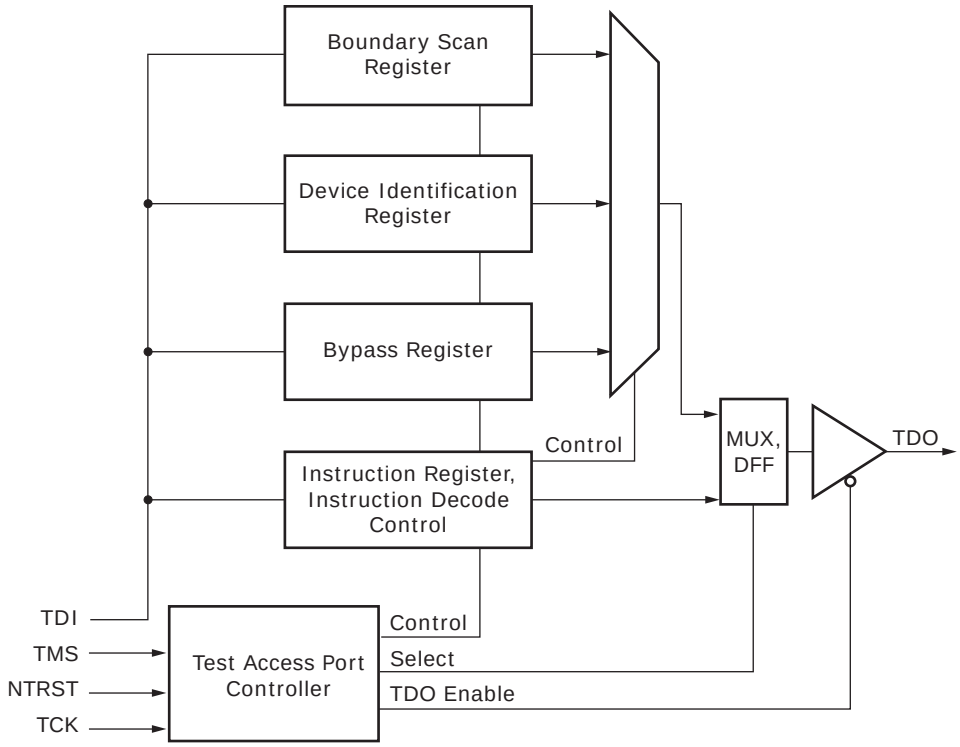

After a TAP reset, the device identification register is serially connected between TDI and TDO by default. The TAP instruction register is loaded either from a shift register when a new instruction is shifted in, or, if there is no new instruction in the shift register, a default value of 6'b100000 (IDCODE) is loaded. Using this method, there is always a valid code in the instruction register, and the problem of toggling instruction bits during a shift is avoided. Unused codes are mapped to the BYPASS instruction.

3.19.9 JTAG Instruction Codes

The VSC8574-01 supports the following instruction codes:

Table 35 • **JTAG Instruction Codes**

Instruction Code	Description
BYPASS	The bypass register contains a single shift-register stage and is used to provide a minimum-length serial path (one TCK clock period) between TDI and TDO to bypass the device when no test operation is required.
CLAMP	Allows the state of the signals driven from the component pins to be determined from the boundary scan register while the bypass register is selected as the serial path between TDI and TDO. While the CLAMP instruction is selected, the signals driven from the component pins do not change.
EXTEST	Allows tests of the off-chip circuitry and board-level interconnections by sampling input pins and loading data onto output pins. Outputs are driven by the contents of the boundary scan cells, which have to be updated with valid values, with the PRELOAD instruction, prior to the EXTEST instruction.

Table 35 • **JTAG Instruction Codes *(continued)***

Instruction Code	Description
HIGHZ	Places the component in a state in which all of its system logic outputs are placed in a high-impedance state. In this state, an in-circuit test system can drive signals onto the connections normally driven by a component output without incurring a risk of damage to the component. This makes it possible to use a board where not all of the components are compatible with the IEEE 1149.1 standard.
IDCODE	Provides the version number (bits 31:28), device family ID (bits 27:12), and the manufacturer identity (bits 11:1) to be serially read from the device.
SAMPLE/PRELOAD	Allows a snapshot of inputs and outputs during normal system operation to be taken and examined. It also allows data values to be loaded into the boundary scan cells prior to the selection of other boundary scan test instructions.
USERCODE	Provides the version number (bits 31:28), part number (bits 27:12), and the manufacturer identity (bits 11:1) to be serially read from the device.

The following tables provide information about the IDCODE and USERCODE binary values stored in the device JTAG registers.

Table 36 • **IDCODE JTAG Device Identification Register Descriptions**

Description	Device Version	Family ID	Manufacturing Identity	LSB
Bit field	31–28	27–12	11–1	0
Binary value	0000	1000 0101 0111 0100	000 0111 0100	1

Table 37 • **USERCODE JTAG Device Identification Register Descriptions**

Description	Device Version	Model Number	Manufacturing Identity	LSB
Bit field	31–28	27–12	11–1	0
Binary value	0010	1000 0101 0000 0100	000 0111 0100	1

The following table provides information about the location and IEEE compliance of the JTAG instruction codes used in the VSC8574-01. Instructions not explicitly listed in the table are reserved. For more information about these IEEE specifications, visit the IEEE Web site at www.IEEE.org.

Table 38 • **JTAG Instruction Code IEEE Compliance**

Instruction	Code	Selected Register	Register Width	IEEE 1149.1
EXTEST	6'b000000	Boundary Scan	161	Mandatory
SAMPLE/PRELOAD	6'b000001	Boundary Scan	161	Mandatory
IDCODE	6'b100000	Device Identification	32	Optional
USERCODE	6'b100101	Device Identification	32	Optional
CLAMP	6'b000010	Bypass Register	1	Optional
HIGHZ	6'b000101	Bypass Register	1	Optional
BYPASS	6'b111111	Bypass Register	1	Mandatory

3.19.10 Boundary Scan Register Cell Order

All inputs and outputs are observed in the boundary scan register cells. All outputs are additionally driven by the contents of boundary scan register cells. Bidirectional pins have all three related boundary scan register cells: input, output, and control.

The complete boundary scan cell order is available as a BSDL file format on the Microsemi Web site at www.Microsemi.com.

3.20 100BASE-FX Halt Code Transmission and Reception

The VSC8574-01 device supports transmission and reception of halt code words in 100BASE-FX mode. There are three separate scripts provided to initiate transmission of halt code words, stop transmission of halt code words and detect reception of halt code words. Use the following scripts to implement each of these functions:

Sending the HALT codeword:

```
PhyWrite(<phy>, 31, 0x52b5);
PhyWrite(<phy>, 16, 0xac82);
reg18 = PhyRead(<phy>, 18);
reg18 = (reg18 & 0xf0) | 0x0c;
PhyWrite(<phy>, 18, reg18);
PhyWrite(<phy>, 17, 0xe739);
PhyWrite(<phy>, 16, 0x8c82);

PhyWrite< <phy>, 16, 0xbe80);
reg17 = PhyRead(<phy>, 17);
reg18 = PhyRead(<phy>, 18);
reg17 = reg17 | 0x0040;
PhyWrite(<phy>, 18, reg18);
PhyWrite(<phy>, 17, reg17);
PhyWrite(<phy>, 16, 0x9e80);
PhyWrite(<phy>, 31, 0);
```

Stop sending the HALT codeword:

```
PhyWrite(<phy>, 31, 0x52b5);
PhyWrite< <phy>, 16, 0xbe80);
reg17 = PhyRead(<phy>, 17);
reg18 = PhyRead(<phy>, 18);
reg17 = reg17 & ~0x0040;
PhyWrite(<phy>, 18, reg18);
PhyWrite(<phy>, 17, reg17);
PhyWrite(<phy>, 16, 0x9e80);
PhyWrite(<phy>, 31, 0);
```

Detecting whether the HALT codeword is being sent by the link partner:

```
long patternset[5] = {
     0xce739,
     0xe739c,
     0x739ce,
     0x39ce7,
     0x9ce73
};
```

Turning on the pattern checker:

```
PhyWrite(<phy>, 31, 0x52b5);
PhyWrite(<phy>, 16, 0xbe80);
reg18 = PhyRead(<phy>, 18);
reg17 = PhyRead(<phy>, 17);
reg17 = reg17 | 4;
```

```
PhyWrite(<phy>, 18, reg18);
PhyWrite(<phy>, 17, reg17);
PhyWrite(<phy>, 16, 0x9e80);
```

Sweeping through all five pattern shifts checking for a match:

```
for (i = 0, matchfailed = 1; i < 5 && matchfailed; ++i) {
PhyWrite(<phy>, 16, 0xac84);
reg18 = PhyRead(<phy>, 18);
reg18 = (reg18 & 0xf0) | (patternset[i] >> 16)
PhyWrite(<phy>, 18, reg18);
PhyWrite(<phy>, 17, patternset[i] & 0xffff);
PhyWrite(<phy>, 16, 0x8c84);

PhyWrite(<phy>, 16, 0xbe84); // Dummy read to clear latched mismatch
PhyWrite(<phy>, 16, 0xbe84); // Read pattern check failure status
matchfailed = PhyRead(<phy>, 17) & 1; // Extract pattern check failure status
}
```

Turning off the pattern checker:

```
PhyWrite(<phy>, 16, 0xbe80);
reg18 = PhyRead(<phy>, 18);
reg17 = PhyRead(<phy>, 17);
reg17 = reg17 & ~4;
PhyWrite(<phy>, 18, reg18);
PhyWrite(<phy>, 17, reg17);
PhyWrite(<phy>, 16, 0x9e80);

PhyWrite(<phy>, 31, 0);

HALT_codeword_detected =!matchfailed;
```

3.21 Configuration

The VSC8574-01 can be configured by setting internal memory registers using the management interface. To configure the device, perform the following steps:

1. COMA_MODE active, drive high (optional).
2. Apply power.
3. Apply RefCLK and IEEE 1588 Reference Clock.
4. Release reset, drive high. Power and clock must be stable before releasing reset.
5. Wait 120 ms minimum.
6. Apply patch from PHY_API (required for production released optional for board testing).
7. Configure register 19G for MAC mode (to access register 19G, register 31 must be 0x10). Read register 19G. Set bits 15:14, MAC configuration as follows:
   00: SGMII
   01: QSGMII
   10: Reserved
   11: Reserved
   Write new register 19G.
8. Configure register 18G for MAC on all 4 PHYs write:
   SGMII: 0x80F0
   QSGMII: 0x80E0
   Read register 18G until bit 15 equals 0.
9. If Fiber Media on all 4 PHYs configure register 18G by writing:
   Media 1000BASE-X: 0x8FC1
   Media 100BASE-FX: 0x8FD1
10. If Fiber Media read register 18G till bit 15 equals 0.
11. Configure register 23 for MAC and Media mode (to access register 23, register 31 must be 0). Read register 23. Set bits 10:8 as follows:
    000: Copper

010: 1000BASE-X
011: 100BASE-FX
Write new register 23.

12. Software reset. Read register 0 (to access register 0, register 31 must be 0). Set bit 15 to 1. Write new register 0.
13. Read register 0 until bit 15 equals 0.
14. Release the COMA_MODE pin, drive low (only necessary if COMA_MODE pin is driven high or unconnected).

3.21.1 Initialization

The COMA_MODE pin provides an optional feature that may be used to control when the PHYs become active. The typical usage is to keep the PHYs from becoming active before they have been fully initialized. For more information, see Configuration, page 91. By not being active until after complete initialization keeps links from going up and down. Alternatively the COMA_MODE pin may be connected low (ground) and the PHYs will be fully active once out of reset.

4 Registers

This section provides information about how to configure the VSC8574-01 using its internal memory registers and the management interface. The registers marked reserved and factory test should not be read or written to, because doing so may produce undesired effects.

The default value documented for registers is based on the value at reset; however, in some cases, that value may change immediately after reset.

The access type for each register is shown using the following abbreviations:

- RO: Read Only
- ROCR: Read Only, Clear on Read
- RO/LH: Read Only, Latch High
- RO/LL: Read Only, Latch Low
- R/W: Read and Write
- RWSC: Read Write Self Clearing

The VSC8574-01 uses several different types of registers:

- IEEE Clause 22 device registers with addresses from 0 to 31
- Three pages of extended registers with addresses from 16E1–30E1, 16E2–30E2, and 16E3–30E3
- General-purpose registers with addresses from 0G to 30G
- IEEE Clause 45 devices registers accessible through the Clause 22 registers 13 and 14 to support IEEE 802.3az-2010 energy efficient Ethernet registers

The following illustration shows the relationship between the device registers and their address spaces.

Figure 77 • **Register Space Diagram**

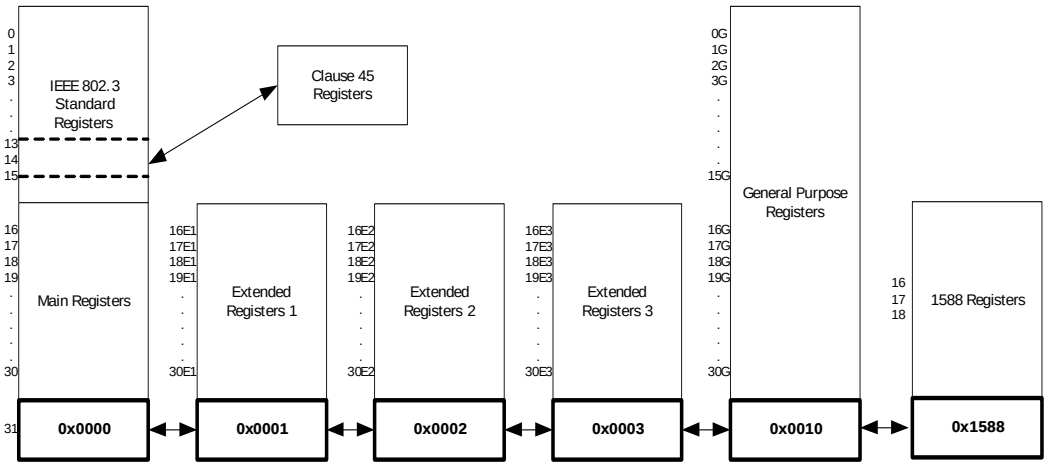

Reserved Registers For main registers 16–31, extended registers 16E1–30E1, 16E2–30E2, 16E3–30E3, and general purpose registers 0G–30G, any bits marked as Reserved should be processed as read-only and their states as undefined.

Reserved Bits In writing to registers with reserved bits, use a read-modify-then-write technique, where the entire register is read but only the intended bits to be changed are modified. Reserved bits cannot be changed and their read state cannot be considered static or unchanging.

4.1 Register and Bit Conventions

Registers are referred to by their address and bit number in decimal notation. A range of bits is indicated with a colon. For example, a reference to address 26, bits 15 through 14 is shown as 26.15:14.

A register with an E and a number attached (example 27E1) means it is a register contained within extended register page number 1. A register with a G attached (example 13G) means it is a GPIO page register.

Bit numbering follows the IEEE standard with bit 15 being the most significant bit and bit 0 being the least significant bit.

4.2 IEEE 802.3 and Main Registers

In the VSC8574-01, the page space of the standard registers consists of the IEEE 802.3 standard registers and the Microsemi standard registers. The following table lists the names of the registers associated with the addresses as specified by IEEE 802.3.

Table 39 • **IEEE 802.3 Registers**

Address	Name
0	Mode Control
1	Mode Status
2	PHY Identifier 1
3	PHY Identifier 2
4	Autonegotiation Advertisement
5	Autonegotiation Link Partner Ability
6	Autonegotiation Expansion
7	Autonegotiation Next-Page Transmit
8	Autonegotiation Link Partner Next-Page Receive
9	1000BASE-T Control
10	1000BASE-T Status
11–12	Reserved
13	Clause 45 Access Registers from IEEE 802.3 Table 22-6 and 22.24.3.11-12 and Annex 22D
14	Clause 45 Access Registers from IEEE 802.3 Table 22-6 and 22.24.3.11-12 and Annex 22D
15	1000BASE-T Status Extension 1

The following table lists the names of the registers in the main page space of the device. These registers are accessible only when register address 31 is set to 0x0000.

Table 40 • **Main Registers**

Address	Name
16	100BASE-TX status extension
17	1000BASE-T status extension 2
18	Bypass control
19	Error Counter 1
20	Error Counter 2
21	Error Counter 3
22	Extended control and status
23	Extended PHY control 1

Table 40 • **Main Registers *(continued)***

Address	Name
24	Extended PHY control 2
25	Interrupt mask
26	Interrupt status
27	Reserved
28	Auxiliary control and status
29	LED mode select
30	LED behavior
31	Extended register page access

4.2.1 Mode Control

The device register at memory address 0 controls several aspects of VSC8574-01 functionality. The following table shows the available bit settings in this register and what they control.

Table 41 • **Mode Control, Address 0 (0x00)**

Bit	Name	Access	Description	Default
15	Software reset	R/W	Self-clearing. Restores all serial management interface (SMI) registers to default state, except for sticky and super-sticky bits. 1: Reset asserted. 0: Reset de-asserted. Wait [X] after setting this bit to initiate another SMI register access.	0
14	Loopback	R/W	1: Loopback enabled. 0: Loopback disabled. When loop back is enabled, the device functions at the current speed setting and with the current duplex mode setting (bits 6, 8, and 13 of this register).	0
13	Forced speed selection LSB	R/W	Least significant bit. MSB is bit 6. 00: 10 Mbps. 01: 100 Mbps. 10: 1000 Mbps. 11: Reserved.	0
12	Autonegotiation enable	R/W	1: Autonegotiation enabled. 0: Autonegotiation disabled.	1
11	Power-down	R/W	1: Power-down enabled.	0
10	Isolate	R/W	1: Disconnect the MAC-side interface of the device from the rest of the datapath. Traffic entering the PHY from either the MAC-side or media-side interface will terminate inside the PHY.	0
9	Restart autonegotiation	R/W	Self-clearing bit. 1: Restart autonegotiation on media interface.	0
8	Duplex(1)	R/W	1: Full-duplex. 0: Half-duplex.	0
7	Collision test enable	R/W	1: Collision test enabled.	0

Table 41 • **Mode Control, Address 0 (0x00) *(continued)***

Bit	Name	Access	Description	Default
6	Forced speed selection MSB	R/W	Most significant bit. LSB is bit 13.(2) 00: 10 Mbps. 01: 100 Mbps. 10: 1000 Mbps. 11: Reserved.	10
5	Unidirectional enable	R/W	When bit 0.12 = 1 or bit 0.8 = 0, this bit is ignored. When bit 0.12 = 0 and bit 0.8 = 1, the behavior is as follows: 1: Enable transmit from media independent interface regardless of whether the PHY has determined that a valid link has been established. 0: Enable transmit from media independent interface only when the PHY has determined that a valid link has been established. **Note:** This bit is only applicable in 100BASE-FX and 1000BASE-X fiber media modes.	0
4:0	Reserved		Reserved.	00000

1. Half-duplex is not supported when the 1588 unit is operating.
2. Before selecting the 1000 Mbps forced speed mode, manually configure the PHY as master or slave by setting bit 11 in register 9 (1000BASE-T Control). Each time the link drops, the PHY needs to be powered down manually to enable it to link up again using the master/slave setting specified in register 9.11.

4.2.2 Mode Status

The register at address 1 in the device main registers space allows you to read the currently enabled mode setting. The following table shows possible readouts of this register.

Table 42 • **Mode Status, Address 1 (0x01)**

Bit	Name	Access	Description	Default
15	100BASE-T4 capability	RO	1: 100BASE-T4 capable.	0
14	100BASE-TX FDX capability	RO	1: 100BASE-TX FDX capable.	1
13	100BASE-TX HDX capability	RO	1: 100BASE-TX HDX capable.	1
12	10BASE-T FDX capability	RO	1: 10BASE-T FDX capable.	1
11	10BASE-T HDX capability	RO	1: 10BASE-T HDX capable.	1
10	100BASE-T2 FDX capability	RO	1: 100BASE-T2 FDX capable.	0
9	100BASE-T2 HDX capability	RO	1: 100BASE-T2 HDX capable.	0
8	Extended status enable	RO	1: Extended status information present in register 15.	1

Table 42 • **Mode Status, Address 1 (0x01) *(continued)***

Bit	Name	Access	Description	Default
7	Unidirectional ability	RO	1: PHY able to transmit from media independent interface regardless of whether the PHY has determined that a valid link has been established. 0: PHY able to transmit from media independent interface only when the PHY has determined that a valid link has been established. **Note:** This bit is only applicable to 100BASE-FX and 1000BASE-X fiber media modes.	1
6	Preamble suppression capability	RO	1: MF preamble can be suppressed. 0: MF required.	1
5	Autonegotiation complete	RO	1: Autonegotiation complete.	0
4	Remote fault	RO	Latches high. 1: Far-end fault detected.	0
3	Autonegotiation capability	RO	1: Autonegotiation capable.	1
2	Link status	RO	Latches low. 1: Link is up.	0
1	Jabber detect	RO	Latches high. 1: Jabber condition detected.	0
0	Extended capability	RO	1: Extended register capable.	1

4.2.3 Device Identification

All 16 bits in both register 2 and register 3 in the VSC8574-01 are used to provide information associated with aspects of the device identification. The following tables list the expected readouts.

Table 43 • **Identifier 1, Address 2 (0x02)**

Bit	Name	Access	Description	Default
15:0	Organizationally unique identifier (OUI)	RO	OUI most significant bits (3:18)	0×0007

Table 44 • **Identifier 2, Address 3 (0x03)**

Bit	Name	Access	Description	Default
15:10	OUI	RO	OUI least significant bits (19:24)	000001
9:4	Microsemi model number	RO	VSC8574-01 (0xA)	001010
3:0	Device revision number	RO	Revision D	0010

4.2.4 Autonegotiation Advertisement

The bits in address 4 in the main registers space control the VSC8574-01 ability to notify other devices of the status of its autonegotiation feature. The following table shows the available settings and readouts.

Table 45 • **Device Autonegotiation Advertisement, Address 4 (0x04)**

Bit	Name	Access	Description	Default
15	Next page transmission request	R/W	1: Request enabled	0
14	Reserved	RO	Reserved	0
13	Transmit remote fault	R/W	1: Enabled	0
12	Reserved	R/W	Reserved	0
11	Advertise asymmetric pause	R/W	1: Advertises asymmetric pause	0
10	Advertise symmetric pause	R/W	1: Advertises symmetric pause	0
9	Advertise100BASE-T4	R/W	1: Advertises 100BASE-T4	0
8	Advertise100BASE-TX FDX	R/W	1: Advertise 100BASE-TX FDX	1
7	Advertise100BASE-TX HDX	R/W	1: Advertises 100BASE-TX HDX	1
6	Advertise10BASE-T FDX	R/W	1: Advertises 10BASE-T FDX	1
5	Advertise10BASE-T HDX	R/W	1: Advertises 10BASE-T HDX	1
4:0	Advertise selector	R/W		00001

4.2.5 Link Partner Autonegotiation Capability

The bits in main register 5 can be used to determine if the Cat5 link partner (LP) used with the VSC8574-01 is compatible with the autonegotiation functionality.

Table 46 • **Autonegotiation Link Partner Ability, Address 5 (0x05)**

Bit	Name	Access	Description	Default
15	LP next page transmission request	RO	1: Requested	0
14	LP acknowledge	RO	1: Acknowledge	0
13	LP remote fault	RO	1: Remote fault	0
12	Reserved	RO	Reserved	0
11	LP advertise asymmetric pause	RO	1: Capable of asymmetric pause	0
10	LP advertise symmetric pause	RO	1: Capable of symmetric pause	0
9	LP advertise 100BASE-T4	RO	1: Capable of 100BASE-T4	0
8	LP advertise 100BASE-TX FDX	RO	1: Capable of 100BASE-TX FDX	0
7	LP advertise 100BASE-TX HDX	RO	1: Capable of 100BASE-TX HDX	0
6	LP advertise 10BASE-T FDX	RO	1: Capable of 10BASE-T FDX	0
5	LP advertise 10BASE-T HDX	RO	1: Capable of 10BASE-T HDX	0
4:0	LP advertise selector	RO		00000

4.2.6 Autonegotiation Expansion

The bits in main register 6 work together with those in register 5 to indicate the status of the LP autonegotiation functioning. The following table shows the available settings and readouts.

Table 47 • **Autonegotiation Expansion, Address 6 (0x06)**

Bit	Name	Access	Description	Default
15:5	Reserved	RO	Reserved.	All zeros
4	Parallel detection fault	RO	This bit latches high. 1: Parallel detection fault.	0
3	LP next page capable	RO	1: LP is next page capable.	0
2	Local PHY next page capable	RO	1: Local PHY is next page capable.	1
1	Page received	RO	This bit latches low. 1: New page is received.	0
0	LP is autonegotiation capable	RO	1: LP is capable of autonegotiation.	0

4.2.7 Transmit Autonegotiation Next Page

The settings in register 7 in the main registers space provide information about the number of pages in an autonegotiation sequence. The following table shows the settings available.

Table 48 • **Autonegotiation Next Page Transmit, Address 7 (0x07)**

Bit	Name	Access	Description	Default
15	Next page	R/W	1: More pages follow	0
14	Reserved	RO	Reserved	0
13	Message page	R/W	1: Message page 0: Unformatted page	1
12	Acknowledge 2	R/W	1: Complies with request 0: Cannot comply with request	0
11	Toggle	RO	1: Previous transmitted LCW = 0 0: Previous transmitted LCW = 1	0
10:0	Message/unformatted code	R/W		00000000001

4.2.8 Autonegotiation Link Partner Next Page Receive

The bits in register 8 of the main register space work together with register 7 to determine certain aspects of the LP autonegotiation. The following table shows the possible readouts.

Table 49 • **Autonegotiation LP Next Page Receive, Address 8 (0x08)**

Bit	Name	Access	Description	Default
15	LP next page	RO	1: More pages follow	0
14	Acknowledge	RO	1: LP acknowledge	0
13	LP message page	RO	1: Message page 0: Unformatted page	0
12	LP acknowledge 2	RO	1: LP complies with request	0
11	LP toggle	RO	1: Previous transmitted LCW = 0 0: Previous transmitted LCW = 1	0
10:0	LP message/unformatted code	RO		All zeros

4.2.9 1000BASE-T Control

The VSC8574-01's 1000BASE-T functionality is controlled by the bits in register 9 of the main register space. The following table shows the settings and readouts available.

Table 50 • **1000BASE-T Control, Address 9 (0x09)**

Bit	Name	Access	Description	Default
15:13	Transmitter test mode	R/W	000: Normal 001: Mode 1: Transmit waveform test 010: Mode 2: Transmit jitter test as master 011: Mode 3: Transmit jitter test as slave 100: Mode 4: Transmitter distortion test 101–111: Reserved	000
12	Master/slave manual configuration	R/W	1: Master/slave manual configuration enabled	0
11	Master/slave value	R/W	This register is only valid when bit 9.12 is set to 1. 1: Configure PHY as master during negotiation 0: Configure PHY as slave during negotiation	0
10	Port type	R/W	1: Multi-port device 0: Single-port device	1
9	1000BASE-T FDX capability	R/W	1: PHY is 1000BASE-T FDX capable	1
8	1000BASE-T HDX capability	R/W	1: PHY is 1000BASE-T HDX capable	1
7:0	Reserved	R/W	Reserved	0x00

Note: Transmitter test mode (bits 15:13) operates in the manner described in IEEE 802.3 section 40.6.1.1.2. When using any of the transmitter test modes, the automatic media sense feature must be disabled. For more information, see Extended PHY Control Set 1, page 105.

4.2.10 1000BASE-T Status

The bits in register 10 of the main register space can be read to obtain the status of the 1000BASE-T communications enabled in the device. The following table shows the readouts.

Table 51 • **1000BASE-T Status, Address 10 (0x0A)**

Bit	Name	Access	Description	Default
15	Master/slave configuration fault	RO	This bit latches high. 1: Master/slave configuration fault detected 0: No master/slave configuration fault detected	0
14	Master/slave configuration resolution	RO	1: Local PHY configuration resolved to master 0: Local PHY configuration resolved to slave	1
13	Local receiver status	RO	1: Local receiver is operating normally	0
12	Remote receiver status	RO	1: Remote receiver OK	0
11	LP 1000BASE-T FDX capability	RO	1: LP 1000BASE-T FDX capable	0
10	LP 1000BASE-T HDX capability	RO	1: LP 1000BASE-T HDX capable	0
9:8	Reserved	RO	Reserved	00

Table 51 • **1000BASE-T Status, Address 10 (0x0A) *(continued)***

Bit	Name	Access	Description	Default
7:0	Idle error count	RO	Self-clearing register	0x00

4.2.11 MMD Access Control Register

The bits in register 13 of the main register space are a window to the EEE registers as defined in IEEE 802.3az-2010 Clause 45.

Table 52 • **MMD EEE Access, Address 13 (0x0D)**

Bit	Name	Access	Description
15:14	Function	R/W	00: Address 01: Data, no post increment 10: Data, post increment for read and write 11: Data, post increment for write only
13:5	Reserved	R/W	Reserved
4:0	DVAD	R/W	Device address as defined in IEEE 802.3az-2010 table 45–1

4.2.12 MMD Address or Data Register

The bits in register 14 of the main register space are a window to the EEE registers as defined in IEEE 802.3az-2010 Clause 45.

Table 53 • **MMD Address or Data Register, Address 14 (0x0E)**

Bit	Name	Access	Description
15:0	Register Address/Data	R/W	When register 13.15:14 = 2'b00, address of register of the device that is specified by 13.4:0. Otherwise, the data to be written to or read from the register.

4.2.13 1000BASE-T Status Extension 1

Register 15 provides additional information about the operation of the device 1000BASE-T communications. The following table shows the readouts available.

Table 54 • **1000BASE-T Status Extension 1, Address 15 (0x0F)**

Bit	Name	Access	Description	Default
15	1000BASE-X FDX capability	RO	1: PHY is 1000BASE-X FDX capable	1
14	1000BASE-X HDX capability	RO	1: PHY is 1000BASE-X HDX capable	1
13	1000BASE-T FDX capability	RO	1: PHY is 1000BASE-T FDX capable	1
12	1000BASE-T HDX capability	RO	1: PHY is 1000BASE-T HDX capable	1
11:0	Reserved	RO	Reserved	0x000

4.2.14 100BASE-TX/FX Status Extension

Register 16 in the main registers page space of the VSC8574-01 provides additional information about the status of the device's 100BASE-TX/100BASE-FX operation.

Table 55 • **100BASE-TX/FX Status Extension, Address 16 (0x10)**

Bit	Name	Access	Description	Default
15	100BASE-TX/FX Descrambler	RO	1: Descrambler locked	0
14	100BASE-TX/FX lock error	RO	Self-clearing bit. 1: Lock error detected	0
13	100BASE-TX/FX disconnect state	RO	Self-clearing bit. 1: PHY 100BASE-TX link disconnect detected	0
12	100BASE-TX/FX current link status	RO	1: PHY 100BASE-TX link active	0
11	100BASE-TX/FX receive error	RO	Self-clearing bit. 1: Receive error detected	0
10	100BASE-TX/FX transmit error	RO	Self-clearing bit. 1: Transmit error detected	0
9	100BASE-TX/FX SSD error	RO	Self-clearing bit. 1: Start-of-stream delimiter error detected	0
8	100BASE-TX/FX ESD error	RO	Self-clearing bit. 1: End-of-stream delimiter error detected	0
7:0	Reserved	RO	Reserved	

4.2.15 1000BASE-T Status Extension 2

The second status extension register is at address 17 in the device main registers space. It provides information about another set of parameters associated with 1000BASE-T communications. For information about the first status extension register, see Table 54, page 101.

Table 56 • **1000BASE-T Status Extension 2, Address 17 (0x11)**

Bit	Name	Access	Description	Default
15	1000BASE-T descrambler	RO	1: Descrambler locked.	0
14	1000BASE-T lock error	RO	Self-clearing bit. 1: Lock error detected	0
13	1000BASE-T disconnect state	RO	Self-clearing bit. 1: PHY 1000BASE-T link disconnect detected	0
12	1000BASE-T current link status	RO	1: PHY 1000BASE-T link active	0
11	1000BASE-T receive error	RO	Self-clearing bit. 1: Receive error detected	0
10	1000BASE-T transmit error	RO	Self-clearing bit. 1: Transmit error detected	0
9	1000BASE-T SSD error	RO	Self-clearing bit. 1: Start-of-stream delimiter error detected	0

Table 56 • **1000BASE-T Status Extension 2, Address 17 (0x11) *(continued)***

Bit	Name	Access	Description	Default
8	1000BASE-T ESD error	RO	Self-clearing bit. 1: End-of-stream delimiter error detected	0
7	1000BASE-T carrier extension error	RO	Self-clearing bit. 1: Carrier extension error detected	0
6	Non-compliant BCM5400 detected	RO	1: Non-compliant BCM5400 link partner detected	0
5	MDI crossover error	RO	1: MDI crossover error was detected	0
4:0	Reserved	RO	Reserved	

4.2.16 Bypass Control

The bits in this register control aspects of functionality in effect when the device is disabled for the purpose of traffic bypass. The following table shows the settings available.

Table 57 • **Bypass Control, Address 18 (0x12)**

Bit	Name	Access	Description	Default
15	Transmit disable	R/W	1: PHY transmitter disabled	0
14	4B5B encoder/decoder	R/W	1: Bypass 4B/5B encoder/decoder	0
13	Scrambler	R/W	1: Bypass scrambler	0
12	Descrambler	R/W	1: Bypass descrambler	0
11	PCS receive	R/W	1: Bypass PCS receiver	0
10	PCS transmit	R/W	1: Bypass PCS transmit	0
9	LFI timer	R/W	1: Bypass Link Fail Inhibit (LFI) timer	0
8	Reserved	RO	Reserved	
7	HP Auto-MDIX at forced 10/100	R/W	Sticky bit. 1: Disable HP Auto-MDIX at forced 10/100 speeds	1
6	Non-compliant BCM5400 detect disable	R/W	Sticky bit. 1: Disable non-compliant BCM5400 detection	0
5	Disable pair swap correction (HP Auto-MDIX when autonegotiation enabled)	R/W	Sticky bit. 1: Disable the automatic pair swap correction	0
4	Disable polarity correction	R/W	Sticky bit. 1: Disable polarity inversion correction on each subchannel	0
3	Parallel detect control	R/W	Sticky bit. 1: Do not ignore advertised ability 0: Ignore advertised ability	1
2	Pulse shaping filter	R/W	1: Disable pulse shaping filter	0
1	Disable automatic 1000BASE-T next page exchange	R/W	Sticky bit. 1: Disable automatic 1000BASE T next page exchanges	0
0	Reserved	RO	Reserved	

Note: If bit 18.1 is set to 1 in this register, automatic exchange of next pages is disabled, and control is returned to the user through the SMI after the base page is exchanged. The user then must send the correct sequence of next pages to the link partner, determine the common capabilities, and force the device into the correct configuration following the successful exchange of pages.

4.2.17 Error Counter 1

The bits in register 19 provide an error counter. The following table shows the settings available.

Table 58 • **Extended Control and Status, Address 19 (0x13)**

Bit	Name	Access	Description	Default
15:8	Reserved	RO	Reserved.	
7:0	100/1000 receive error counter	RO	8-bit counter that saturates when it reaches 255. These bits are self-clearing when read.	0x00

4.2.18 Error Counter 2

The bits in register 20 provide an error counter. The following table shows the settings available.

Table 59 • **Extended Control and Status, Address 20 (0x14)**

Bit	Name	Access	Description	Default
15:8	Reserved	RO	Reserved.	
7:0	100/1000 false carrier counter	RO	8-bit counter that saturates when it reaches 255. These bits are self-clearing when read.	0x00

4.2.19 Error Counter 3

The bits in register 21 provide an error counter. The following table shows the settings available.

Table 60 • **Extended Control and Status, Address 21 (0x15)**

Bit	Name	Access	Description	Default
15:8	Reserved	RO	Reserved.	
7:0	Copper media link disconnect counter	RO	8-bit counter that saturates when it reaches 255. These bits are self-clearing when read.	0x00

4.2.20 Extended Control and Status

The bits in register 22 provide additional device control and readouts. The following table shows the settings available.

Table 61 • **Extended Control and Status, Address 22 (0x16)**

Bit	Name	Access	Description	Default
15	Force 10BASE-T link high	R/W	Sticky bit. 1: Bypass link integrity test 0: Enable link integrity test	0
14	Jabber detect disable	R/W	Sticky bit. 1: Disable jabber detect	0
13	Disable 10BASE-T echo	R/W	Sticky bit. 1: Disable 10BASE-T echo	1
12	Disable SQE mode	R/W	Sticky bit. 1: Disable SQE mode	1

Table 61 • **Extended Control and Status, Address 22 (0x16) *(continued)***

Bit	Name	Access	Description	Default
11:10	10BASE-T squelch control	R/W	Sticky bit. 00: Normal squelch 01: Low squelch 10: High squelch 11: Reserved	00
9	Sticky reset enable	R/W	Super-sticky bit. 1: Enabled	1
8	EOF Error	RO	This bit is self-clearing. 1: EOF error detected	0
7	10BASE-T disconnect state	RO	This bit is self-clearing. 1: 10BASE-T link disconnect detected	0
6	10BASE-T link status	RO	1: 10BASE-T link active	0
5:1	Reserved	RO	Reserved	
0	SMI broadcast write	R/W	Sticky bit. 1: Enabled	0

The following information applies to the extended control and status bits:

- When bit 22.15 is set, the link integrity state machine is bypassed and the PHY is forced into a link pass status.
- When bits 22.11:10 are set to 00, the squelch threshold levels are based on the IEEE standard for 10BASE-T. When set to 01, the squelch level is decreased, which can improve the bit error rate performance on long loops. When set to 10, the squelch level is increased and can improve the bit error rate in high-noise environments.
- When bit 22.9 is set, all sticky register bits retain their values during a software reset. Clearing this bit causes all sticky register bits to change to their default values upon software reset. Super-sticky bits retain their values upon software reset regardless of the setting of bit 22.9.
- When bit 22.0 is set, if a write to any PHY register (registers 0–31, including extended registers), the same write is broadcast to all PHYs. For example, if bit 22.0 is set to 1 and a write to PHY0 is executed (register 0 is set to 0x1040), all PHYs' register 0s are set to 0x1040.Table 41, page 95Disabling this bit restores normal PHY write operation. Reads are still possible when this bit is set, but the value that is read corresponds only to the particular PHY being addressed.

4.2.21 Extended PHY Control Set 1

The following table shows the settings available.

Table 62 • **Extended PHY Control 1, Address 23 (0x17)**

Bit	Name	Access	Description	Default
15:13	Reserved	R/W	Reserved	0
12	MAC interface mode	R/W	Super-sticky bit. 0: SGMII 1: 1000BASE-X. **Note:** Register 19G.15:14 must be = 00 for this selection to be valid.	0
11	AMS preference	R/W	Super-sticky bit. 1: Cat5 copper preferred. 0: SerDes fiber/SFP preferred.	0

Table 62 • **Extended PHY Control 1, Address 23 (0x17) *(continued)***

Bit	Name	Access	Description	Default
10:8	Media operating mode	R/W	Super-sticky bits. 000: Cat5 copper only. 001: SerDes fiber/SFP protocol transfer mode only. 010: 1000BASE-X fiber/SFP media only with autonegotiation performed by the PHY. 011: 100BASE-FX fiber/SFP on the fiber media pins only. 101: Automatic media sense (AMS) with Cat5 media or SerDes fiber/SFP protocol transfer mode. 110: AMS with Cat5 media or 1000BASE-X fiber/SFP media with autonegotiation performed by PHY. 111: AMS with Cat5 media or 100BASE-FX fiber/SFP media. 100: AMS.	000
7:6	Force AMS override	R/W	00: Normal AMS selection 01: Force AMS to select SerDes media only 10: Force AMS to select copper media only 11: Reserved	00
5:4	Reserved	RO	Reserved.	
3	Far-end loopback mode	R/W	1: Enabled.	0
2:0	Reserved	RO	Reserved.	

Note: After configuring bits 13:8 of the extended PHY control register set 1, a software reset (register 0, bit 15) must be written to change the device operating mode. On read, these bits only indicate the actual operating mode and not the pending operating mode setting before a software reset has taken place.

4.2.22 Extended PHY Control Set 2

The second set of extended controls is located in register 24 in the main register space for the device. The following table shows the settings and readouts available.

Table 63 • **Extended PHY Control 2, Address 24 (0x18)**

Bit	Name	Access	Description	Default
15:13	100BASE-TX edge rate control	R/W	Sticky bit. 011: +5 edge rate (slowest) 010: +4 edge rate 001: +3 edge rate 000: +2 edge rate 111: +1 edge rate 110: Default edge rate 101: –1 edge rate 100: –2 edge rate (fastest)	001
12	PICMG 2.16 reduced power mode	R/W	Sticky bit. 1: Enabled	0
11:6	Reserved	RO	Reserved	

Table 63 • **Extended PHY Control 2, Address 24 (0x18) *(continued)***

Bit	Name	Access	Description	Default
5:4	Jumbo packet mode	R/W	Sticky bit. 00: Normal IEEE 1.5 kB packet length 01: 9 kB jumbo packet length (12 kB with 60 ppm or better reference clock) 10: 12 kB jumbo packet length (16 kB with 70 ppm or better reference clock) 11: Reserved	00
3:1	Reserved	RO	Reserved	
0	1000BASE-T connector loopback	R/W	1: Enabled	0

Note: When bits 5:4 are set to jumbo packet mode, the default maximum packet values are based on 100 ppm driven reference clock to the device. Controlling the ppm offset between the MAC and the PHY as specified in the bit description results in a higher jumbo packet length.

4.2.23 Interrupt Mask

These bits control the device interrupt mask. The following table shows the settings available.

Table 64 • **Interrupt Mask, Address 25 (0x19)**

Bit	Name	Access	Description	Default
15	MDINT interrupt status enable	R/W	Sticky bit. 1: Enabled.	0
14	Speed state change mask	R/W	Sticky bit. 1: Enabled.	0
13	Link state change mask	R/W	Sticky bit. 1: Enabled.	0
12	FDX state change mask	R/W	Sticky bit. 1: Enabled.	0
11	Autonegotiation error mask	R/W	Sticky bit. 1: Enabled.	0
10	Autonegotiation complete mask	R/W	Sticky bit. 1: Enabled.	0
9	Inline powered device (PoE) detect mask	R/W	Sticky bit. 1: Enabled.	0
8	Symbol error interrupt mask	R/W	Sticky bit. 1: Enabled.	0
7	Fast link failure interrupt mask	R/W	Sticky bit. 1: Enabled.	0
6:5	Reserved	R/W		0
4	AMS media changed mask(1)	R/W	Sticky bit. 1: Enabled.	0
3	False carrier interrupt mask	R/W	Sticky bit. 1: Enabled.	0
2	Link speed downshift detect mask	R/W	Sticky bit. 1: Enabled.	0
1	Master/Slave resolution error mask	R/W	Sticky bit. 1: Enabled.	0
0	RX_ER interrupt mask	R/W	Sticky bit. 1: Enabled.	0

1. If hardware interrupts are not used, the mask can still be set and the status polled for changes.

Note: When bit 25.15 is set, the MDINT pin is enabled. When enabled, the state of this pin reflects the state of bit 26.15. Clearing this bit only inhibits the MDINT pin from being asserted. Also, before enabling this bit, read register 26 to clear any previously inactive interrupts pending that will cause bit 25.15 to be set.

4.2.24 Interrupt Status

The status of interrupts already written to the device is available for reading from register 26 in the main registers space. The following table shows the expected readouts.

Table 65 • **Interrupt Status, Address 26 (0x1A)**

Bit	Name	Access	Description	Default
15	Interrupt status	RO	Self-clearing bit. 1: Interrupt pending.	0
14	Speed state change status	RO	Self-clearing bit. 1: Interrupt pending.	0
13	Link state change status	RO	Self-clearing bit. 1: Interrupt pending.	0
12	FDX state change status	RO	Self-clearing bit. 1: Interrupt pending.	0
11	Autonegotiation error status	RO	Self-clearing bit. 1: Interrupt pending.	0
10	Autonegotiation complete status	RO	Self-clearing bit. 1: Interrupt pending.	0
9	Inline powered device detect status	RO	Self-clearing bit. 1: Interrupt pending.	0
8	Symbol error status	RO	Self-clearing bit. 1: Interrupt pending.	0
7	Fast link failure detect status	RO	Self-clearing bit. 1: Interrupt pending.	0
6:5	Reserved	RO		0
4	AMS media changed mask(1)	RO	Self-clearing bit. 1: Interrupt pending.	0
3	False carrier interrupt status	RO	Self-clearing bit. 1: Interrupt pending.	0
2	Link speed downshift detect status	RO	Self-clearing bit. 1: Interrupt pending.	0
1	Master/Slave resolution error status	RO	Self-clearing bit. 1: Interrupt pending.	0
0	RX_ER interrupt status	RO	Self-clearing bit. 1: Interrupt pending.	0

1. If hardware interrupts are not used, the mask can still be set and the status polled for changes.

The following information applies to the interrupt status bits:

- All set bits in this register are cleared after being read (self-clearing). If bit 26.15 is set, the cause of the interrupt can be read by reading bits 26.14:0.
- For bits 26.14 and 26.12, bit 0.12 must be set for this interrupt to assert.
- For bit 26.2, bits 4.8:5 must be set for this interrupt to assert.
- For bit 26.0, this interrupt will not occur when RX_ER is used for carrier-extension decoding of a link partner's data transmission.

4.2.25 Device Auxiliary Control and Status

Register 28 provides control and status information for several device functions not controlled or monitored by other device registers. The following table shows the settings available and the expected readouts.

Table 66 • **Auxiliary Control and Status, Address 28 (0x1C)**

Bit	Name	Access	Description	Default
15	Autonegotiation complete	RO	Duplicate of bit 1.5	0
14	Autonegotiation disabled	RO	Inverted duplicate of bit 0.12	0
13[1]	HP Auto-MDIX crossover indication	RO	1: HP Auto-MDIX crossover performed internally	0

Table 66 • **Auxiliary Control and Status, Address 28 (0x1C) *(continued)***

Bit	Name	Access	Description	Default
12	CD pair swap	RO	1: CD pairs are swapped	0
11	A polarity inversion	RO	1: Polarity swap on pair A	0
10	B polarity inversion	RO	1: Polarity swap on pair B	0
9	C polarity inversion	RO	1: Polarity swap on pair C	0
8	D polarity inversion	RO	1: Polarity swap on pair D	0
7	ActiPHY link status time-out control [1]	R/W	Sticky bit. Bits 7 and 2 are part of the ActiPHY Link Status time-out control. Bit 7 is the MSB. 00: 2.3 seconds 01: 3.3 seconds 10: 4.3 seconds 11: 5.3 seconds	0
6	ActiPHY mode enable	R/W	Sticky bit. 1: Enabled	0
5	FDX status	RO	1: Full-duplex 0: Half-duplex	00
4:3	Speed status	RO	00: Speed is 10BASE-T 01: Speed is 100BASE-TX or 100BASE-FX 10: Speed is 1000BASE-T or 1000BASE-X 11: Reserved	0
2	ActiPHY link status time-out control [0]	R/W	Sticky bit. Bits 7 and 2 are part of the ActiPHY Link Status time-out control. Bit 7 is the MSB. 00: 2.3 seconds 01: 3.3 seconds 10: 4.3 seconds 11: 5.3 seconds	1
1:0	Media mode status	RO	00: No media selected 01: Copper media selected 10: SerDes (Fiber) media selected 11: Reserved	00

1. In 1000BT mode, if Force MDI crossover is performed while link is up, the 1000BT link must be re-negotiated in order for this bit to reflect the actual Auto-MDIX setting.

4.2.26 LED Mode Select

The device LED outputs are controlled using the bits in register 29 of the main register space. The following table shows the information needed to access the functionality of each of the outputs. For more information about LED modes, see Table 30, page 76. For information about enabling the extended LED mode bits in Register 19E1 bits 13 to 12, see Table 31, page 77.

Table 67 • **LED Mode Select, Address 29 (0x1D)**

Bit	Name	Access	Description	Default
15:12	LED3 mode select	R/W	Sticky bit. Select from LED modes 0–15.	1000
11:8	LED2 mode select	R/W	Sticky bit. Select from LED modes 0–15.	0000
7:4	LED1 mode select	R/W	Sticky bit. Select from LED modes 0–15.	0010
3:0	LED0 mode select	R/W	Sticky bit. Select from LED modes 0–15.	0001

4.2.27 LED Behavior

The bits in register 30 control and enable you to read the status of the pulse or blink rate of the device LEDs. The following table shows the settings you can write to the register or read from the register.

Table 68 • **LED Behavior, Address 30 (0x1E)**

Bit	Name	Access	Description	Default
15	Copper and fiber LED combine disable	R/W	Sticky bit 0: Combine enabled (Copper/Fiber on link/linkXXXX/activity LED) 1: Disable combination (link/linkXXXX/activity LED; indicates copper only)	0
14	Activity output select	R/W	Sticky bit 1: Activity LED becomes TX_Activity and fiber activity LED becomes RX_Activity 0: TX and RX activity both displayed on activity LEDs	0
13	Reserved	RO	Reserved	
12	LED pulsing enable	R/W	Sticky bit 0: Normal operation 1: LEDs pulse with a 5 kHz, programmable duty cycle when active	0
11:10	LED blink/pulse-stretch rate	R/W	Sticky bit 00: 2.5 Hz blink rate/400 ms pulse-stretch 01: 5 Hz blink rate/200 ms pulse-stretch 10: 10 Hz blink rate/100 ms pulse-stretch 11: 20 Hz blink rate/50 ms pulse-stretch The blink rate selection for PHY0 globally sets the rate used for all LED pins on all PHY ports	01
9	Reserved	RO	Reserved	
8	LED3 pulse-stretch/blink select	R/W	Sticky bit 1: Pulse-stretch 0: Blink	0
7	LED2 pulse-stretch/blink select	R/W	Sticky bit 1: Pulse-stretch 0: Blink	0
6	LED1 pulse-stretch/blink select	R/W	Sticky bit 1: Pulse-stretch 0: Blink	0
5	LED0 pulse-stretch/blink select	R/W	Sticky bit 1: Pulse-stretch 0: Blink	0
4	Reserved	RO	Reserved	
3	LED3 combine feature disable	R/W	Sticky bit 0: Combine enabled (link/activity, duplex/collision) 1: Disable combination (link only, duplex only)	0
2	LED2 combine feature disable	R/W	Sticky bit 0: Combine enabled (link/activity, duplex/collision) 1: Disable combination (link only, duplex only)	0

Table 68 • **LED Behavior, Address 30 (0x1E) *(continued)***

Bit	Name	Access	Description	Default
1	LED1 combine feature disable	R/W	Sticky bit 0: Combine enabled (link/activity, duplex/collision) 1: Disable combination (link only, duplex only)	0
0	LED0 combine feature disable	R/W	Sticky bit 0: Combine enabled (link/activity, duplex/collision) 1: Disable combination (link only, duplex only)	0

Note: Bits 30.11:10 are active only in port 0 and affect the behavior of LEDs for all the ports.

4.2.28 Extended Page Access

To provide functionality beyond the IEEE 802.3-specified registers and main device registers, the VSC8574-01 includes an extended set of registers that provide an additional 15 register spaces.

The register at address 31 controls the access to the extended registers for the VSC8574-01. Accessing the GPIO page register space is similar to accessing the extended page registers. The following table shows the settings available.

Table 69 • **Extended/GPIO Register Page Access, Address 31 (0x1F)**

Bit	Name	Access	Description	Default
15:0	Extended/GPIO page register access	R/W	0x0000: Register 16–30 accesses main register space. Writing 0x0000 to register 31 restores the main register access. 0x0001: Registers 16–30 access extended register space 1 0x0002: Registers 16–30 access extended register space 2 0x0003: Registers 16–30 access extended register space 3 0x0010: Registers 0–30 access GPIO register space 0x1588: Registers 16-18 1588 registers	0x0000

4.3 Extended Page 1 Registers

To access the extended page 1 registers (16E1–30E1), enable extended register access by writing 0x0001 to register 31. Writing 0x0000 to register 31 restores the main register access.

When extended page 1 register access is enabled, reads and writes to registers 16–30 affect the extended registers 16E1–30E1 instead of those same registers in the IEEE-specified register space. Registers 0–15 are not affected by the state of the extended page register access.

Table 70 • **Extended Registers Page 1 Space**

Address	Name
16E1	SerDes Media Control
17E1	Reserved
18E1	Cu Media CRC good counter
19E1	Extended mode and SIGDET control
20E1	Extended PHY control 3 (ActiPHY)

Table 70 • **Extended Registers Page 1 Space *(continued)***

Address	Name
21E1–22E1	Reserved
23E1	Extended PHY control 4 (PoE and CRC error counter)
27E1–28E1	Reserved
29E1	Ethernet packet generator (EPG) 1
30E1	EPG 2

4.3.1 SerDes Media Control

Register 16E1 controls some functions of the SerDes media interface on ports 0–3. These settings are only valid for those ports. The following table shows the setting available in this register.

Table 71 • **SerDes Media Control, Address 16E1 (0x10)**

Bit	Name	Access	Description	Default
15:14	Transmit remote fault	R/W	Remote fault indication sent to link partner (LP)	00
13:12	Link partner (LP) remote fault	RO	Remote fault bits sent by LP during autonegotiation	00
11:10	Reserved	RO	Reserved	
9	Allow 1000BASE-X link-up	R/W	Sticky bit. 1: Allow 1000BASE-X fiber media link-up capability 0: Suppress 1000BASE-X fiber media link-up capability	1
8	Allow 100BASE-FX link-up	R/W	Sticky bit. 1: Allow 100BASE-FX fiber media link-up capability 0: Suppress 100BASE-FX fiber media link-up capability	1
7	Reserved	RO	Reserved	
6	Far end fault detected in 100BASE-FX	RO	Self-clearing bit. 1: Far end fault in 100BASE-FX detected	0
5:0	Reserved	RO	Reserved	

4.3.2 Cu Media CRC Good Counter

Register 18E1 makes it possible to read the contents of the CRC good counter for packets that are received on the Cu media interface; the number of CRC routines that have executed successfully. The following table shows the expected readouts.

Table 72 • **Cu Media CRC Good Counter, Address 18E1 (0x12)**

Bit	Name	Access	Description	Default
15	Packet since last read	RO	Self-clearing bit. 1: Packet received since last read.	0
14	Reserved	RO	Reserved.	

Table 72 • **Cu Media CRC Good Counter, Address 18E1 (0x12) *(continued)***

Bit	Name	Access	Description	Default
13:0	Cu Media CRC good counter contents	RO	Self-clearing bit. Counter containing the number of packets with valid CRCs modulo 10,000; this counter does not saturate and will roll over to zero on the next good packet received after 9,999.	0x000

4.3.3 Extended Mode Control

Register 19E1 controls the extended LED and other chip modes. The following table shows the settings available.

Table 73 • **Extended Mode Control, Address 19E1 (0x13)**

Bit	Name	Access	Description	Default
15	LED3 Extended Mode	R/W	1: See Extended LED Modes, page 77	0
14	LED2 Extended Mode	R/W	1: See Extended LED Modes, page 77	0
13	LED1 Extended Mode	R/W	1: See Extended LED Modes, page 77	0
12	LED0 Extended Mode	R/W	1: See Extended LED Modes, page 77	0
11	LED Reset Blink Suppress	R/W	1: Blink LEDs after COMA_MODE is de-asserted 0: Suppress LED blink after COMA_MODE is de-asserted	0
10:5	Reserved	RO	Reserved	0
4	Fast link failure	R/W	Enable fast link failure pin. This must be done from PHY0 only. 1: Enabled 0: Disabled (GPIO9 pin becomes general purpose I/O)	0
3:2	Force MDI crossover	R/W	00: Normal HP Auto-MDIX operation 01: Reserved 10: Copper media forced to MDI 11: Copper media forced MDI-X	00
1	Reserved	RO	Reserved	
0	GPIO[3:0]/SIGDET[3:0] pin polarity	R/W	1: Active low 0: Active high	0

4.3.4 ActiPHY Control

Register 20E1 controls the device ActiPHY sleep timer, its wake-up timer, and its link speed downshifting feature. The following table shows the settings available.

Table 74 • **Extended PHY Control 3, Address 20E1 (0x14)**

Bit	Name	Access	Description	Default
15	Disable carrier extension	R/W	1: Disable carrier extension in 1000BASE-T copper links	1

Table 74 • **Extended PHY Control 3, Address 20E1 (0x14)** ***(continued)***

Bit	Name	Access	Description	Default
14:13	ActiPHY sleep timer	R/W	Sticky bit. 00: 1 second 01: 2 seconds 10: 3 seconds 11: 4 seconds	01
12:11	ActiPHY wake-up timer	R/W	Sticky bit. 00: 160 ms 01: 400 ms 10: 800 ms 11: 2 seconds	00
10	Reserved	RO	Reserved	
9	PHY address reversal	R/W	Reverse PHY address Enabling causes physical PHY 0 to have address of 3, PHY 1 address of 2, PHY 2 address of 1, and PHY 3 address of 0. Changing this bit to 1 should initially be done from PHY 0 and changing to 0 from PHY3 1: Enabled 0: Disabled	0
8	Reserved	RO	Valid only on PHY0	
7:6	Media mode status	RO	00: No media selected 01: Copper media selected 10: SerDes media selected 11: Reserved	00
5	Enable 10BASE-T no preamble mode	R/W	Sticky bit. 1: 10BASE-T will assert RX_DV indication when data is presented to the receiver even without a preamble preceding it	0
4	Enable link speed autodownshift feature	R/W	Sticky bit. 1: Enable auto link speed downshift from 1000BASE-T	0
3:2	Link speed auto downshift control	R/W	Sticky bits. 00: Downshift after 2 failed 1000BASE-T autonegotiation attempts 01: Downshift after 3 failed 1000BASE-T autonegotiation attempts 10: Downshift after 4 failed 1000BASE-T autonegotiation attempts 11: Downshift after 5 failed 1000BASE-T autonegotiation attempts	01
1	Link speed auto downshift status	RO	0: No downshift 1: Downshift is required or has occurred	0
0	Reserved	RO	Reserved	

4.3.5 PoE and Miscellaneous Functionality

The register at address 23E1 controls various aspects of inline powering and the CRC error counter in the VSC8574-01.

Table 75 • **Extended PHY Control 4, Address 23E1 (0x17)**

Bit	Name	Access	Description	Default
15:11	PHY address	RO	PHY address; latched on reset	
10	Inline powered device detection	R/W	Sticky bit. 1: Enabled	0
9:8	Inline powered device detection status	RO	Only valid when bit 10 is set. 00: Searching for devices 01: Device found; requires inline power 10: Device found; does not require inline power 11: Reserved	00
7:0	Cu Media CRC error counter	RO	Self-clearing bit	

RC error counter for packets received on the Cu media interface. The value saturates at 0xFF and subsequently clears when read and restarts count.0x00

4.3.6 Ethernet Packet Generator Control 1

The EPG control register provides access to and control of various aspects of the EPG testing feature. There are two separate EPG control registers. The following table shows the settings available in the first register.

Table 76 • **EPG Control Register 1, Address 29E1 (0x1D)**

Bit	Name	Access	Description	Default
15	EPG enable	R/W	1: Enable EPG	0
14	EPG run or stop	R/W	1: Run EPG	0
13	Transmission duration	R/W	1: Continuous (sends in 10,000-packet increments) 0: Send 30,000,000 packets and stop	0
12:11	Packet length	R/W	00: 125 bytes 01: 64 bytes 10: 1518 bytes 11: 10,000 bytes (jumbo packet)	0
10	Interpacket gap	R/W	1: 8,192 ns 0: 96 ns	0
9:6	Destination address	R/W	Lowest nibble of the 6-byte destination address	0001
5:2	Source address	R/W	Lowest nibble of the 6-byte destination address	0000
1	Payload type	R/W	1: Randomly generated payload pattern 0: Fixed based on payload pattern	0
0	Bad frame check sequence (FCS) generation	R/W	1: Generate packets with bad FCS 0: Generate packets with good FCS	0

The following information applies to the EPG control number 1:

- Do not run the EPG when the VSC8574-01 is connected to a live network.
- bit 29E1.13 (continuous EPG mode control): When enabled, this mode causes the device to send continuous packets. When disabled, the device continues to send packets only until it reaches the next 10,000-packet increment mark. It then ceases to send packets.
- The 6-byte destination address in bits 9:6 is assigned one of 16 addresses in the range of 0xFF FF FF FF FF F0 through 0xFF FF FF FF FF FF.
- The 6-byte source address in bits 5:2 is assigned one of 16 addresses in the range of 0xFF FF FF FF FF F0 through 0xFF FF FF FF FF FF.
- If any of bits 13:0 are changed while the EPG is running (bit 14 is set to 1), bit 14 must be cleared and then set back to 1 for the change to take effect and to restart the EPG.

4.3.7 Ethernet Packet Generator Control 2

Register 30E1 consists of the second set of bits that provide access to and control over the various aspects of the EPG testing feature. The following table shows the settings available.

Table 77 • **EPG Control Register 2, Address 30E1 (0x1E)**

Bit	Name	Access	Description	Default
15:0	EPG packet payload	R/W	Data pattern repeated in the payload of packets generated by the EPG	0x00

Note: If any of bits 15:0 in this register are changed while the EPG is running (bit 14 of register 29E1 is set to 1), that bit (29E1.14) must first be cleared and then set back to 1 for the change to take effect and to restart the EPG.

4.4 Extended Page 2 Registers

To access the extended page 2 registers (16E2–30E2), enable extended register access by writing 0x0002 to register 31. For more information, see Table 69, page 111.

When extended page 2 register access is enabled, reads and writes to registers 16–30 affect the extended registers 16E2–30E2 instead of those same registers in the IEEE-specified register space. Registers 0–15 are not affected by the state of the extended page register access.

Writing 0x0000 to register 31 restores the main register access.

The following table lists the addresses and register names in the extended register page 2 space. These registers are accessible only when the device register 31 is set to 0x0002.

Table 78 • **Extended Registers Page 2 Space**

Address	Name
16E2	Cu PMD Transmit Control
17E2	EEE Control
18E2-29E2	Reserved
30E2	Ring Resiliency Control

4.4.1 Cu PMD Transmit Control

The register at address 16E2 consists of the bits that provide control over the amplitude settings for the transmit side Cu PMD interface. These bits provide the ability to make small adjustments in the signal amplitude to compensate for minor variations in the magnetics from different vendors. Extreme caution must be exercised when changing these settings from the default values as they have a direct impact on

the signal quality. Changing these settings also affects the linearity and harmonic distortion of the transmitted signals. For help with changing these values, contact your Microsemi representative.

Table 79 • **Cu PMD Transmit Control, Address 16E2 (0x10)**

Bit	Name	Access	Description	Default
15:12	1000BASE-T signal amplitude trim(1)	R/W	1000BASE-T signal amplitude 1111: -1.7% 1110: -2.6% 1101: -3.5% 1100: -4.4% 1011: -5.3% 1010: -7% 1001: -8.8% 1000: -10.6% 0111: 5.5% 0110: 4.6% 0101: 3.7% 0100: 2.8% 0011: 1.9% 0010: 1% 0001: 0.1% 0000: -0.8%	0000
11:8	100BASE-TX signal amplitude trim(2)	R/W	100BASE-TX signal amplitude 1111: -1.7% 1110: -2.6% 1101: -3.5% 1100: -4.4% 1011: -5.3% 1010: -7% 1001: -8.8% 1000: -10.6% 0111 5.5% 0110: 4.6% 0101: 3.7% 0100: 2.8% 0011: 1.9% 0010: 1% 0001: 0.1% 0000: -0.8%	0010
7:4	10BASE-T signal amplitude trim(3)	R/W	10BASE-T signal amplitude 1111: -7% 1110: -7.9% 1101: -8.8% 1100: -9.7% 1011: -10.6% 1010: -11.5% 1001: -12.4% 1000: -13.3% 0111: 0% 0110: -0.7% 0101: -1.6% 0100: -2.5% 0011: -3.4% 0010: -4.3% 0001: -5.2% 0000: -6.1%	1011

Table 79 • **Cu PMD Transmit Control, Address 16E2 (0x10) *(continued)***

Bit	Name	Access	Description	Default
3:0	10BASE-Te signal amplitude trim	R/W	10BASE-Te signal amplitude 1111: -30.45% 1110: -31.1% 1101: -31.75% 1100: -32.4% 1011: -33.05% 1010: -33.7% 1001: -34.35% 1000: -35% 0111: -25.25% 0110: -25.9% 0101: -26.55% 0100: -27.2% 0011: -27.85% 0010: -28.5% 0001: -29.15% 0000: -29.8%	1110

1. Changes to 1000BASE-T amplitude may result in unpredictable side effects.
2. Adjust 100BASE-TX to specific magnetics.
3. Amplitude is limited by V_{CC} (2.5 V).

4.4.2 EEE Control

The register at address 17E2 consists of the bits that provide additional control over the chip behavior in energy efficient Ethernet (IEEE 802.3az-2010) mode.

Table 80 • **EEE Control, Address 17E2 (0x11)**

Bit	Name	Access	Description	Default
15	Enable 10BASE-Te	R/W	Sticky bit. Enable energy efficient (IEEE 802.3az-2010) 10BASE-Te operating mode.	0
14	Enable LED in fiber unidirectional mode	R/W	Sticky bit. 1: Enable LED functions in fiber unidirectional mode.	0
13:10	Invert LED polarity	R/W	Sticky bits. Invert polarity of LED[3:0]_[3:0] signals. Default is to drive an active low signal on the LED pins. This also applies to enhanced serial LED mode. For more information, see Enhanced Serial LED Mode, page 79.	0000
9:6	Reserved	RO	Reserved.	
5	Enable 1000BASE-T force mode	R/W	Sticky bit. 1: Enable 1000BASE-T force mode to allow PHY to link-up in 1000BASE-T mode without forcing master/slave when register 0, bits 6 and 13 are set to 2'b10.	0
4[1]	Force transmit LPI	R/W	Sticky bit. 1: Enable the EPG to transmit LPI on the MDI, ignore data from the MAC interface. 0: Transmit idles being received from the MAC.	0

Table 80 • **EEE Control, Address 17E2 (0x11) *(continued)***

Bit	Name	Access	Description	Default
3	Inhibit 100BASE-TX transmit EEE LPI	R/W	Sticky bit. 1: Disable transmission of EEE LPI on transmit path MDI in 100BASE-TX mode when receiving LPI from MAC.	0
2	Inhibit 100BASE-TX receive EEE LPI	R/W	Sticky bit. 1: Disable transmission of EEE LPI on receive path MAC interface in 100BASE-TX mode when receiving LPI from the MDI.	0
1	Inhibit 1000BASE-T transmit EEE LPI	R/W	Sticky bit. 1: Disable transmission of EEE LPI on transmit path MDI in 1000BASE-T mode when receiving LPI from MAC.	0
0	Inhibit 1000BASE-T receive EEE LPI	R/W	Sticky bit. 1: Disable transmission of EEE LPI on receive path MAC interface in 1000BASE-T mode when receiving LPI from the MDI.	0

1. 17E2 bits 4:0 are for debugging purposes only, not for operational use.

4.4.3 Ring Resiliency Control

The following table shows the register settings for the ring resiliency controls at address 30E2.

Table 81 • **Ring Resiliency, Address 30E2**

Bit	Name	Access	Description	Default
15	Ring resiliency startup enable (master TR enable)	R/W	Sticky	0
14	Advertise ring resiliency	R/W	Sticky	0
13	LP ring resiliency advertisement	RO		0
12	Force ring resiliency enable (override autoneg)	R/W	Sticky	0
11:6	Reserved	RO	Reserved	000000
5:4	Ring resiliency status	RO	Ring resiliency status (from r1000 DSP SM) 00: Timing slave(1) 10: Timing slave becoming master 11: Timing master(1) 01: Timing master becoming slave	00
3:1	Reserved	RO	Reserved	000
0	Start switchover (only when not in progress)	RWSC		0

1. Reflects autoneg master/slave at initial link-up

4.5 Extended Page 3 Registers

To access the extended page 3 registers (16E3–30E3), enable extended register access by writing 0x0003 to register 31. For more information, see Table 69, page 111.

When extended page 3 register access is enabled, reads and writes to registers 16–30 affect the extended registers 16E3–30E3 instead of those same registers in the IEEE-specified register space. Registers 0–15 are not affected by the state of the extended page register access.

Writing 0x0000 to register 31 restores the main register access.

The following table lists the addresses and register names in the extended register page 3 space. These registers are accessible only when the device register 31 is set to 0x0003.

Table 82 • **Extended Registers Page 3 Space**

Address	Name
16E3	MAC SerDes PCS Control
17E3	MAC SerDes PCS Status
18E3	MAC SerDes Clause 37 Advertised Ability
19E3	MAC SerDes Clause 37 Link Partner Ability
20E3	MAC SerDes Status
21E3	Media SerDes Transmit Good Packet Counter
22E3	Media SerDes Transmit CRC Error Counter
23E3	Media SerDes PCS Control
24E3	Media SerDes PCS Status
25E3	Media SerDes Clause 37 Advertised Ability
26E3	Media SerDes Clause 37 Link Partner Ability
27E3	Media SerDes status
28E3	Fiber Media CRC Good Counter
29E3	Fiber Media CRC Error Counter
30E3	Reserved

4.5.1 MAC SerDes PCS Control

The register at address 16E3 consists of the bits that provide access to and control over MAC SerDes PCS block. The following table shows the settings available.

Table 83 • **MAC SerDes PCS Control, Address 16E3 (0x10)**

Bit	Name	Access	Description	Default
15	MAC interface disable	R/W	Sticky bit. 1: 1000BASE-X MAC interface disable when media link down.	0
14	MAC interface restart	R/W	Sticky bit. 1: 1000BASE-X MAC interface restart on media link change.	0
13	MAC interface PD enable	R/W	Sticky bit. 1: MAC interface autonegotiation parallel detect enable.	0

Table 83 • **MAC SerDes PCS Control, Address 16E3 (0x10) *(continued)***

Bit	Name	Access	Description	Default
12	MAC interface autonegotiation restart	R/W	Self-clearing bit. 1: Restart MAC interface autonegotiation.	0
11	Force advertised ability	R/W	1: Force 16-bit advertised ability from register 18E3.	0
10:8	SGMII preamble control	R/W	000: No effect on the start of packet. 001: If both the first two nibbles of the 10/100 packet are not 0x5, a byte of 0x55 must be prefixed to the output, otherwise there will be no effect on the start of packet. 010: If both the first two nibbles of the 10/100 packet are not 0x5, a byte of 0x55 must be prefixed to the output. An additional byte of 0x55 must be prefixed to the output if the next two nibbles are also not 0x5. 011–111: Reserved.	001
7	MAC SerDes autonegotiation enable	R/W	1: MAC SerDes ANEG enable.	0
6	SerDes polarity at input of MAC	R/W	1: Invert polarity of signal received at input of MAC.	0
5	SerDes polarity at output of MAC	R/W	1: Invert polarity of signal at output of MAC.	
4	Fast link status enable	R/W	1: Use fast link fail indication as link status indication to MAC SerDes. 0: Use normal link status indication to MAC SerDes.	0
3	Reserved	R/W	Reserved.	0
2:0	Reserved	RO	Reserved.	

4.5.2 MAC SerDes PCS Status

The register at address 17E3 consists of the bits that provide status from the MAC SerDes PCS block. The following table shows the settings available.

Table 84 • **MAC SerDes PCS Status, Address 17E3 (0x11)**

Bit	Name	Access	Description
15:13	Reserved	RO	Reserved
12	SGMII alignment error	RO	1: SGMII alignment error occurred
11	MAC interface LP autonegotiation restart	RO	1: MAC interface link partner autonegotiation restart request occurred
10	Reserved	RO	Reserved
9:8	MAC remote fault	RO	01, 10, and 11: Remote fault detected from MAC 00: No remote fault detected from MAC
7	Asymmetric pause advertisement	RO	1: Asymmetric pause advertised by MAC
6	Symmetric pause advertisement	RO	1: Symmetric pause advertised by MAC
5	Full duplex advertisement	RO	1: Full duplex advertised by MAC
4	Half duplex advertisement	RO	1: Half duplex advertised by MAC

Table 84 • **MAC SerDes PCS Status, Address 17E3 (0x11) *(continued)***

Bit	Name	Access	Description
3	MAC interface LP autonegotiation capable	RO	1: MAC interface link partner autonegotiation capable
2	MAC interface link status	RO	1: MAC interface link status connected
1	MAC interface autonegotiation complete	RO	1: MAC interface autonegotiation complete
0	MAC comma detect	RO	1: Comma currently detected 0: comma currently not detected

4.5.3 MAC SerDes Clause 37 Advertised Ability

The register at address 18E3 consists of the bits that provide access to and control over MAC SerDes Clause 37 advertised ability. The following table shows the settings available.

Table 85 • **MAC SerDes Cl37 Advertised Ability, Address 18E3 (0x12)**

Bit	Name	Access	Description	Default
15:0	MAC SerDes advertised ability	R/W	Current configuration code word being advertised (this register is read/write if 16E3.11 = 1)	0x0000

4.5.4 MAC SerDes Clause 37 Link Partner Ability

The register at address 19E3 consists of the bits that provide status of the MAC SerDes link partner's Clause 37 advertised ability. The following table shows the settings available.

Table 86 • **MAC SerDes Cl37 LP Ability, Address 19E3 (0x13)**

Bit	Name	Access	Description
15:0	MAC SerDes LP ability	RO	Last configuration code word received from link partner

4.5.5 MAC SerDes Status

The register at address 20E3 consists of the bits that provide access to MAC SerDes status. The following table shows the settings available.

Table 87 • **MAC SerDes Status, Address 20E3 (0x14)**

Bit	Name	Access	Description
15	Reserved	RO	Reserved
14	MAC comma detect	RO	Super-sticky bit. Cleared upon SW reset. 1: Comma detected 0: Comma not detected
13	QSGMII sync status	RO	
12:0	Reserved	RO	Reserved

4.5.6 Media SerDes Transmit Good Packet Counter

The register at address 21E3 consists of the bits that provide status of the media SerDes transmit good packet counter. The following table shows the settings available.

Table 88 • **Media SerDes Tx Good Packet Counter, Address 21E3 (0x15)**

Bit	Name	Access	Description
15	Tx good packet counter active	RO	1: Transmit good packet counter active
14	Reserved	RO	Reserved
13:0	Tx good packet count	RO	Transmit good packet count modulo 10000

4.5.7 Media SerDes Transmit CRC Error Counter

The register at address 22E3 consists of the bits that provide status of the media SerDes transmit packet count that had a CRC error. The following table shows the settings available.

Table 89 • **Media SerDes Tx CRC Error Counter, Address 22E3 (0x16)**

Bit	Name	Access	Description
15:8	Reserved	RO	Reserved
7:0	Tx CRC packet count	RO	Transmit CRC packet count (saturates at 255)

4.5.8 Media SerDes PCS Control

The register at address 23E3 consists of the bits that provide access to and control over Media SerDes PCS control. The following table shows the settings available.

Table 90 • **Media SerDes PCS Control, Address 23E3 (0x17)**

Bit	Name	Access	Description	Default
15:14	Reserved	RO	Reserved	
13	Media interface autonegotiation parallel-detection	R/W	Sticky bit. 1: SerDes media autonegotiation parallel detect enabled	0
12	Reserved	RO	Reserved	
11	Force advertised ability	R/W	1: Force 16-bit advertised ability from register 25E3.15:0	0
10:7	Reserved	RO	Reserved	
6	Polarity reversal input		Media SerDes polarity reversal input 0: No polarity reversal (default) 1: Polarity reversed	0
5	Polarity reversal output		Media SerDes polarity reversal output 0: No polarity reversal (default) 1: Polarity reversed	0
4:0	Reserved	RO	Reserved	

4.5.9 Media SerDes PCS Status

The register at address 24E3 consists of the bits that provide status of the Media SerDes PCS block. The following table shows the settings available.

Table 91 • **Media SerDes PCS Status, Address 24E3 (0x18)**

Bit	Name	Access	Description
15:14	Reserved	RO	Reserved
13	SerDes protocol transfer	RO	100 Mb or 100BASE-FX link status
12	SerDes protocol transfer	RO	10 Mb link status
11	Media interface link partner autonegotiation restart	RO	1: Media interface link partner autonegotiation restart request occurred
10	Reserved	RO	Reserved
9:8	Remote fault detected	RO	01, 10, 11: Remote fault detected from link partner
7	Link partner asymmetric pause	RO	1: Asymmetric pause advertised by link partner
6	Link partner symmetric pause	RO	1: Symmetric pause advertised by link partner
5	Link partner full duplex advertisement	RO	1: Full duplex advertised by link partner
4	Link partner half duplex advertisement	RO	1: Half duplex advertised by link partner
3	Link partner autonegotiation capable	RO	1: Media interface link partner autonegotiation capable
2	Media interface link status	RO	1: Media interface link status
1	Media interface autonegotiation complete	RO	1: Media interface autonegotiation complete
0	Media interface signal detect	RO	1: Media interface signal detect

4.5.10 Media SerDes Clause 37 Advertised Ability

The register at address 25E3 consists of the bits that provide access to and control over Media SerDes Clause 37 advertised ability. The following table shows the settings available.

Table 92 • **Media SerDes Cl37 Advertised Ability, Address 25E3 (0x19)**

Bit	Name	Access	Description	Default
15:0	Media SerDes advertised ability	R/W	Current configuration code word being advertised. This register is read/write when 23E3.11 = 1.	0x0000

4.5.11 Media SerDes Clause 37 Link Partner Ability

The register at address 26E3 consists of the bits that provide status of the media SerDes link partner's Clause 37 advertised ability. The following table shows the settings available.

Table 93 • **MAC SerDes Cl37 LP Ability, Address 26E3 (0x1A)**

Bit	Name	Access	Description
15:0	Media SerDes LP ability	RO	Last configuration code word received from link partner

4.5.12 Media SerDes Status

The register at address 27E3 consists of the bits that provide access to Media SerDes status. The following table shows the settings available.

Table 94 • **Media SerDes Status, Address 27E3 (0x1B)**

Bit	Name	Access	Description
15	K28.5 comma realignment	RO	Self-clearing bit. 1: K28.5 comma re-alignment has occurred
14	Signal detect	RO	Self-clearing bit. Sticky bit. 1: SerDes media signal detect
13:0	Reserved	RO	Reserved

4.5.13 Fiber Media CRC Good Counter

Register 28E3 makes it possible to read the contents of the CRC good counter for packets that are received on the Fiber media interface; the number of CRC routines that have executed successfully. The following table shows the expected readouts.

Table 95 • **Fiber Media CRC Good Counter, Address 28E3 (0x1C)**

Bit	Name	Access	Description	Default
15	Packet since last read	RO	Self-clearing bit. 1: Packet received since last read.	0
14	Reserved	RO	Reserved.	
13:0	Fiber media CRC good counter contents	RO	Self-clearing bit. Counter containing the number of packets with valid CRCs. This counter does not saturate and will roll over.	0x000

4.5.14 Fiber Media CRC Error Counter

Register 29E3 makes it possible to read the contents of the CRC error counter for packets that are received on the Fiber media interface. The following table shows the expected readouts.

Table 96 • **Fiber Media CRC Error Counter, Address 29E3 (0x1D)**

Bit	Name	Access	Description	Default
15:8	Reserved	RO	Reserved.	
7:0	Fiber Media CRC error counter	RO	Self-clearing bit. CRC error counter for packets received on the Fiber media interface. The value saturates at 0xFF and subsequently clears when read and restarts count.	0x00

4.6 General Purpose Registers

Accessing the general purpose register space is similar to accessing the extended page registers. Set register 31 to 0x0010. This sets all 32 registers to the general purpose register space.

To restore main register page access, write 0x0000 to register 31.

The following table lists the addresses and register names in the general purpose register page space. These registers are accessible only when the device register 31 is set to 0x0010. All general purpose

register bits are super-sticky. This register space is global in nature to all four PHY's in the VSC8574-01 device.

Table 97 • **General Purpose Registers Page Space**

Address	Name
0G–12G	Reserved
13G	LED/SIGDET/GPIO Control
14G	GPIO Control 2
15G	GPIO Input
16G	GPIO Output
17G	GPIO Output Enable
18G	Micro Command
19G	MAC Mode and Fast Link Configuration
20G	Two-Wire Serial MUX Control 1
21G	Two-Wire Serial MUX Control 2
22G	Two-Wire Serial MUX Data Read/Write
23G	Recovered Clock 0 Control
24G	Recovered Clock 1 Control
25G	Enhanced LED Control
26G	Reserved
27G	Reserved
28G	Reserved
29G	Global Interrupt Status
30G	Reserved

4.6.1 Reserved General Purpose Address Space

The bits in registers 0G to 12G and 30G of the general purpose register space are reserved.

4.6.2 SIGDET/GPIO Control

The SIGDET control bits configure the GPIO[3:0]/SIGDET[3:0] pins to function either as signal detect pins for each fiber media port, or as GPIOs. The following table shows the values that can be written.

Table 98 • **SIGDET/GPIO Control, Address 13G (0x0D)**

Bit	Name	Access	Description	Default
15:14	GPIO7/I2C_SCL_3	R/W	00: SCL for PHY3 01: Reserved 10: Reserved 11: Controlled by MII registers 15G to 17G	00
13:12	GPIO6/I2C_SCL_2	R/W	00: SCL for PHY2 01: Reserved 10: Reserved 11: Controlled by MII registers 15G to 17G	00

Table 98 • **SIGDET/GPIO Control, Address 13G (0x0D) *(continued)***

Bit	Name	Access	Description	Default
11:10	GPIO5/I2C_SCL_1	R/W	00: SCL for PHY1 01: Reserved 10: Reserved 11: Controlled by MII registers 15G to 17G	00
9:8	GPIO4/I2C_SCL_0	R/W	00: SCL for PHY0 01: Reserved 10: Reserved 11: Controlled by MII registers 15G to 17G	00
7:6	GPIO3/SIGDET3 control	R/W	00: SIGDET operation 01: Reserved 10: Reserved 11: Controlled by MII registers 15G to 17G	00
5:4	GPIO2/SIGDET2 control	R/W	00: SIGDET operation 01: Reserved 10: Reserved 11: Controlled by MII registers 15G to 17G	00
3:2	GPIO1/SIGDET1 control	R/W	00: SIGDET operation 01: Reserved 10: Reserved 11: Controlled by MII registers 15G to 17G	00
1:0	GPIO0/SIGDET0 control	R/W	00: SIGDET operation 01: Reserved 10: Reserved 11: Controlled by MII registers 15G to 17G	00

4.6.3 GPIO Control 2

The GPIO control 2 register configures the functionality of the COMA_MODE and 1588 control input pins, and provides control for possible GPIO pin options.

Table 99 • **GPIO Control 2, Address 14G (0x0E)**

Bit	Name	Access	Description	Default
15:14	GPIO12/1588_SPI_CS and GPIO13/1588_SPI_DO	R/W	GPIO12/1588_SPI_CS and GPIO13/1588_SPI_DO control. 00: 1588_SPI_CS/1588_SPI_DO operation. 01: Reserved. 10: Reserved. 11: GPIO12/GPIO13 operation. Controlled by MII registers 15G to 17G.	
13	COMA_MODE output enable (active low)	R/W	1: COMA_MODE pin is an input. 0: COMA_MODE pin is an output.	1
12	COMA_MODE output data	R/W	Value to output on the COMA_MODE pin when it is configured as an output.	0
11	COMA_MODE input data	RO	Data read from the COMA_MODE pin.	

Table 99 • **GPIO Control 2, Address 14G (0x0E) *(continued)***

Bit	Name	Access	Description	Default
10	Tri-state enable for two-wire serial bus	R/W	1: Tri-states two-wire serial bus output signals instead of driving them high. This allows those signals to be pulled above VDD25 using an external pull-up resistor. 0: Drive two-wire serial bus output signals to high and low values as appropriate.	1
9	Tri-state enable for LEDs	R/W	1: Tri-state LED output signals instead of driving them high. This allows the signals to be pulled above V_{DDIO} using an external pull-up resistor. 0: Drive LED bus output signals to high and low values.	1
8	Reserved	RO	Reserved	0
7:6	GPIO11/1588_PPS_0	R/W	GPIO11/1588_PPS_0 control. 00: 1588_PPS_0 operation 01: Reserved 10: Reserved 11: Controlled by MII registers 15G to 17G	
5:4	GPIO10/1588_LOAD_SAVE	R/W	GPIO10/1588_LOAD_SAVE control. 00: 1588_LOAD_SAVE operation 01: Reserved 10: Reserved 11: Controlled by MII registers 15G to 17G	
3:2	GPIO9/FASTLINK_FAIL	R/W	GPIO9/FASTLINK_FAIL control. 00: FASTLINK_FAIL operation 01: Reserved 10: Reserved 11: Controlled by MII registers 15G to 17G	
1:0	GPIO8/I2C_SDA	R/W	GPIO8/I2C_SDA control. 00: I2C_SDA operation 01: Reserved 10: Reserved 11: Controlled by MII registers 15G to 17G	

4.6.4 GPIO Input

The input register contains information about the input to the device GPIO pins. Read from this register to access the data on the device GPIO pins. The following table shows the readout you can expect.

Table 100 • **GPIO Input, Address 15G (0x0F)**

Bit	Name	Access	Description	Default
15:14	Reserved	RO	Reserved	
13	GPIO13/1588_SPI_DO	R/W	GPIO13/1588_SPI_DO input	0
12	GPIO12/1588_SPI_CS	R/W	GPIO12/1588_SPI_CS input	0
11	GPIO11/1588_PPS_0	R/W	GPIO11/1588_PPS_0 input	0
10	GPIO10/1588_LOAD_SAVE	R/W	GPIO10/1588_LOAD_SAVE input	0
9	GPIO9/FASTLINK_FAIL	R/W	GPIO9/FASTLINK_FAIL input	0
8	GPIO8/I2C_SDA	R/W	GPIO8/I2C_SDA input	0

Table 100 • **GPIO Input, Address 15G (0x0F) *(continued)***

Bit	Name	Access	Description	Default
7	GPIO7/I2C_SCL_3	R/W	GPIO7/I2C_SCL_3 input	0
6	GPIO6/I2C_SCL_2	R/W	GPIO6/I2C_SCL_2 input	0
5	GPIO5/I2C_SCL_1	R/W	GPIO5/I2C_SCL_1 input	0
4	GPIO4/I2C_SCL_0	R/W	GPIO4/I2C_SCL_0 input	0
3	GPIO3/SIGDET3	R/W	GPIO3/SIGDET3 input	0
2	GPIO2/SIGDET2	R/W	GPIO2/SIGDET2 input	0
1	GPIO1/SIGDET1	R/W	GPIO1/SIGDET1 input	0
0	GPIO0/SIGDET0	R/W	GPIO0/SIGDET0 input	0

4.6.5 GPIO Output

The output register allows you to access and control the output from the device GPIO pins. The following table shows the values you can write.

Table 101 • **GPIO Output, Address 16G (0x10)**

Bit	Name	Access	Description	Default
15:14	Reserved	RO	Reserved	
13	GPIO13/1588_SPI_DO	R/W	GPIO13/1588_SPI_DO output	0
12	GPIO12/1588_SPI_CS	R/W	GPIO12/1588_SPI_CS output	0
11	GPIO11/1588_PPS_0	R/W	GPIO11/1588_PPS_0 output	0
10	GPIO10/1588_LOAD_SAVE	R/W	GPIO10/1588_LOAD_SAVE output	0
9	GPIO9/FASTLINK_FAIL	R/W	GPIO9/FASTLINK_FAIL output	0
8	GPIO8/I2C_SDA	R/W	GPIO8/I2C_SDA output	0
7	GPIO7/I2C_SCL_3	R/W	GPIO7/I2C_SCL_3 output	0
6	GPIO6/I2C_SCL_2	R/W	GPIO6/I2C_SCL_2 output	0
5	GPIO5/I2C_SCL_1	R/W	GPIO5/I2C_SCL_1 output	0
4	GPIO4/I2C_SCL_0	R/W	GPIO4/I2C_SCL_0 output	0
3	GPIO3/SIGDET3	R/W	GPIO3/SIGDET3 output	0
2	GPIO2/SIGDET2	R/W	GPIO2/SIGDET2 output	0
1	GPIO1/SIGDET1	R/W	GPIO1/SIGDET1 output	0
0	GPIO0/SIGDET0	R/W	GPIO0/SIGDET0 output	0

4.6.6 GPIO Pin Configuration

Register 17G in the GPIO register space controls whether a particular GPIO pin functions as an input or an output. The following table shows the settings available.

Table 102 • **GPIO Input/Output Configuration, Address 17G (0x11)**

Bit	Name	Access	Description	Default
15:14	Reserved	RO	Reserved	
13	GPIO13/1588_SPI_DO	R/W	GPIO13/1588_SPI_DO output enable	0
12	GPIO12/1588_SPI_CS	R/W	GPIO12/1588_SPI_CS output enable	0

Table 102 • **GPIO Input/Output Configuration, Address 17G (0x11) *(continued)***

Bit	Name	Access	Description	Default
11	GPIO11/1588_PPS_0	R/W	GPIO11/1588_PPS_0 output enable	0
10	GPIO10/1588_LOAD_SAVE	R/W	GPIO10/1588_LOAD_SAVE output enable	0
9	GPIO9/FASTLINK_FAIL	R/W	GPIO9/FASTLINK_FAIL output enable	0
8	GPIO8/I2C_SDA	R/W	GPIO8/I2C_SDA output enable	0
7	GPIO7/I2C_SCL_3	R/W	GPIO7/I2C_SCL_3 output enable	0
6	GPIO6/I2C_SCL_2	R/W	GPIO6/I2C_SCL_2 output enable	0
5	GPIO5/I2C_SCL_1	R/W	GPIO5/I2C_SCL_1 output enable	0
4	GPIO4/I2C_SCL_0	R/W	GPIO4/I2C_SCL_0 output enable	0
3	GPIO3/SIGDET3	R/W	GPIO3/SIGDET3 output enable	0
2	GPIO2/SIGDET2	R/W	GPIO2/SIGDET2 output enable	0
1	GPIO1/SIGDET1	R/W	GPIO1/SIGDET1 output enable	0
0	GPIO0/SIGDET0	R/W	GPIO0/SIGDET0 output	0

4.6.7 Microprocessor Command

Register 18G is a command register. Bit 15 tells the internal processor to execute the command. When bit 15 is cleared the command has completed. Software needs to wait until bit 15 = 0 before proceeding with the next PHY register access. Bit 14 = 1 typically indicates an error condition where the squelch patch was not loaded. Use the following steps to execute the command:

1. Write desired command
2. Check bit 15 (move existing text)
3. Check bit 14 (if set, then error)

Note: Commands may take up to 25 ms to complete before bit 15 changes to 0.

Table 103 • **Microprocessor Command Register, Address 18G**

Command	Setting
Enable 4 ports MAC SGMII	0x80F0
Enable 4 ports MAC QSGMII	0x80E0
QSGMII transmitter control(1)	
1588 initialization(2)	0x801A
Enable 4 ports Media 1000BASE-X	0x8FC1(3)
Enable 4 ports Media 100BASE-FX	0x8FD1(3)

1. Contact your Microsemi representative for an initialization script that greatly simplifies the programming of QSGMII transmit controls.
2. Initializes six analyzers in both 1588 IP blocks A and B. This needs to be done after reset and before the 1588 blocks are used.
3. The “F” in the command has a bit representing each of the four PHYs. To exclude a PHY from the configuration, set its bit to 0. For example, the configuration of PHY 3 and PHY 2 to 1000BASE-X would be 1100 or a “C” and the command would be 0x8CC1.

4.6.8 MAC Configuration and Fast Link

Register 19G in the GPIO register space controls the MAC interface mode and the selection of the source PHY for the fast link failure indication. The following table shows the settings available for the GPIO9/FASTLINK-FAIL pin.

Table 104 • **MAC Configuration and Fast Link Register, Address 19G (0x13)**

Bit	Name	Access	Description	Default
15:14	MAC configuration	R/W	Select MAC interface mode 00: SGMII 01: QSGMII 10: Reserved 11: Reserved	00
13:4	Reserved	RO	Reserved	
3:0	Fast link failure port setting	R/W	Select fast link failure PHY source 0000: Port0 0001: Port1 0010: Port2 0011: Port3 1100–1111: Output disabled	0xF

4.6.9 Two-Wire Serial MUX Control 1

The following table shows the settings available to control the integrated two-wire serial MUX.

Table 105 • **Two-Wire Serial MUX Control 1, Address 20G (0x14)**

Bit	Name	Access	Description	Default
15:9	Two-wire serial device address	R/W	Top 7 bits of the 8-bit address sent out on the two wire serial stream. The bottom bit is the read/write signal, which is controlled by register 21G, bit 8. SFPs use 0xA0.	0xA0
8:6	Reserved	RO	Reserved.	
5:4	Two-wire serial SCL clock frequency	R/W	00: 50 kHz 01: 100 kHz 10: 400 kHz 11: 2 MHz	01
3	Two-wire serial MUX port 3 enable	R/W	1: Enabled. 0: Two-wire serial disabled. Becomes GPIO pin.	0
2	Two-wire serial MUX port 2 enable	R/W	1: Enabled. 0: Two-wire serial disabled. Becomes GPIO pin.	0
1	Two-wire serial MUX port 1 enable	R/W	1: Enabled. 0: Two-wire serial disabled. Becomes GPIO pin.	0
0	Two-wire serial MUX port 0 enable	R/W	1: Enabled. 0: Two-wire serial disabled. Two-wire serial MUX port 0 becomes GPIO pin if serial LED function is enabled, regardless of the settings of this bit.	0

4.6.10 Two-Wire Serial MUX Control 2

Register 21G is used to control the two-wire serial MUX for status and control of two-wire serial slave devices.

Table 106 • **Two-Wire Serial MUX Interface Status and Control, Address 21G (0x15)**

Bit	Name	Access	Description	Default
15	Two-wire serial MUX ready	RO	1: Two-wire serial MUX is ready for read or write	
14:12	Reserved	RO	Reserved	
11:10	PHY port Address	R/W	Specific VSC8574-01 PHY port being addressed.	00
9	Enable two-wire serial MUX access	R/W	Self-clearing bit. 1: Execute read or write through the two-wire serial MUX based on the settings of register bit 21G.8	0
8	Two-wire serial MUX read or write	R/W	1: Read from two-wire serial MUX 0: Write to two-wire serial MUX	1
7:0	Two-wire serial MUX address	R/W	Sets the address of the two-wire serial MUX used to direct read or write operations.	0x00

4.6.11 Two-Wire Serial MUX Data Read/Write

Register 22G in the extended register space enables access to the two-wire serial MUX.

Table 107 • **Two-Wire Serial MUX Data Read/Write, Address 22G (0x16)**

Bit	Name	Access	Description	Default
15:8	Two-wire serial MUX read data	RO	Eight-bit data read from two-wire serial MUX; requires setting both register 21G.9 and 21G.8 to 1.	
7:0	Two-wire serial MUX write data	R/W	Eight-bit data to be written to two-wire serial MUX.	0x00

4.6.12 Recovered Clock 1 Control

Register 23G in the extended register space controls the functionality of the recovered clock 1 output signal.

Table 108 • **Recovered Clock 1 Control, Address 23G (0x17)**

Bit	Name	Access	Description	Default
15	Enable RCVRDCLK1	R/W	1: Enable recovered clock 1 output 0: Disable recovered clock 1 output	0
14:11	Clock source select	R/W	Select bits for source PHY for recovered clock: 0000: PHY0 0001: PHY1 0010: PHY2 0011: PHY3 0100–1111: Reserved	0000

Table 108 • **Recovered Clock 1 Control, Address 23G (0x17) *(continued)***

Bit	Name	Access	Description	Default
10:8	Clock frequency select	R/W	Select output clock frequency: 000: 25 MHz output clock 001: 125 MHz output clock 010: 31.25 MHz output clock 011–111: Reserved	000
7:6	Reserved	RO	Reserved.	
5:4	Clock squelch level	R/W	Select clock squelch level 00: Automatically squelch clock to low when the link is not up, is unstable, is up in a mode that does not support the generation of a recovered clock (1000BASE-T master or 10BASE-T), or is up in EEE mode (100BASE-TX or 1000BASE-T slave). 01: Same as 00 except that the clock is also generated in 1000BASE-T master and 10BASE-T link-up modes. This mode also generates a recovered clock output in EEE mode during reception of LP_IDLE. 10: Squelch only when the link is not up. 11: Disable clock squelch. **Note:** A clock from the SerDes or Cu PHY will be output on the recovered clock output in this mode when the link is down. When the CLK_SQUELCH_IN pin is set high, it squelches the recovered clocks regardless of bit settings.	
3	Reserved	RO	Reserved.	
2:0	Clock selection for specified PHY	R/W	000: Serial media recovered clock 001: Copper PHY recovered clock 010: Copper PHY transmitter TCLK 011–111: Reserved	000

4.6.13 Recovered Clock 2 Control

Register 24G in the extended register space controls the functionality of the recovered clock 2 output signal.

Table 109 • **Recovered Clock 2 Control, Address 24G (0x18)**

Bit	Name	Access	Description	Default
15	Enable RCVRDCLK2	R/W	Enable recovered clock 2 output	0
14:11	Clock source select	R/W	Select bits for source PHY for recovered clock: 0000: PHY0 0001: PHY1 0010: PHY2 0011: PHY3 0100–1111: Reserved	0000

Table 109 • **Recovered Clock 2 Control, Address 24G (0x18) *(continued)***

Bit	Name	Access	Description	Default
10:8	Clock frequency select	R/W	Select output clock frequency: 000: 25 MHz output clock 001: 125 MHz output clock 010: 31.25 MHz output clock 011–111: Reserved	000
7:6	Reserved	RO	Reserved	
5:4	Clock squelch level	R/W	Select clock squelch level: 00: Automatically squelch clock to low when the link is not up, is unstable, is up in a mode that does not support the generation of a recovered clock (1000BASE-T master or 10BASE-T), or is up in EEE mode (100BASE-TX or 1000BASE-T slave). 01: Same as 00 except that the clock is also generated in 1000BASE-T master and 10BASE-T link-up modes. This mode also generates a recovered clock output in EEE mode during reception of LP_IDLE 10: Squelch only when the link is not up 11: Disable clock squelch. **Note:** A clock from the SerDes or Cu PHY will be output on the recovered clock output in this mode when the link is down. **Note:** A clock from the SerDes or Cu PHY will be output on the recovered clock output in this mode when the link is down. When the CLK_SQUELCH_IN pin is set high, it squelches the recovered clocks regardless of bit settings.	
3	Reserved	RO	Reserved	
2:0	Clock selection for specified PHY	R/W	000: Serial media recovered clock 001: Copper PHY recovered clock 010–111: Reserved	000

4.6.14 Enhanced LED Control

The following table contains the bits to control advanced functionality of the parallel and serial LED signals.

Table 110 • **Enhanced LED Control, Address 25G (0x19)**

Bit	Name	Access	Description	Default
15:8	LED pulsing duty cycle control	R/W	Programmable control for LED pulsing duty cycle when bit 30.12 is set to 1. Valid settings are between 0 and 198. A setting of 0 corresponds to a 0.5% duty cycle and 198 corresponds to a 99.5% duty cycle. Intermediate values change the duty cycle in 0.5% increments	00

Table 110 • **Enhanced LED Control, Address 25G (0x19) *(continued)***

Bit	Name	Access	Description	Default
7	Port 1 enhanced serial LED output enable	R/W	Enable the enhanced serial LED output functionality for port 1 LED pins. 1: Enhanced serial LED outputs 0: Normal function	0
6	Port 0 enhanced serial LED output enable	R/W	Enable the enhanced serial LED output functionality for port 0 LED pins. 1: Enhanced serial LED outputs 0: Normal function	0
5:3	Serial LED frame rate selection	R/W	Select frame rate of serial LED stream 000: 2500 Hz frame rate 001: 1000 Hz frame rate 010: 500 Hz frame rate 011: 250 Hz frame rate 100: 200 Hz frame rate 101: 125 Hz frame rate 110: 40 Hz frame rate 111: Output basic serial LED stream See Table 32, page 78.	
2:1	Serial LED select	R/W	Select which LEDs from each PHY to enable on the serial stream 00: Enable all four LEDs of each PHY 01: Enable LEDs 2, 1 and 0 of each PHY 10: Enable LEDs 1 and 0 of each PHY 11: Enable LED 0 of each PHY	00
0	LED port swapping	R/W	See LED Port Swapping, page 79.	

4.6.15 Global Interrupt Status

The following table contains the interrupt status from the various sources to indicate which one caused that last interrupt on the pin.

Table 111 • **Global Interrupt Status, Address 29G (0x1D)**

Bit	Name	Access	Description
15:12	Reserved	RO	Reserved
11	PHY3 1588(1)	RO	PHY3 1588 interrupt source indication 0: PHY3 1588 caused the interrupt 1: PHY3 1588 did not cause the interrupt
10	PHY2 1588(1)	RO	PHY 2 1588 interrupt source indication 0: PHY2 1588 caused the interrupt 1: PHY2 1588 did not cause the interrupt
9	PHY1 1588(1)	RO	PHY 1 1588 interrupt source indication 0: PHY1 1588 caused the interrupt 1: PHY1 1588 did not cause the interrupt
8	PHY0 1588(1)	RO	PHY 0 1588 interrupt source indication 0: PHY0 1588 caused the interrupt 1: PHY0 1588 did not cause the interrupt
7:4	Reserved	R	Reserved

Table 111 • **Global Interrupt Status, Address 29G (0x1D)** ***(continued)***

Bit	Name	Access	Description
3	PHY3 interrupt source(1)	RO	PHY3 interrupt source indication 0: PHY3 caused the interrupt 1: PHY3 did not cause the interrupt
2	PHY2 interrupt source(1)	RO	PHY2 interrupt source indication 0: PHY2 caused the interrupt 1: PHY2 did not cause the interrupt
1	PHY1 interrupt source(1)	RO	PHY1 interrupt source indication 0: PHY1 caused the interrupt 1: PHY1 did not cause the interrupt
0	PHY0 interrupt source(1)	RO	PHY0 interrupt source indication 0: PHY0 caused the interrupt 1: PHY0 did not cause the interrupt

1. This bit is set to 1 when the corresponding PHY's Interrupt Status register 26 (0x1A) is read.

For information about 1588 IP register access, see Accessing 1588 IP Registers, page 71.

4.7 Clause 45 Registers to Support Energy Efficient Ethernet and 802.3bf

This section describes the Clause 45 registers that are required to support energy efficient Ethernet. Access to these registers is through the IEEE standard registers 13 and 14 (MMD access control and MMD data or address registers) as described in section 4.2.11 and 4.2.12.

The following table lists the addresses and register names in the Clause 45 register page space. When the link is down, 0 is the value returned for the x.180x addresses.

Table 112 • **Clause 45 Registers Page Space**

Address	Name
1.1801	Tx maximum delay through PHY (PMA/PMD/PCS, until 1588 block)
1.1803	Tx minimum delay through PHY (PMA/PMD/PCS, until 1588 block)
1.1805	Rx maximum delay through PHY (PMA/PMD/PCS, until 1588 block)
1.1807	Rx minimum delay through PHY (PMA/PMD/PCS, until 1588 block)
3.1	PCS status 1
3.1801	Tx maximum delay through 1588
3.1803	Tx minimum delay through 1588
3.1805	Rx maximum delay through 1588
3.1807	Rx minimum delay through 1588
3.20	EEE capability
3.22	EEE wake error counter
4.1801	Tx maximum delay through xMII (SGMII, QSGMII, including FIFO variations)
4.1803	Tx minimum delay through xMII (SGMII, QSGMII, including FIFO variations)
4.1805	Rx maximum delay through xMII (SGMII, QSGMII, including FIFO variations)
4.1807	Rx minimum delay through xMII (SGMII, QSGMII, including FIFO variations)
7.60	EEE advertisement
7.61	EEE link partner advertisement

4.7.1 PCS Status 1

The bits in the PCS Status 1 register provide a status of the EEE operation from the PCS for the link that is currently active.

Table 113 • **PCS Status 1, Address 3.1**

Bit	Name	Access	Description
15:12	Reserved	RO	Reserved
11	Tx LPI received	RO/LH	1: Tx PCS has received LPI 0: LPI not received
10	Rx LPI received	RO/LH	1: Rx PCS has received LPI 0: LPI not received
9	Tx LPI indication	RO	1: Tx PCS is currently receiving LPI 0: PCS is not currently receiving LPI
8	Rx LPI indication	RO	1: Rx PCS is currently receiving LPI 0: PCS is not currently receiving LPI
7:3	Reserved	RO	Reserved
2	PCS receive link status	RO	1: PCS receive link up 0: PCS receive link down
1:0	Reserved	RO	Reserved

4.7.2 EEE Capability

This register is used to indicate the capability of the PCS to support EEE functions for each PHY type. The following table shows the bit assignments for the EEE capability register.

Table 114 • **EEE Capability, Address 3.20**

Bit	Name	Access	Description
15:3	Reserved	RO	Reserved
2	1000BASE-T EEE	RO	1: EEE is supported for 1000BASE-T 0: EEE is not supported for 1000BASE-T
1	100BASE-TX EEE	RO	1: EEE is supported for 100BASE-TX 0: EEE is not supported for 100BASE-TX
0	Reserved	RO	Reserved

4.7.3 EEE Wake Error Counter

This register is used by PHY types that support EEE to count wake time faults where the PHY fails to complete its normal wake sequence within the time required for the specific PHY type. The definition of the fault event to be counted is defined for each PHY and can occur during a refresh or a wakeup as defined by the PHY. This 16-bit counter is reset to all zeros when the EEE wake error counter is read or when the PHY undergoes hardware or software reset.

Table 115 • **EEE Wake Error Counter, Address 3.22**

Bit	Name	Access	Description
15:0	Wake error counter	RO	Count of wake time faults for a PHY

4.7.4 EEE Advertisement

This register defines the EEE advertisement that is sent in the unformatted next page following a EEE technology message code. The following table shows the bit assignments for the EEE advertisement register.

Table 116 • **EEE Advertisement, Address 7.60**

Bit	Name	Access	Description	Default
15:3	Reserved	RO	Reserved	
2	1000BASE-T EEE	R/W	1: Advertise that the 1000BASE-T has EEE capability 0: Do not advertise that the 1000BASE-T has EEE capability	0
1	100BASE-TX EEE	R/W	1: Advertise that the 100BASE-TX has EEE capability 0: Do not advertise that the 100BASE-TX has EEE capability	0
0	Reserved	RO	Reserved	

4.7.5 EEE Link Partner Advertisement

All the bits in the EEE LP Advertisement register are read only. A write to the EEE LP advertisement register has no effect. When the AN process has been completed, this register will reflect the contents of the link partner's EEE advertisement register. The following table shows the bit assignments for the EEE advertisement register.

Table 117 • **EEE Advertisement, Address 7.61**

Bit	Name	Access	Description
15:3	Reserved	RO	Reserved
2	1000BASE-T EEE	RO	1: Link partner is advertising EEE capability for 1000BASE-T 0: Link partner is not advertising EEE capability for 1000BASE-T
1	100BASE-TX EEE	RO	1: Link partner is advertising EEE capability for 100BASE-TX 0: Link partner is not advertising EEE capability for 100BASE-TX
0	Reserved	RO	Reserved

The following table shows the bit assignments for the 802.3bf registers. When the link is down, 0 is the value returned. cl45reg1_1801 would be device address of 1 and register address of 1801.

Table 118 • **802.3bf Registers**

Register	Name	Function
1.1801	cl45reg1_1801_val[15:0]	Tx maximum delay through PHY (PMA/PMD/PCS, until 1588 block)
1.1803	cl45reg1_1803_val[15:0]	Tx minimum delay through PHY (PMA/PMD/PCS, until 1588 block)
1.1805	cl45reg1_1805_val[15:0]	Rx maximum delay through PHY (PMA/PMD/PCS, until 1588 block)
1.1807	cl45reg1_1807_val[15:0]	Rx minimum delay through PHY (PMA/PMD/PCS, until 1588 block)

Table 118 • **802.3bf Registers *(continued)***

Register	Name	Function
3.1801	cl45reg3_1801_val[15:0]	Tx maximum delay through 1588
3.1803	cl45reg3_1803_val[15:0]	Tx minimum delay through 1588
3.1805	cl45reg3_1805_val[15:0]	Rx maximum delay through 1588
3.1807	cl45reg3_1807_val[15:0]	Rx minimum delay through 1588
4.1801	cl45reg4_1801_val[15:0]	Tx maximum delay through xMII (SGMII, QSGMII, including FIFO variations)
4.1803	cl45reg4_1803_val[15:0]	Tx minimum delay through xMII (SGMII, QSGMII, including FIFO variations)
4.1805	cl45reg4_1805_val[15:0]	Rx maximum delay through xMII (SGMII, QSGMII, including FIFO variations)
4.1807	cl45reg4_1807_val[15:0]	Rx minimum delay through xMII (SGMII, QSGMII, including FIFO variations)

4.8 1588 IP Registers

This section provides information about the 1588 IP programming interface, register maps, register descriptions, and register tables of the device.

In writing to registers with reserved bits, use a read-modify-write technique, where the entire register is read, but with only the user bits to be chance are modified. Do not change the values of the register and bits marked as reserved. Their read state should not be considered static or unchanging. Unspecified registers and bits must be written to 0 and can be ignored when read.

The first-level table lists all register targets and associated base addresses. The second-level table lists registers groups and offsets within targets, and the third-level tables list registers within the register groups.

Both register groups and registers may be replicated (repeated) a number of times. The repeat-count and the distance between two repetitions are listed in the Instances and Address Spacing column. Spacing is omitted if there is only one instance. The Offset within Target and the Offset within Register Group columns hold the offset of the first instance of the register group or register.

Use the following steps to calculate the absolute address of a given register.

1. Multiply the register group's replication number by the register group's address spacing.
2. Add the result to the register group's offset within the target.
3. Multiply the register's replication number with the register's address spacing.
4. Add the result to the register's offset within the register group.
5. Add these two numbers to the absolute address of the target in question.

Table 119 • **Register Groups in IP_1588**

Register Group Name	Offset within Target	Instances and Address Spacing	Description	Details
IP_1588_TOP_CFG_STAT	0x00000000	1	1588 IP control and status registers	Page 141
IP_1588_LTC	0x00000040	1	1588 IP local time counter	Page 142
TS_FIFO_SI	0x00000080	1	Timestamp FIFO serial interface registers	Page 147
INGR_PREDICTOR	0x00000088	1	Ingress (Rx) registers	Page 148
EGR_PREDICTOR	0x00000098	1	Egress (Tx) registers	Page 150
MISC_CFG	0x000000B0	1	Miscellaneous chip-specific configuration and control signals	Page 153
INGR_IP_1588_CFG_STAT	0x000000B4	1	1588 IP control and status registers	Page 153
INGR_IP_1588_TSP	0x000000D4	1	1588 IP timestamp processor	Page 156
INGR_IP_1588_DF	0x000000E8	1	1588 IP delay FIFO	Page 158
INGR_IP_1588_TSFIFO	0x000000EC	1	1588 IP timestamp FIFO	Page 159
INGR_IP_1588_RW	0x00000110	1	1588 IP rewriter	Page 163
EGR_IP_1588_CFG_STAT	0x00000134	1	1588 IP control and status registers	Page 164
EGR_IP_1588_TSP	0x00000154	1	1588 IP timestamp processor	Page 167
EGR_IP_1588_DF	0x00000168	1	1588 IP delay FIFO	Page 169
EGR_IP_1588_TSFIFO	0x0000016C	1	1588 IP timestamp FIFO	Page 169

Table 119 • **Register Groups in IP_1588 *(continued)***

Register Group Name	Offset within Target	Instances and Address Spacing	Description	Details
EGR_IP_1588_RW	0x00000190	1	1588 IP rewriter	Page 174

4.8.1 IP_1588:IP_1588_TOP_CFG_STAT

Parent:

Instances: 1

Table 120 • **Registers in IP_1588_TOP_CFG_STAT**

Register Name	Offset within Register Group	Instances and Address Spacing	Description	Details
INTERFACE_CTL	0x00000000	1	Interface control register	Page 141
ANALYZER_MODE	0x00000004	1	Analyzer mode register	Page 142
SPARE_REGISTER	0x00000008	1	Spare scratchpad register	Page 142

4.8.1.1 IP_1588:IP_1588_TOP_CFG_STAT:INTERFACE_CTL

Parent: IP_1588:IP_1588_TOP_CFG_STAT

Instances: 1

Table 121 • **Fields in INTERFACE_CTL**

Field Name	Bit	Access	Description	Default
CLK_ENA	6	R/W	Clock enable for the 1588 IP block. This bit is an output of the IP and can be used externally to gate the clocks to the block off when the block is disabled. This bit is not used inside the IP block. 0: Clocks disabled 1: Clocks enabled	0x0
BYPASS	2	R/W	When 1, the 1588 IP block is bypassed. This is the default state. Changing this bit to 0 will allow 1588 processed data to flow out of the block. This bit is internally registered so that it only takes effect during an IDLE period in the data stream. This allows for a more seamless transition from bypass to data passing modes. 0: Data mode 1: Bypass mode	0x1

Table 121 • **Fields in INTERFACE_CTL *(continued)***

Field Name	Bit	Access	Description	Default
MII_PROTOCOL	1:0	R/W	Defines the operating mode in which the attached PCS block operates 0: XGMII-64 1: Reserved 2: GMII 3: MII	0x0

4.8.1.2 IP_1588:IP_1588_TOP_CFG_STAT:ANALYZER_MODE

Parent: IP_1588:IP_1588_TOP_CFG_STAT

Instances: 1

Table 122 • **Fields in ANALYZER_MODE**

Field Name	Bit	Access	Description	Default
ENCAP_FLOW_MODE	18:16	R/W	Defines how flow matching is performed in each encapsulation engine 0: Match any flow 1: Strict matching	0x0
EGR_ENCAP_ENGINE_ENA	6:4	R/W	Enables for the egress encapsulation engines. Enable bit 0 and 1 are for the PTP engines; bit 2 is for the OAM engine. 0: Disabled 1: Enabled	0x0
INGR_ENCAP_ENGINE_ENA	2:0	R/W	Enables for the ingress encapsulation engines. Enable bit 0 & 1 are for the PTP engines; bit 2 is for the OAM engine. 0: Disabled 1: Enabled	0x0

4.8.1.3 IP_1588:IP_1588_TOP_CFG_STAT:SPARE_REGISTER

Parent: IP_1588:IP_1588_TOP_CFG_STAT

Instances: 1

Table 123 • **Fields in SPARE_REGISTER**

Field Name	Bit	Access	Description	Default
SPARE_REGISTER	31:0	R/W	Spare scratchpad register	0x00000000

4.8.2 IP_1588:IP_1588_LTC

Parent:

Instances: 1

Configuration and status register set for the IEEE1588 local time counter

Table 124 • **Registers in IP_1588_LTC**

Register Name	Offset within Register Group	Instances and Address Spacing	Description	Details
LTC_CTRL	0x00000000	1	LTC control	Page 143
LTC_LOAD_SEC_H	0x00000004	1	LTC load seconds (high)	Page 144
LTC_LOAD_SEC_L	0x00000008	1	LTC load seconds (low)	Page 144
LTC_LOAD_NS	0x0000000C	1	LTC load nanoseconds	Page 145
LTC_SAVED_SEC_H	0x00000010	1	LTC saved seconds (high)	Page 145
LTC_SAVED_SEC_L	0x00000014	1	LTC saved seconds (low)	Page 145
LTC_SAVED_NS	0x00000018	1	LTC saved nanoseconds	Page 145
LTC_SEQUENCE	0x0000001C	1	LTC sequence configuration	Page 146
LTC_SEQ	0x00000020	1	LTC sequence configuration	Page 146
LTC_AUTO_ADJUST	0x00000028	1	LTC auto adjustment	Page 146
LTC_1PPS_WIDTH_ADJ	0x0000002C	1	LTC 1 pulse per second width adjustment	Page 147

4.8.2.1 IP_1588:IP_1588_LTC:LTC_CTRL

Parent: IP_1588:IP_1588_LTC

Instances: 1

LTC control

Table 125 • **Fields in LTC_CTRL**

Field Name	Bit	Access	Description	Default
LTC_CLK_SEL	14:12	R/W	Select the clock source for the LTC block. The actual clock mux is external to the IP block, this field merely provides the select lines to the clock mux. These three select lines are outputs of the IP block and are not used internally. The single clock signal is then fed to the LTC input.The three bits allow for one of up to eight possible clock sources to be selected. 0: External Pin is source of clock 1: Client Rx Clock 2: Client Tx Clock 3: Line Rx Clock 4: Line Tx Clock 5-7: INVALID	0x0
LTC_ALT_MODE_PPS_BIT	10:6	R/W	Selects one bit of the LTC internal nanosecond counter (0-29) to drive to the PPS pin when in the alternate mode (LTC_ALT_MODE register bit set).	0x00

Table 125 • **Fields in LTC_CTRL *(continued)***

Field Name	Bit	Access	Description	Default
LTC_ALT_MODE	5	R/W	Enable an alternate mode that modifies the default PPS output. See the LTC_ALT_MODE_PPS_BIT field description. 0: Normal mode 1: Alternate mode	0x0
LTC_AUTO_ADJUST_UPDATE	4	One-shot	When written to a 1 causes the local time counter to update the automatic adjustment values from the LTC_AUTO_ADJUST register. The current automatic adjustment is reset to start with the new values. Automatically cleared. 0: No change to any previous updates (write), or update has completed (read) 1: Use new values from LTC_AUTO_ADJUST register	0x0
LTC_ADD_SUB_1NS_REQ	3	One-shot	When written to a 1 causes a request for 1 ns to be added or subtracted (depending upon the LTC_ADD_SUB_1NS field) from the Local time. Automatically cleared. 0: No Add/Subtract from local time (write), Bit has auto cleared (read) 1: Add/Subtract 1ns from the local time	0x0
LTC_ADD_SUB_1NS	2	R/W	This bit selects whether a write to the LTC_ADD_SUB_1NS_REQ register causes an add or subtract 0: Subtract 1 ns 1: Add 1ns to the local time	0x0
LTC_SAVE_ENA	1	R/W	LTC save enable Enables the load/save for channel 0 and 1 pin (GPIO 1) to save the LTC_SAVE seconds/nanoseconds registers.	0x0
LTC_LOAD_ENA	0	R/W	LTC load enable Enables load/save for channel 0 and 1 pin (GPIO 1) to load the LTC_LOAD seconds/nanoseconds registers.	0x0

4.8.2.2 IP_1588:IP_1588_LTC:LTC_LOAD_SEC_H

Parent: IP_1588:IP_1588_LTC

Instances: 1

LTC load seconds (high)

Table 126 • **Fields in LTC_LOAD_SEC_H**

Field Name	Bit	Access	Description	Default
LTC_LOAD_SEC_H	15:0	R/W	LTC load seconds (high)	0x0000

4.8.2.3 IP_1588:IP_1588_LTC:LTC_LOAD_SEC_L

Parent: IP_1588:IP_1588_LTC

Instances: 1

LTC load seconds (low)

Table 127 • **Fields in LTC_LOAD_SEC_L**

Field Name	Bit	Access	Description	Default
LTC_LOAD_SEC_L	31:0	R/W	LTC load seconds (low)	0x00000000

4.8.2.4 IP_1588:IP_1588_LTC:LTC_LOAD_NS

Parent: IP_1588:IP_1588_LTC

Instances: 1

LTC load nanoseconds

Table 128 • **Fields in LTC_LOAD_NS**

Field Name	Bit	Access	Description	Default
LTC_LOAD_NS	31:0	R/W	LTC load nanoseconds	0x00000000

4.8.2.5 IP_1588:IP_1588_LTC:LTC_SAVED_SEC_H

Parent: IP_1588:IP_1588_LTC

Instances: 1

LTC saved seconds (high)

Table 129 • **Fields in LTC_SAVED_SEC_H**

Field Name	Bit	Access	Description	Default
LTC_SAVED_SEC_H	15:0	R/O	LTC saved seconds (high)	0x0000

4.8.2.6 IP_1588:IP_1588_LTC:LTC_SAVED_SEC_L

Parent: IP_1588:IP_1588_LTC

Instances: 1

LTC saved seconds (low)

Table 130 • **Fields in LTC_SAVED_SEC_L**

Field Name	Bit	Access	Description	Default
LTC_SAVED_SEC_L	31:0	R/O	LTC saved seconds (low)	0x00000000

4.8.2.7 IP_1588:IP_1588_LTC:LTC_SAVED_NS

Parent: IP_1588:IP_1588_LTC

Instances: 1

LTC saved nanoseconds

Table 131 • **Fields in LTC_SAVED_NS**

Field Name	Bit	Access	Description	Default
LTC_SAVED_NS	31:0	R/O	LTC saved nanoseconds	0x00000000

4.8.2.8 IP_1588:IP_1588_LTC:LTC_SEQUENCE

Parent: IP_1588:IP_1588_LTC

Instances: 1

LTC sequence configuration

Table 132 • **Fields in LTC_SEQUENCE**

Field Name	Bit	Access	Description	Default
RESERVED	19:12	R/W	Must be set to its default.	0x01
RESERVED	11:8	R/W	Must be set to its default.	0x4
RESERVED	7:4	R/W	Must be set to its default.	0x4
LTC_SEQUENCE_A	3:0	R/W	LTC sequence of increments (nanoseconds)	0x4

4.8.2.9 IP_1588:IP_1588_LTC:LTC_SEQ

Parent: IP_1588:IP_1588_LTC

Instances: 1

LTC sequence configuration

Table 133 • **Fields in LTC_SEQ**

Field Name	Bit	Access	Description	Default
RESERVED	20	R/W	Must be set to its default.	0x1
LTC_SEQ_ADD_SUB	19	R/W	LTC sequence correction sign 0: Subtract 1 ns adjustment 1: Add 1 ns adjustment	0x1
LTC_SEQ_E	18:0	R/W	LTC sequence correction (nanoseconds * 1 million) Example for 6.4 ns period (156.25 MHz): LTC_SEQUENCE.LTC_SEQUENCE_A = 6 (6 ns) LTC_SEQ.LTC_SEQ_ADD_SUB = 1 (add 1 ns) LTC_SEQ.LTC_SEQ_E = 400000 (0.4 ns * 1,000,000)	0x00000

4.8.2.10 IP_1588:IP_1588_LTC:LTC_AUTO_ADJUST

Parent: IP_1588:IP_1588_LTC

Instances: 1

LTC auto adjustment

Table 134 • **Fields in LTC_AUTO_ADJUST**

Field Name	Bit	Access	Description	Default
LTC_AUTO_ADD_SUB_1NS	31:30	R/W	LTC auto adjustment add/subtract 1 ns 0,3: No adjustment 1: Adjust by adding 1 ns upon rollover 2: Adjust by subtracting 1 ns upon rollover	0x0
LTC_AUTO_ADJUST_NS	29:0	R/W	LTC auto adjustment rollover (nanoseconds)	0x00000000

4.8.2.11 IP_1588:IP_1588_LTC:LTC_1PPS_WIDTH_ADJ

Parent: IP_1588:IP_1588_LTC

Instances: 1

LTC 1 pulse per second width adjustment

Table 135 • **Fields in LTC_1PPS_WIDTH_ADJ**

Field Name	Bit	Access	Description	Default
LTC_1PPS_WIDTH_ADJ	29:0	R/W	The 1 pulse per second is high for the programmed number of nanoseconds within +/- the sequence increment value	0x1DCD6500

4.8.3 IP_1588:TS_FIFO_SI

Parent:

Instances: 1

Table 136 • **Registers in TS_FIFO_SI**

Register Name	Offset within Register Group	Instances and Address Spacing	Description	Details
TS_FIFO_SI_CFG	0x00000000	1	Timestamp FIFO serial interface configuration register	Page 147
TS_FIFO_SI_TX_CNT	0x00000004	1	Transmitted timestamp count	Page 148

4.8.3.1 IP_1588:TS_FIFO_SI:TS_FIFO_SI_CFG

Parent: IP_1588:TS_FIFO_SI

Instances: 1

Polarity and cycle counts are configurable from port 0 only.

Table 137 • **Fields in TS_FIFO_SI_CFG**

Field Name	Bit	Access	Description	Default
SI_CLK_PHA	25	R/W	SI clock phase control 0: SI_CLK falling edge changes output data 1: SI_CLK rising edge changes output data	0x0
SI_CLK_POL	24	R/W	SI clock polarity control 0: SI_CLK starts and ends (idles) low 1: SI_CLK starts and ends (idles) high	0x0
SI_EN_DES_CYCS	23:20	R/W	Number of CSR clock periods SI_EN negates between writes (deselected). The CSR clock period is one-half the REFCLK pin's period.	0x0
SI_CLK_HI_CYCS	10:6	R/W	Number of CSR clock periods that the SI_CLK is high. The CSR clock period is one-half the REFCLK pin's period.	0x02
SI_CLK_LO_CYCS	5:1	R/W	Number of CSR clock periods that the SI_CLK is low. The CSR clock period is one-half the REFCLK pin's period.	0x02
TS_FIFO_SI_ENA	0	R/W	Timestamp FIFO serial interface block control 0: Disable Timestamp FIFO serial interface block 1: Enable Timestamp FIFO serial interface block	0x0

4.8.3.2 IP_1588:TS_FIFO_SI:TS_FIFO_SI_TX_CNT

Parent: IP_1588:TS_FIFO_SI

Instances: 1

Counter for the number of timestamps transmitted to the interface.

Table 138 • **Fields in TS_FIFO_SI_TX_CNT**

Field Name	Bit	Access	Description	Default
TS_FIFO_SI_TX_CNT	31:0	R/W	Counter value	0x00000000

4.8.4 IP_1588:INGR_PREDICTOR

Parent:

Instances: 1

Table 139 • **Registers in INGR_PREDICTOR**

Register Name	Offset within Register Group	Instances and Address Spacing	Description	Details
IG_CFG	0x00000000	1	Ingress configuration register	Page 149

Table 139 • **Registers in INGR_PREDICTOR *(continued)***

Register Name	Offset within Register Group	Instances and Address Spacing	Description	Details
IG_PMA	0x00000004	1	Period of PMA clock in fractional nanoseconds	Page 149
IG_XFI	0x00000008	1	XFI delays in nanoseconds	Page 149
IG_OTN	0x0000000C	1	OTN configuration	Page 150

4.8.4.1 IP_1588:INGR_PREDICTOR:IG_CFG

Parent: IP_1588:INGR_PREDICTOR

Instances: 1

Table 140 • **Fields in IG_CFG**

Field Name	Bit	Access	Description	Default
WAF	21:16	R/W	WIS advanced (fixed) value. This is the number of register stages in the pipeline from the SFD detection logic through the 1588 IP, the PCS stages until the Rx gearbox and after the gearbox through the WIS until the frame overhead generation logic.	0x00
PAF	13:8	R/W	PCS advanced (fixed) value. This is the number of register stages in the pipeline from the SFD detection logic through the 1588 IP, the PCS stages until the Rx gearbox.	0x00
IG_ENABLE	0	R/W	When 1, the Ingress prediction block is enabled. 0: Disabled 1: Enabled	0x0

4.8.4.2 IP_1588:INGR_PREDICTOR:IG_PMA

Parent: IP_1588:INGR_PREDICTOR

Instances: 1

Table 141 • **Fields in IG_PMA**

Field Name	Bit	Access	Description	Default
TPMA	15:0	R/W	Period in fractional ns of the PMA clock. The binary number is in 9.7 format with 9 significant ns bits and 7 fractional ns bits. 9.7 format unsigned fractional binary number	0x0000

4.8.4.3 IP_1588:INGR_PREDICTOR:IG_XFI

Parent: IP_1588:INGR_PREDICTOR

Instances: 1

Table 142 • **Fields in IG_XFI**

Field Name	Bit	Access	Description	Default
XFI_MSB	31:16	R/W	The time taken for the 32 most significant bits of a 64-bit transaction to pass through the XFI logic. This is because the XFI processes the LS and MS bits separately on a 2x clock. 9.7 format unsigned fractional binary number	0x0000
XFI_LSB	15:0	R/W	The time taken for the 32 least significant bits of a 64-bit transaction to pass through the XFI logic. This is because the XFI processes the LS and MS bits separately on a 2x clock. 9.7 format unsigned fractional binary number	0x0000

4.8.4.4 IP_1588:INGR_PREDICTOR:IG_OTN

Parent: IP_1588:INGR_PREDICTOR

Instances: 1

Table 143 • **Fields in IG_OTN**

Field Name	Bit	Access	Description	Default
GAP_PERIOD	6:0	R/W	OTN clock gapping and virtual CBR pipe width information GAP_PERIOD[6:2] 0: Virtual CBR pipe, 64 bits wide 1: Virtual CBR pipe, 32 bits wide 2: Virtual CBR pipe, 1 bit wide others: Undefined GAP_PERIOD[1:0] 1: 1/15 OTN gapped clock. 2: 6/85 OTN gapped clock others: No gapping	0x00

4.8.5 IP_1588:EGR_PREDICTOR

Parent:

Instances: 1

Table 144 • **Registers in EGR_PREDICTOR**

Register Name	Offset within Register Group	Instances and Address Spacing	Description	Details
EG_CFG	0x00000000	1	Egress configuration register	Page 151
EG_WIS_FRAME	0x00000004	1	Egress WIS frame characteristics in clocks	Page 151
EG_WIS_DELAYS	0x00000008	1	Egress WIS delays in nanoseconds	Page 151
EG_PMA	0x0000000C	1	Egress PMA clock delay	Page 152

Table 144 • **Registers in EGR_PREDICTOR *(continued)***

Register Name	Offset within Register Group	Instances and Address Spacing	Description	Details
EG_XFI	0x00000010	1	XFI delays in nanoseconds	Page 152
EG_OTN	0x00000014	1	OTN configuration	Page 152

4.8.5.1 IP_1588:EGR_PREDICTOR:EG_CFG

Parent: IP_1588:EGR_PREDICTOR

Instances: 1

Table 145 • **Fields in EG_CFG**

Field Name	Bit	Access	Description	Default
WAF	21:16	R/W	WIS advanced (fixed) value. This is the number of register stages in the pipeline from the SFD detection logic through the 1588 IP, the PCS stages until the Tx gearbox and after the gearbox through the WIS until the frame overhead generation logic.	0x00
PAF	13:8	R/W	PCS advanced (fixed) value. This is the number of register stages in the pipeline from the SFD detection logic through the 1588 IP, the PCS stages until the Tx gearbox.	0x00
EG_ENABLE	0	R/W	When 1, the Egress prediction block is enabled. 0: Disabled 1: Enabled	0x0

4.8.5.2 IP_1588:EGR_PREDICTOR:EG_WIS_FRAME

Parent: IP_1588:EGR_PREDICTOR

Instances: 1

Table 146 • **Fields in EG_WIS_FRAME**

Field Name	Bit	Access	Description	Default
W_OH	23:16	R/W	WIS overhead time in clock cycles. This is the number of clocks in the Egress WIS overhead time. Typically 80.	0x50
W_FSIZE	11:0	R/W	Size of the WIS frame in clocks. Typically 2160.	0x870

4.8.5.3 IP_1588:EGR_PREDICTOR:EG_WIS_DELAYS

Parent: IP_1588:EGR_PREDICTOR

Instances: 1

Table 147 • **Fields in EG_WIS_DELAYS**

Field Name	Bit	Access	Description	Default
W_OH_NS	15:0	R/W	Duration of the WIS overhead in fractional nanoseconds. The number is in 12.4 format with 12 nanosecond bits and 4 fractional nanosecond bits. 12.4 format unsigned fractional binary number	0x0000

4.8.5.4 IP_1588:EGR_PREDICTOR:EG_PMA

Parent: IP_1588:EGR_PREDICTOR

Instances: 1

Table 148 • **Fields in EG_PMA**

Field Name	Bit	Access	Description	Default
TPMA	15:0	R/W	PMA clock period in fractional nanoseconds. This period is for the clock that drives the PMA, PCS, and WIS and is in 9.7 format with 9 significant ns bits and 7 fractional ns bits. 9.7 format unsigned fractional binary number	0x0000

4.8.5.5 IP_1588:EGR_PREDICTOR:EG_XFI

Parent: IP_1588:EGR_PREDICTOR

Instances: 1

Table 149 • **Fields in EG_XFI**

Field Name	Bit	Access	Description	Default
XFI_MSB	31:16	R/W	The time taken for the 32 most significant bits of a 64-bit transaction to pass through the XFI logic. This is because the XFI processes the LS and MS bits separately on a 2x clock. 9.7 format unsigned fractional binary number	0x0000
XFI_LSB	15:0	R/W	The time taken for the 32 least significant bits of a 64-bit transaction to pass through the XFI logic. This is because the XFI processes the LS and MS bits separately on a 2x clock. 9.7 format unsigned fractional binary number	0x0000

4.8.5.6 IP_1588:EGR_PREDICTOR:EG_OTN

Parent: IP_1588:EGR_PREDICTOR

Instances: 1

Table 150 • **Fields in EG_OTN**

Field Name	Bit	Access	Description	Default
GAP_PERIOD	6:0	R/W	OTN clock gapping and virtual CBR pipe width information GAP_PERIOD[6:2] 0: Virtual CBR pipe, 64 bits wide 1: Virtual CBR pipe, 32 bits wide 2: Virtual CBR pipe, 1 bit wide others: Undefined GAP_PERIOD[1:0] 1: 1/15 OTN gapped clock. 2: 6/85 OTN gapped clock others: PMA clock not gapped	0x00

4.8.6 IP_1588:MISC_CFG

Parent:

Instances: 1

This section contains other chip-specific configuration and control signals used in the 1588 IP wrapper.

Table 151 • **Registers in MISC_CFG**

Register Name	Offset within Register Group	Instances and Address Spacing	Description	Details
CFG	0x00000000	1	Miscellaneous configuration and control signals	Page 153

4.8.6.1 IP_1588:MISC_CFG:CFG

Parent: IP_1588:MISC_CFG

Instances: 1

Table 152 • **Fields in CFG**

Field Name	Bit	Access	Description	Default
SOF_OUT_SEL	1:0	R/W	Controls an external mux to select the SOF detection pulses for output instead of the 1 pulse-per-second (1 pps) signals. Either the ingress or egress SOF detection pulses can be selected instead of the 1 pps signal for output. Typically used for debugging. 0: 1 PPS output 1: Ingress SOF Detect output 2: Egress SOF Detect output 3: INVALID	0x0

4.8.7 IP_1588:INGR_IP_1588_CFG_STAT

Parent:

Instances: 1

Table 153 • **Registers in INGR_IP_1588_CFG_STAT**

Register Name	Offset within Register Group	Instances and Address Spacing	Description	Details
INGR_INT_STATUS	0x00000000	1	1588 IP interrupt status register	Page 154
INGR_INT_MASK	0x00000004	1	1588 IP interrupt mask register	Page 155
INGR_SPARE_REGISTER	0x00000008	1	Spare scratchpad register	Page 156

4.8.7.1 IP_1588:INGR_IP_1588_CFG_STAT:INGR_INT_STATUS

Parent: IP_1588:INGR_IP_1588_CFG_STAT

Instances: 1

Status sticky conditions for the 1588 IP

Table 154 • **Fields in INGR_INT_STATUS**

Field Name	Bit	Access	Description	Default
INGR_ANALYZER_ERROR_STICKY	6	Sticky	Indicates that more than one engine has produced a match 0: No error found 1: Duplicate match found	0x0
INGR_RW_PREAMBLE_ERR_STICKY	5	Sticky	When set, indicates that a preamble that was too short to modify was detected in a PTP frame. Write to 1 to clear. This occurs when the rewriter needs to shrink the preamble to append a timestamp but cannot because the preamble is too short. A short preamble is any preamble that is less than eight characters long including the XGMII /S/ character and the ending SFD of 0xD5. Other preamble values are not checked, only the GMII length. 0: No error 1: Preamble too short error	0x0
INGR_RW_FCS_ERR_STICKY	4	Sticky	When set, indicates that an FCS error was detected in a PTP/OAM frame. Write to 1 to clear. 0: No error 1: FCS error	0x0
INGR_TS_LEVEL_STICKY	3	Sticky	When set, indicates that the level in the Timestamp FIFO has reached the threshold TS_THRESH. The sticky bit should be reset by writing it to 1. 0: No overflow 1: Overflow	0x0

Table 154 • **Fields in INGR_INT_STATUS *(continued)***

Field Name	Bit	Access	Description	Default
INGR_TS_LOADED_STICKY	2	Sticky	When set, indicates a timestamp was captured in the Timestamp FIFO. The sticky bit should be reset by writing it to 1. 0: No overflow 1: Overflow	0x0
INGR_TS_UNDERFLOW_STICKY	1	Sticky	When set, indicates an underflow in the Timestamp FIFO. The sticky bit should be reset by writing it to 1. 0: No overflow 1: Overflow	0x0
INGR_TS_OVERFLOW_STICKY	0	Sticky	When set, indicates an overflow in the Timestamp FIFO. The sticky bit should be reset by writing it to 1. 0: No overflow 1: Overflow	0x0

4.8.7.2 IP_1588:INGR_IP_1588_CFG_STAT:INGR_INT_MASK

Parent: IP_1588:INGR_IP_1588_CFG_STAT

Instances: 1

Masks that enable and disable the interrupts

Table 155 • **Fields in INGR_INT_MASK**

Field Name	Bit	Access	Description	Default
INGR_ANALYZER_ERROR_MASK	6	R/W	Mask bit for ANALYZER_ERROR_STICKY bit 0: Interrupt disabled 1: Interrupt enabled	0x0
INGR_RW_PREAMBLE_ERR_MASK	5	R/W	Mask for the RW_PREAMBLE_ERR_STICKY bit 0: Interrupt disabled 1: Interrupt enabled	0x0
INGR_RW_FCS_ERR_MASK	4	R/W	Mask for the RW_FCS_ERR_STICKY bit 0: Interrupt disabled 1: Interrupt enabled	0x0
INGR_TS_LEVEL_MASK	3	R/W	Mask bit for TS_LEVEL_STICKY. When 1, the interrupt is enabled. 0: Interrupt disabled 1: Interrupt enabled	0x0
INGR_TS_LOADED_MASK	2	R/W	Mask bit for TS_LOADED_STICKY. When 1, the interrupt is enabled. 0: Interrupt disabled 1: Interrupt enabled	0x0
INGR_TS_UNDERFLOW_MASK	1	R/W	Mask bit for TS_UNDERFLOW_STICKY. When 1, the interrupt is enabled. 0: Interrupt disabled 1: Interrupt enabled	0x0

Table 155 • **Fields in INGR_INT_MASK *(continued)***

Field Name	Bit	Access	Description	Default
INGR_TS_OVERFLOW_MASK	0	R/W	Mask bit for TS_OVERFLOW_STICKY. When 1, the interrupt is enabled. 0: Interrupt disabled 1: Interrupt enabled	0x0

4.8.7.3 IP_1588:INGR_IP_1588_CFG_STAT:INGR_SPARE_REGISTER

Parent: IP_1588:INGR_IP_1588_CFG_STAT

Instances: 1

Table 156 • **Fields in INGR_SPARE_REGISTER**

Field Name	Bit	Access	Description	Default
INGR_SPARE_REGISTER	31:0	R/W	Spare scratchpad register	0x00000000

4.8.8 IP_1588:INGR_IP_1588_TSP

Parent:

Instances: 1

Configuration and status register set for the IEEE1588 timestamp processor

Table 157 • **Registers in INGR_IP_1588_TSP**

Register Name	Offset within Register Group	Instances and Address Spacing	Description	Details
INGR_TSP_CTRL	0x00000000	1	TSP control	Page 156
INGR_TSP_STAT	0x00000004	1	TSP status	Page 157
INGR_LOCAL_LATENCY	0x00000008	1	Local latency	Page 157
INGR_PATH_DELAY	0x0000000C	1	Path delay	Page 157
INGR_DELAY_ASYMMETRY	0x00000010	1	Delay asymmetry	Page 158

4.8.8.1 IP_1588:INGR_IP_1588_TSP:INGR_TSP_CTRL

Parent: IP_1588:INGR_IP_1588_TSP

Instances: 1

Table 158 • **Fields in INGR_TSP_CTRL**

Field Name	Bit	Access	Description	Default
INGR_FRACT_NS_MODE	2	R/W	Selects a mode in which the fractional portion of a second (in units of nanoseconds) is used for timestamping. Only the operation of the WRITE_NS, WRITE_NS_P2P, and SUB_ADD PTP commands are affected by the setting of this mode bit. 0: Select the total (summed) nanoseconds for timestamping 1: Select the fractional portion in nanoseconds for timestamping	0x0
INGR_SEL_EXT_SOF_IND	1	R/W	Select external pin start of frame indicator 0: Select internal PCS as the source of SOF 1: Select external pin as the source of SOF	0x0
INGR_LOAD_DELAYS	0	One-shot	One-shot loads local latency, path delay, and DelayAsymmetry values into the timestamp processor	0x0

4.8.8.2 IP_1588:INGR_IP_1588_TSP:INGR_TSP_STAT

Parent: IP_1588:INGR_IP_1588_TSP

Instances: 1

Table 159 • **Fields in INGR_TSP_STAT**

Field Name	Bit	Access	Description	Default
INGR_CF_TOO_BIG_STICKY	0	Sticky	Timestamp processor marked a calculated correction field as too big 0: A calculated correction field that was too big did occur 1: A calculated correction field that was too big did not occur	0x0

4.8.8.3 IP_1588:INGR_IP_1588_TSP:INGR_LOCAL_LATENCY

Parent: IP_1588:INGR_IP_1588_TSP

Instances: 1

Table 160 • **Fields in INGR_LOCAL_LATENCY**

Field Name	Bit	Access	Description	Default
INGR_LOCAL_LATENCY	15:0	R/W	Local latency (nanoseconds)	0x0000

4.8.8.4 IP_1588:INGR_IP_1588_TSP:INGR_PATH_DELAY

Parent: IP_1588:INGR_IP_1588_TSP

Instances: 1

Table 161 • **Fields in INGR_PATH_DELAY**

Field Name	Bit	Access	Description	Default
INGR_PATH_DELAY	31:0	R/W	Path delay (nanoseconds)	0x00000000

4.8.8.5 IP_1588:INGR_IP_1588_TSP:INGR_DELAY_ASYMMETRY

Parent: IP_1588:INGR_IP_1588_TSP

Instances: 1

Table 162 • **Fields in INGR_DELAY_ASYMMETRY**

Field Name	Bit	Access	Description	Default
INGR_DELAY_ASYMMETRY	31:0	R/W	Delay asymmetry (scaled nanoseconds)	0x00000000

4.8.9 IP_1588:INGR_IP_1588_DF

Parent:

Instances: 1

Configuration for the delay FIFO in the 1588 IP block. The delay FIFO will delay the data in a pipeline governed by these settings.

Table 163 • **Registers in INGR_IP_1588_DF**

Register Name	Offset within Register Group	Instances and Address Spacing	Description	Details
INGR_DF_CTRL	0x00000000	1	Configuration and control register for the delay FIFO	Page 158

4.8.9.1 IP_1588:INGR_IP_1588_DF:INGR_DF_CTRL

Parent: IP_1588:INGR_IP_1588_DF

Instances: 1

Table 164 • **Fields in INGR_DF_CTRL**

Field Name	Bit	Access	Description	Default
INGR_DF_DEPTH	4:0	R/W	The index of the register stage in the delay FIFO that is used for output. The actual delay through the block is one more than the depth. If depth is set to 2, then the delay is 3 clocks as data is taken from stage 2. The depth MUST be greater than 0 (depth of 0 is not allowed). Binary number >= 1	0x00

4.8.10 IP_1588:INGR_IP_1588_TSFIFO

Parent:

Instances: 1

Configuration and status for the timestamp FIFO. This register is only usable if a timestamp FIFO has been instantiated in the given direction (ingress or egress).

Note: The ingress timestamp FIFO is NOT required and may not be present. In that case, the ingress registers will be unconnected.

Table 165 • **Registers in INGR_IP_1588_TSFIFO**

Register Name	Offset within Register Group	Instances and Address Spacing	Description	Details
INGR_TSFIFO_CSR	0x00000000	1	Timestamp FIFO configuration and status	Page 159
INGR_TSFIFO_0	0x00000004	1	Data value from the timestamp FIFO	Page 160
INGR_TSFIFO_1	0x00000008	1	Data value from the timestamp FIFO	Page 161
INGR_TSFIFO_2	0x0000000C	1	Data value from the timestamp FIFO	Page 161
INGR_TSFIFO_3	0x00000010	1	Data value from the timestamp FIFO	Page 161
INGR_TSFIFO_4	0x00000014	1	Data value from the timestamp FIFO	Page 162
INGR_TSFIFO_5	0x00000018	1	Data value from the timestamp FIFO	Page 162
INGR_TSFIFO_6	0x0000001C	1	Data value from the timestamp FIFO	Page 162
INGR_TSFIFO_DROP_CNT	0x00000020	1	Count of dropped timestamps	Page 162

4.8.10.1 IP_1588:INGR_IP_1588_TSFIFO:INGR_TSFIFO_CSR

Parent: IP_1588:INGR_IP_1588_TSFIFO

Instances: 1

Configuration and status register for the timestamp FIFO

Table 166 • **Fields in INGR_TSFIFO_CSR**

Field Name	Bit	Access	Description	Default
INGR_TS_4BYTES	17	R/W	Selects a smaller timestamp size to be stored in the timestamp FIFO (4 bytes vs. the default 10 bytes) 0: Full 10 byte timestamps are stored 1: Only 4 bytes of each timestamp are stored	0x0
INGR_TS_FIFO_RESET	16	R/W	Forces the TS_FIFO into the reset state	0x0

Table 166 • **Fields in INGR_TSFIFO_CSR *(continued)***

Field Name	Bit	Access	Description	Default
INGR_TS_LEVEL	15:12	R/O	The FIFO level associated with the last read of the TS_EMPTY status field of the TSFIFO_0 register Binary number (0-8)	0x0
INGR_TS_THRESH	11:8	R/W	The threshold at which the timestamp FIFO interrupt TS_LEVEL_STICKY will be set. If the FIFO level reaches the threshold, the sticky bit TS_LEVEL_STICKY will be set. Binary number (1-8)	0x3
INGR_TS_SIGNAT_BYTES	4:0	R/W	Indicates the number of signature bytes used for timestamps in the timestamp FIFO (0-16).	0x00

4.8.10.2 IP_1588:INGR_IP_1588_TSFIFO:INGR_TSFIFO_0

Parent: IP_1588:INGR_IP_1588_TSFIFO

Instances: 1

Read the data from the timestamp FIFO along with the FIFO empty flag in the MSB

Table 167 • **Fields in INGR_TSFIFO_0**

Field Name	Bit	Access	Description	Default
INGR_TS_EMPTY	31	R/O	The FIFO empty flag from the Timestamp FIFO. If this bit is set, there is no FIFO data to be read from the FIFO. The data in the TSFIFO_x registers is not valid and should be discarded. When 0, the FIFO has data and the TSFIFO_x has a valid set of data. This register can be polled and when the bit is cleared, the other registers should be read to get a full timestamp. When 1, the last data has already been read out and the current read data should be discarded. Timestamp/Frame signature bytes are packed such that the 10 or 4 byte timestamp resides in the LEAST significant bytes while the frame signature (0 to 16 bytes) resides in the MOST significant bytes. The order of the bytes within each timestamp/frame signature field is also most significant to least significant. For example, 26 byte timestamp/frame signature pairs are packed with the 10 byte timestamp field ([79:0]) corresponding to Bits 79:0 in the following registers, and a 16 byte frame signature field ([127:0]) corresponding to Bits 207:80 in the following registers. 0: FIFO not empty, data valid 1: FIFO empty, data invalid	0x1

Table 167 • **Fields in INGR_TSFIFO_0 *(continued)***

Field Name	Bit	Access	Description	Default
INGR_TS_FLAGS	30:28	R/O	FIFO flags from the timestamp FIFO. These bits indicate how many timestamps are valid in the current (not empty) 26 byte FIFO entry. 000: Only the end of a partial timestamp is valid in the current FIFO entry (any remaining data is invalid) 001: 1 valid timestamp begins in the current FIFO entry (any remaining data is invalid) 010: 2 valid timestamps begin in the current FIFO entry (any remaining data is invalid) 011: 3 valid timestamps begin in the current FIFO entry (any remaining data is invalid) 100: 4 valid timestamps begin in the current FIFO entry (any remaining data is invalid) 101: 5 valid timestamps begin in the current FIFO entry (any remaining data is invalid) 110: 6 valid timestamps begin in the current FIFO entry (any remaining data is invalid) 111: The current FIFO entry is fully packed with timestamps (all data is valid)	N/A
INGR_TSFIFO_0	15:0	R/O	16 bits from the timestamp FIFO. Bits 15:0	N/A

4.8.10.3 IP_1588:INGR_IP_1588_TSFIFO:INGR_TSFIFO_1

Parent: IP_1588:INGR_IP_1588_TSFIFO

Instances: 1

Read the data from the timestamp FIFO

Table 168 • **Fields in INGR_TSFIFO_1**

Field Name	Bit	Access	Description	Default
INGR_TSFIFO_1	31:0	R/O	32 bits from the timestamp FIFO. Bits 47:16.	N/A

4.8.10.4 IP_1588:INGR_IP_1588_TSFIFO:INGR_TSFIFO_2

Parent: IP_1588:INGR_IP_1588_TSFIFO

Instances: 1

Read the data from the timestamp FIFO

Table 169 • **Fields in INGR_TSFIFO_2**

Field Name	Bit	Access	Description	Default
INGR_TSFIFO_2	31:0	R/O	32 bits from the timestamp FIFO. Bits 79:48.	N/A

4.8.10.5 IP_1588:INGR_IP_1588_TSFIFO:INGR_TSFIFO_3

Parent: IP_1588:INGR_IP_1588_TSFIFO

Instances: 1

Read the data from the timestamp FIFO

Table 170 • **Fields in INGR_TSFIFO_3**

Field Name	Bit	Access	Description	Default
INGR_TSFIFO_3	31:0	R/O	32 bits from the timestamp FIFO. Bits 111:80.	N/A

4.8.10.6 IP_1588:INGR_IP_1588_TSFIFO:INGR_TSFIFO_4

Parent: IP_1588:INGR_IP_1588_TSFIFO

Instances: 1

Read the data from the timestamp FIFO

Table 171 • **Fields in INGR_TSFIFO_4**

Field Name	Bit	Access	Description	Default
INGR_TSFIFO_4	31:0	R/O	32 bits from the timestamp FIFO. Bits 143:112.	N/A

4.8.10.7 IP_1588:INGR_IP_1588_TSFIFO:INGR_TSFIFO_5

Parent: IP_1588:INGR_IP_1588_TSFIFO

Instances: 1

Read the data from the timestamp FIFO

Table 172 • **Fields in INGR_TSFIFO_5**

Field Name	Bit	Access	Description	Default
INGR_TSFIFO_5	31:0	R/O	32 bits from the timestamp FIFO. Bits 175:144.	N/A

4.8.10.8 IP_1588:INGR_IP_1588_TSFIFO:INGR_TSFIFO_6

Parent: IP_1588:INGR_IP_1588_TSFIFO

Instances: 1

Read the data from the timestamp FIFO

Table 173 • **Fields in INGR_TSFIFO_6**

Field Name	Bit	Access	Description	Default
INGR_TSFIFO_6	31:0	R/O	32 bits from the timestamp FIFO. Bits 207:176.	N/A

4.8.10.9 IP_1588:INGR_IP_1588_TSFIFO:INGR_TSFIFO_DROP_CNT

Parent: IP_1588:INGR_IP_1588_TSFIFO

Instances: 1

Count of dropped timestamps not enqueued to the TS FIFO

Table 174 • **Fields in INGR_TSFIFO_DROP_CNT**

Field Name	Bit	Access	Description	Default
INGR_TS_FIFO_DROP_CNT	31:0	R/W	Timestamps dropped count	0x00000000

4.8.11 IP_1588:INGR_IP_1588_RW

Parent:

Instances: 1

Configuration and status for the 1588 rewriter

Table 175 • **Registers in INGR_IP_1588_RW**

Register Name	Offset within Register Group	Instances and Address Spacing	Description	Details
INGR_RW_CTRL	0x00000000	1	Rewriter configuration and control	Page 163
INGR_RW_MODFRM_CNT	0x00000004	1	Count of modified frames	Page 164
INGR_RW_FCS_ERR_CNT	0x00000008	1	Count of FCS errors	Page 164
INGR_RW_PREAMBLE_ERR_CNT	0x0000000C	1	Count of the number of preamble errors	Page 164

4.8.11.1 IP_1588:INGR_IP_1588_RW:INGR_RW_CTRL

Parent: IP_1588:INGR_IP_1588_RW

Instances: 1

Configuration for the rewriter

Table 176 • **Fields in INGR_RW_CTRL**

Field Name	Bit	Access	Description	Default
INGR_RW_REDUCE_PREAMBLE	4	R/W	When set, the 1588 IP will reduce the preamble of ALL incoming frames by 4 bytes to allow a timestamp to be appended to the ingress data frames. This bit must be set along with the proper configuration of the Analyzer to ensure proper operation. **Note:** Valid in ingress direction only 0: No preamble modification 1: Reduce preamble by 4 bytes	0x0
INGR_RW_FLAG_VAL	3	R/W	Value to write to the flag bit when it is overwritten 0: 0 will be written to the flag bit 1: 1 will be written to the flag bit	0x0
INGR_RW_FLAG_BIT	2:0	R/W	Bit offset within a byte of the flag bit that indicates if the frame has been modified	0x0

4.8.11.2 IP_1588:INGR_IP_1588_RW:INGR_RW_MODFRM_CNT

Parent: IP_1588:INGR_IP_1588_RW

Instances: 1

Table 177 • **Fields in INGR_RW_MODFRM_CNT**

Field Name	Bit	Access	Description	Default
INGR_RW_MODFRM_CNT	31:0	R/W	Count of the number of frames modified by the 1588 IP. The counter wraps.	0x00000000

4.8.11.3 IP_1588:INGR_IP_1588_RW:INGR_RW_FCS_ERR_CNT

Parent: IP_1588:INGR_IP_1588_RW

Instances: 1

Table 178 • **Fields in INGR_RW_FCS_ERR_CNT**

Field Name	Bit	Access	Description	Default
INGR_RW_FCS_ERR_CNT	31:0	R/W	Count of the number of FCS errored frames detected by the rewriter. Counts only the FCS errored frames that are modified.	0x00000000

4.8.11.4 IP_1588:INGR_IP_1588_RW:INGR_RW_PREAMBLE_ERR_CNT

Parent: IP_1588:INGR_IP_1588_RW

Instances: 1

Table 179 • **Fields in INGR_RW_PREAMBLE_ERR_CNT**

Field Name	Bit	Access	Description	Default
INGR_RW_PREAMBLE_ERR_CNT	31:0	R/W	Count of the number of errored preambles detected. The counter wraps. An errored preamble is a preamble that is too short to shrink that is encountered when RW_REDUCE_PREAMBLE is set. Binary number	0x00000000

4.8.12 IP_1588:EGR_IP_1588_CFG_STAT

Parent:

Instances: 1

Table 180 • **Registers in EGR_IP_1588_CFG_STAT**

Register Name	Offset within Register Group	Instances and Address Spacing	Description	Details
EGR_INT_STATUS	0x00000000	1	1588 IP interrupt status register	Page 165

Table 180 • **Registers in EGR_IP_1588_CFG_STAT *(continued)***

Register Name	Offset within Register Group	Instances and Address Spacing	Description	Details
EGR_INT_MASK	0x00000004	1	1588 IP interrupt mask register	Page 166
EGR_SPARE_REGISTER	0x00000008	1	Spare scratchpad register	Page 167

4.8.12.1 IP_1588:EGR_IP_1588_CFG_STAT:EGR_INT_STATUS

Parent: IP_1588:EGR_IP_1588_CFG_STAT

Instances: 1

Status sticky conditions for the 1588 IP

Table 181 • **Fields in EGR_INT_STATUS**

Field Name	Bit	Access	Description	Default
EGR_ANALYZER_ERROR_STICKY	6	Sticky	Indicates that more than one engine has produced a match 0: No error found 1: Duplicate match found	0x0
EGR_RW_PREAMBLE_ERR_STICKY	5	Sticky	When set, indicates that a preamble that was too short to modify was detected in a PTP frame. Write to 1 to clear. This occurs when the rewriter needs to shrink the preamble to append a timestamp but cannot because the preamble is too short. A short preamble is any preamble that is less than eight characters long including the XGMII /S/ character and the ending SFD of 0xD5. Other preamble values are not checked, only the GMII length. 0: No error 1: Preamble too short error	0x0
EGR_RW_FCS_ERR_STICKY	4	Sticky	When set, indicates that an FCS error was detected in a PTP/OAM frame. Write to 1 to clear. 0: No error 1: FCS error	0x0
EGR_TS_LEVEL_STICKY	3	Sticky	When set, indicates that the level in the Timestamp FIFO has reached the threshold TS_THRESH. The sticky bit should be reset by writing it to 1. 0: No overflow 1: Overflow	0x0
EGR_TS_LOADED_STICKY	2	Sticky	When set, indicates a timestamp was captured in the Timestamp FIFO. The sticky bit should be reset by writing it to 1. 0: No overflow 1: Overflow	0x0

Table 181 • **Fields in EGR_INT_STATUS *(continued)***

Field Name	Bit	Access	Description	Default
EGR_TS_UNDERFLOW_STICKY	1	Sticky	When set, indicates an underflow in the Timestamp FIFO. The sticky bit should be reset by writing it to 1. 0: No overflow 1: Overflow	0x0
EGR_TS_OVERFLOW_STICKY	0	Sticky	When set, indicates an overflow in the Timestamp FIFO. The sticky bit should be reset by writing it to 1. 0: No overflow 1: Overflow	0x0

4.8.12.2 IP_1588:EGR_IP_1588_CFG_STAT:EGR_INT_MASK

Parent: IP_1588:EGR_IP_1588_CFG_STAT

Instances: 1

Masks that enable and disable the interrupts

Table 182 • **Fields in EGR_INT_MASK**

Field Name	Bit	Access	Description	Default
EGR_ANALYZER_ERROR_MASK	6	R/W	Mask bit for ANALYZER_ERROR_STICKY bit 0: Interrupt disabled 1: Interrupt enabled	0x0
EGR_RW_PREAMBLE_ERR_MASK	5	R/W	Mask for the RW_PREAMBLE_ERR_STICKY bit 0: Interrupt disabled 1: Interrupt enabled	0x0
EGR_RW_FCS_ERR_MASK	4	R/W	Mask for the RW_FCS_ERR_STICKY bit 0: Interrupt disabled 1: Interrupt enabled	0x0
EGR_TS_LEVEL_MASK	3	R/W	Mask bit for TS_LEVEL_STICKY. When 1, the interrupt is enabled. 0: Interrupt disabled 1: Interrupt enabled	0x0
EGR_TS_LOADED_MASK	2	R/W	Mask bit for TS_LOADED_STICKY. When 1, the interrupt is enabled. 0: Interrupt disabled 1: Interrupt enabled	0x0
EGR_TS_UNDERFLOW_MASK	1	R/W	Mask bit for TS_UNDERFLOW_STICKY. When 1, the interrupt is enabled. 0: Interrupt disabled 1: Interrupt enabled	0x0
EGR_TS_OVERFLOW_MASK	0	R/W	Mask bit for TS_OVERFLOW_STICKY. When 1, the interrupt is enabled. 0: Interrupt disabled 1: Interrupt enabled	0x0

4.8.12.3 IP_1588:EGR_IP_1588_CFG_STAT:EGR_SPARE_REGISTER

Parent: IP_1588:EGR_IP_1588_CFG_STAT

Instances: 1

Table 183 • **Fields in EGR_SPARE_REGISTER**

Field Name	Bit	Access	Description	Default
EGR_SPARE_REGISTER	31:0	R/W	Spare scratchpad register	0x00000000

4.8.13 IP_1588:EGR_IP_1588_TSP

Parent:

Instances: 1

Configuration and status register set for the IEEE1588 timestamp processor

Table 184 • **Registers in EGR_IP_1588_TSP**

Register Name	Offset within Register Group	Instances and Address Spacing	Description	Details
EGR_TSP_CTRL	0x00000000	1	TSP control	Page 167
EGR_TSP_STAT	0x00000004	1	TSP status	Page 168
EGR_LOCAL_LATENCY	0x00000008	1	Local latency	Page 168
EGR_PATH_DELAY	0x0000000C	1	Path delay	Page 168
EGR_DELAY_ASYMMETRY	0x00000010	1	Delay asymmetry	Page 168

4.8.13.1 IP_1588:EGR_IP_1588_TSP:EGR_TSP_CTRL

Parent: IP_1588:EGR_IP_1588_TSP

Instances: 1

Table 185 • **Fields in EGR_TSP_CTRL**

Field Name	Bit	Access	Description	Default
EGR_FRACT_NS_MODE	2	R/W	Selects a mode in which the fractional portion of a second (in units of nanoseconds) is used for timestamping. Only the operation of the WRITE_NS, WRITE_NS_P2P, and SUB_ADD PTP commands are affected by the setting of this mode bit. 0: Select the total (summed) nanoseconds for timestamping 1: Select the fractional portion in nanoseconds for timestamping	0x0
EGR_SEL_EXT_SOF_IND	1	R/W	Select external pin start of frame indicator 0: Select internal PCS as the source of SOF 1: Select external pin as the source of SOF	0x0

Table 185 • **Fields in EGR_TSP_CTRL *(continued)***

Field Name	Bit	Access	Description	Default
EGR_LOAD_DELAYS	0	One-shot	One-shot loads local latency, path delay, and DelayAsymmetry values into the timestamp processor	0x0

4.8.13.2 IP_1588:EGR_IP_1588_TSP:EGR_TSP_STAT

Parent: IP_1588:EGR_IP_1588_TSP

Instances: 1

Table 186 • **Fields in EGR_TSP_STAT**

Field Name	Bit	Access	Description	Default
EGR_CF_TOO_BIG_STICKY	0	Sticky	Timestamp processor marked a calculated correction field as too big 0: A calculated correction field that was too big did occur 1: A calculated correction field that was too big did not occur	0x0

4.8.13.3 IP_1588:EGR_IP_1588_TSP:EGR_LOCAL_LATENCY

Parent: IP_1588:EGR_IP_1588_TSP

Instances: 1

Table 187 • **Fields in EGR_LOCAL_LATENCY**

Field Name	Bit	Access	Description	Default
EGR_LOCAL_LATENCY	15:0	R/W	Local latency (nanoseconds)	0x0000

4.8.13.4 IP_1588:EGR_IP_1588_TSP:EGR_PATH_DELAY

Parent: IP_1588:EGR_IP_1588_TSP

Instances: 1

Table 188 • **Fields in EGR_PATH_DELAY**

Field Name	Bit	Access	Description	Default
EGR_PATH_DELAY	31:0	R/W	Path delay (nanoseconds)	0x00000000

4.8.13.5 IP_1588:EGR_IP_1588_TSP:EGR_DELAY_ASYMMETRY

Parent: IP_1588:EGR_IP_1588_TSP

Instances: 1

Table 189 • **Fields in EGR_DELAY_ASYMMETRY**

Field Name	Bit	Access	Description	Default
EGR_DELAY_ASYMMETRY	31:0	R/W	Delay asymmetry (scaled nanoseconds)	0x00000000

4.8.14 IP_1588:EGR_IP_1588_DF

Parent:

Instances: 1

Configuration for the delay FIFO in the 1588 IP block. The delay FIFO will delay the data in a pipeline governed by these settings.

Table 190 • **Registers in EGR_IP_1588_DF**

Register Name	Offset within Register Group	Instances and Address Spacing	Description	Details
EGR_DF_CTRL	0x00000000	1	Configuration and control register for the delay FIFO	Page 169

4.8.14.1 IP_1588:EGR_IP_1588_DF:EGR_DF_CTRL

Parent: IP_1588:EGR_IP_1588_DF

Instances: 1

Table 191 • **Fields in EGR_DF_CTRL**

Field Name	Bit	Access	Description	Default
EGR_DF_DEPTH	4:0	R/W	The index of the register stage in the delay FIFO that is used for output. The actual delay through the block is one more than the depth. If depth is set to 2, then the delay is 3 clocks as data is taken from stage 2. The depth MUST be greater than 0 (depth of 0 is not allowed). Binary number >= 1	0x00

4.8.15 IP_1588:EGR_IP_1588_TSFIFO

Parent:

Instances: 1

Configuration and status for the timestamp FIFO. This register is only usable if a timestamp FIFO has been instantiated in the given direction (ingress or egress).

Note: The ingress timestamp FIFO is NOT required and may not be present. In that case, the ingress registers will be unconnected.

Table 192 • **Registers in EGR_IP_1588_TSFIFO**

Register Name	Offset within Register Group	Instances and Address Spacing	Description	Details
EGR_TSFIFO_CSR	0x00000000	1	Timestamp FIFO configuration and status	Page 170
EGR_TSFIFO_0	0x00000004	1	Data value from the timestamp FIFO	Page 171
EGR_TSFIFO_1	0x00000008	1	Data value from the timestamp FIFO	Page 172
EGR_TSFIFO_2	0x0000000C	1	Data value from the timestamp FIFO	Page 172
EGR_TSFIFO_3	0x00000010	1	Data value from the timestamp FIFO	Page 172
EGR_TSFIFO_4	0x00000014	1	Data value from the timestamp FIFO	Page 173
EGR_TSFIFO_5	0x00000018	1	Data value from the timestamp FIFO	Page 173
EGR_TSFIFO_6	0x0000001C	1	Data value from the timestamp FIFO	Page 173
EGR_TSFIFO_DROP_CNT	0x00000020	1	Count of dropped timestamps	Page 173

4.8.15.1 IP_1588:EGR_IP_1588_TSFIFO:EGR_TSFIFO_CSR

Parent: IP_1588:EGR_IP_1588_TSFIFO

Instances: 1

Configuration and status register for the timestamp FIFO

Table 193 • **Fields in EGR_TSFIFO_CSR**

Field Name	Bit	Access	Description	Default
EGR_TS_4BYTES	17	R/W	Selects a smaller timestamp size to be stored in the timestamp FIFO (4 bytes vs. the default 10 bytes) 0: Full 10 byte timestamps are stored 1: Only 4 bytes of each timestamp are stored	0x0
EGR_TS_FIFO_RESET	16	R/W	Forces the TS_FIFO into the reset state	0x0
EGR_TS_LEVEL	15:12	R/O	The FIFO level associated with the last read of the TS_EMPTY status field of the TSFIFO_0 register Binary number (0-8)	0x0
EGR_TS_THRESH	11:8	R/W	The threshold at which the timestamp FIFO interrupt TS_LEVEL_STICKY will be set. If the FIFO level reaches the threshold, the sticky bit TS_LEVEL_STICKY will be set. Binary number (1-8)	0x3

Table 193 • **Fields in EGR_TSFIFO_CSR *(continued)***

Field Name	Bit	Access	Description	Default
EGR_TS_SIGNAT_BYTES	4:0	R/W	Indicates the number of signature bytes used for timestamps in the timestamp FIFO (0-16).	0x00

4.8.15.2 IP_1588:EGR_IP_1588_TSFIFO:EGR_TSFIFO_0

Parent: IP_1588:EGR_IP_1588_TSFIFO

Instances: 1

Read the data from the timestamp FIFO along with the FIFO empty flag in the MSB

Table 194 • **Fields in EGR_TSFIFO_0**

Field Name	Bit	Access	Description	Default
EGR_TS_EMPTY	31	R/O	The FIFO empty flag from the Timestamp FIFO. If this bit is set, there is no FIFO data to be read from the FIFO. The data in the TSFIFO_x registers is not valid and should be discarded. When 0, the FIFO has data and the TSFIFO_x has a valid set of data. This register can be polled and when the bit is cleared, the other registers should be read to get a full timestamp. When 1, the last data has already been read out and the current read data should be discarded. Timestamp/Frame signature bytes are packed such that the 10 or 4 byte timestamp resides in the LEAST significant bytes while the frame signature (0 to 16 bytes) resides in the MOST significant bytes. The order of the bytes within each timestamp/frame signature field is also most significant to least significant. For example, 26 byte timestamp/frame signature pairs are packed with the 10 byte timestamp field ([79:0]) corresponding to Bits 79:0 in the following registers, and a 16 byte frame signature field ([127:0]) corresponding to Bits 207:80 in the following registers. 0: FIFO not empty, data valid 1: FIFO empty, data invalid	0x1

Table 194 • **Fields in EGR_TSFIFO_0 *(continued)***

Field Name	Bit	Access	Description	Default
EGR_TS_FLAGS	30:28	R/O	FIFO flags from the timestamp FIFO. These bits indicate how many timestamps are valid in the current (not empty) 26 byte FIFO entry. 000: Only the end of a partial timestamp is valid in the current FIFO entry (any remaining data is invalid) 001: 1 valid timestamp begins in the current FIFO entry (any remaining data is invalid) 010: 2 valid timestamps begin in the current FIFO entry (any remaining data is invalid) 011: 3 valid timestamps begin in the current FIFO entry (any remaining data is invalid) 100: 4 valid timestamps begin in the current FIFO entry (any remaining data is invalid) 101: 5 valid timestamps begin in the current FIFO entry (any remaining data is invalid) 110: 6 valid timestamps begin in the current FIFO entry (any remaining data is invalid) 111: The current FIFO entry is fully packed with timestamps (all data is valid)	N/A
EGR_TSFIFO_0	15:0	R/O	16 bits from the timestamp FIFO. Bits 15:0	N/A

4.8.15.3 IP_1588:EGR_IP_1588_TSFIFO:EGR_TSFIFO_1

Parent: IP_1588:EGR_IP_1588_TSFIFO

Instances: 1

Read the data from the timestamp FIFO

Table 195 • **Fields in EGR_TSFIFO_1**

Field Name	Bit	Access	Description	Default
EGR_TSFIFO_1	31:0	R/O	32 bits from the timestamp FIFO. Bits 47:16.	N/A

4.8.15.4 IP_1588:EGR_IP_1588_TSFIFO:EGR_TSFIFO_2

Parent: IP_1588:EGR_IP_1588_TSFIFO

Instances: 1

Read the data from the timestamp FIFO

Table 196 • **Fields in EGR_TSFIFO_2**

Field Name	Bit	Access	Description	Default
EGR_TSFIFO_2	31:0	R/O	32 bits from the timestamp FIFO. Bits 79:48.	N/A

4.8.15.5 IP_1588:EGR_IP_1588_TSFIFO:EGR_TSFIFO_3

Parent: IP_1588:EGR_IP_1588_TSFIFO

Instances: 1

Read the data from the timestamp FIFO

Table 197 • **Fields in EGR_TSFIFO_3**

Field Name	Bit	Access	Description	Default
EGR_TSFIFO_3	31:0	R/O	32 bits from the timestamp FIFO. Bits 111:80.	N/A

4.8.15.6 IP_1588:EGR_IP_1588_TSFIFO:EGR_TSFIFO_4

Parent: IP_1588:EGR_IP_1588_TSFIFO

Instances: 1

Read the data from the timestamp FIFO

Table 198 • **Fields in EGR_TSFIFO_4**

Field Name	Bit	Access	Description	Default
EGR_TSFIFO_4	31:0	R/O	32 bits from the timestamp FIFO. Bits 143:112.	N/A

4.8.15.7 IP_1588:EGR_IP_1588_TSFIFO:EGR_TSFIFO_5

Parent: IP_1588:EGR_IP_1588_TSFIFO

Instances: 1

Read the data from the timestamp FIFO

Table 199 • **Fields in EGR_TSFIFO_5**

Field Name	Bit	Access	Description	Default
EGR_TSFIFO_5	31:0	R/O	32 bits from the timestamp FIFO. Bits 175:144.	N/A

4.8.15.8 IP_1588:EGR_IP_1588_TSFIFO:EGR_TSFIFO_6

Parent: IP_1588:EGR_IP_1588_TSFIFO

Instances: 1

Read the data from the timestamp FIFO

Table 200 • **Fields in EGR_TSFIFO_6**

Field Name	Bit	Access	Description	Default
EGR_TSFIFO_6	31:0	R/O	32 bits from the timestamp FIFO. Bits 207:176.	N/A

4.8.15.9 IP_1588:EGR_IP_1588_TSFIFO:EGR_TSFIFO_DROP_CNT

Parent: IP_1588:EGR_IP_1588_TSFIFO

Instances: 1

Count of dropped timestamps not enqueued to the TS FIFO

Table 201 • **Fields in EGR_TSFIFO_DROP_CNT**

Field Name	Bit	Access	Description	Default
EGR_TS_FIFO_DROP_CNT	31:0	R/W	Timestamps dropped count	0x00000000

4.8.16 IP_1588:EGR_IP_1588_RW

Parent:

Instances: 1

Configuration and status for the 1588 rewriter

Table 202 • **Registers in EGR_IP_1588_RW**

Register Name	Offset within Register Group	Instances and Address Spacing	Description	Details
EGR_RW_CTRL	0x00000000	1	Rewriter configuration and control	Page 174
EGR_RW_MODFRM_CNT	0x00000004	1	Count of modified frames	Page 175
EGR_RW_FCS_ERR_CNT	0x00000008	1	Count of FCS errors	Page 175
EGR_RW_PREAMBLE_ERR_CNT	0x0000000C	1	Count of the number of preamble errors	Page 175

4.8.16.1 IP_1588:EGR_IP_1588_RW:EGR_RW_CTRL

Parent: IP_1588:EGR_IP_1588_RW

Instances: 1

Configuration for the rewriter

Table 203 • **Fields in EGR_RW_CTRL**

Field Name	Bit	Access	Description	Default
EGR_RW_REDUCE_PREAMBLE	4	R/W	When set, the 1588 IP will reduce the preamble of ALL incoming frames by 4 bytes to allow a timestamp to be appended to the ingress data frames. This bit must be set along with the proper configuration of the Analyzer to ensure proper operation. **Note:** Valid in ingress direction only 0: No preamble modification 1: Reduce preamble by 4 bytes	0x0
EGR_RW_FLAG_VAL	3	R/W	Value to write to the flag bit when it is overwritten 0: 0 will be written to the flag bit 1: 1 will be written to the flag bit	0x0
EGR_RW_FLAG_BIT	2:0	R/W	Bit offset within a byte of the flag bit that indicates if the frame has been modified	0x0

4.8.16.2 IP_1588:EGR_IP_1588_RW:EGR_RW_MODFRM_CNT

Parent: IP_1588:EGR_IP_1588_RW

Instances: 1

Table 204 • **Fields in EGR_RW_MODFRM_CNT**

Field Name	Bit	Access	Description	Default
EGR_RW_MODFRM_CNT	31:0	R/W	Count of the number of frames modified by the 1588 IP. The counter wraps.	0x00000000

4.8.16.3 IP_1588:EGR_IP_1588_RW:EGR_RW_FCS_ERR_CNT

Parent: IP_1588:EGR_IP_1588_RW

Instances: 1

Table 205 • **Fields in EGR_RW_FCS_ERR_CNT**

Field Name	Bit	Access	Description	Default
EGR_RW_FCS_ERR_CNT	31:0	R/W	Count of the number of FCS errored frames detected by the rewriter. Counts only the FCS errored frames that are modified.	0x00000000

4.8.16.4 IP_1588:EGR_IP_1588_RW:EGR_RW_PREAMBLE_ERR_CNT

Parent: IP_1588:EGR_IP_1588_RW

Instances: 1

Table 206 • **Fields in EGR_RW_PREAMBLE_ERR_CNT**

Field Name	Bit	Access	Description	Default
EGR_RW_PREAMBLE_ERR_CNT	31:0	R/W	Count of the number of errored preambles detected. The counter wraps. An errored preamble is a preamble that is too short to shrink that is encountered when RW_REDUCE_PREAMBLE is set. Binary number	0x00000000

4.9 Egress0 Ethernet Comparator

Table 207 • **Register Groups in Egress0 Ethernet Comparator**

Register Group Name	Offset within Target	Instances and Address Spacing	Description	Details
EGR0_ETH1_NXT_PROTOCOL	0x00000000	1	Ethernet next protocol configuration	Page 176
EGR0_ETH1_FLOW_CFG	0x00000040	8 0x00000040	Ethernet flow configuration	Page 178

Table 207 • **Register Groups in Egress0 Ethernet Comparator *(continued)***

Register Group Name	Offset within Target	Instances and Address Spacing	Description	Details
EGR0_ETH2_NXT_PROTOCOL	0x00000240	1	Ethernet next protocol configuration	Page 181
EGR0_ETH2_FLOW_CFG	0x00000280	8 0x00000040	Ethernet flow configuration	Page 183
EGR0_MPLS_NXT_COMPARATOR	0x00000480	1	MPLS next protocol register	Page 186
EGR0_MPLS_FLOW_CFG	0x000004C0	8 0x00000040	MPLS flow configuration	Page 187
EGR0_IP1_NXT_PROTOCOL	0x000006C0	1	IP1 next protocol	Page 190
EGR0_IP1_FLOW_CFG	0x00000700	8 0x00000040	IP1 flow configuration	Page 194
EGR0_IP2_NXT_PROTOCOL	0x00000900	1	IP2 next protocol	Page 197
EGR0_IP2_FLOW_CFG	0x00000940	8 0x00000040	IP2 flow configuration	Page 201
EGR0_PTP_FLOW	0x00000B40	6 0x00000040	PTP flow configuration	Page 204
EGR0_PTP_IP_CHKSUM_CTL	0x00000CC0	1	IP checksum field control	Page 208
EGR0_FRAME_SIG_CFG	0x00000CC4	1	Frame signature builder configuration	Page 209

4.9.1 ETHERNET_COMPARATOR:EGR0_ETH1_NXT_PROTOCOL

Parent: Egress0 Ethernet Comparator

Instances: 1

Table 208 • **Registers in EGR0_ETH1_NXT_PROTOCOL**

Register Name	Offset within Register Group	Instances and Address Spacing	Description	Details
EGR0_ETH1_NXT_PROTOCOL	0x00000000	1	Ethernet next protocol register	Page 176
EGR0_ETH1_VLAN_TPID_CFG	0x00000004	1	VLAN TPID configuration	Page 177
EGR0_ETH1_TAG_MODE	0x00000008	1	Ethernet tag mode	Page 177
EGR0_ETH1_ETYPE_MATCH	0x0000000C	1	Ethertype match register	Page 177

4.9.1.1 ETHERNET_COMPARATOR:EGR0_ETH1_NXT_PROTOCOL:EGR0_ETH1_NXT_PROTOCOL

Parent: ETHERNET_COMPARATOR:EGR0_ETH1_NXT_PROTOCOL

Instances: 1

Table 209 • **Fields in EGR0_ETH1_NXT_PROTOCOL**

Field Name	Bit	Access	Description	Default
EGR0_ETH1_FRAME_SIG_OFFSET	20:16	R/W	Frame signature offset. Points to the start of the byte field in the Ethernet frame that will be used for the frame signature.	0x00
EGR0_ETH1_NXT_COMPARATOR	2:0	R/W	Points to the next comparator block after this Ethernet block 0: Reserved 1: Ethernet comparator 2 2: IP/UDP/ACH comparator 1 3: IP/UDP/ACH comparator 2 4: MPLS comparator 5: PTP/OAM comparator 6,7: Reserved	0x0

4.9.1.2 ETHERNET_COMPARATOR:EGR0_ETH1_NXT_PROTOCOL:EGR0_ETH1_VLAN_TPID_CFG

Parent: ETHERNET_COMPARATOR:EGR0_ETH1_NXT_PROTOCOL

Instances: 1

Table 210 • **Fields in EGR0_ETH1_VLAN_TPID_CFG**

Field Name	Bit	Access	Description	Default
EGR0_ETH1_VLAN_TPID_CFG	31:16	R/W	Configurable VLAN TPID (S or B-tag)	0x88A8

4.9.1.3 ETHERNET_COMPARATOR:EGR0_ETH1_NXT_PROTOCOL:EGR0_ETH1_TAG_MODE

Parent: ETHERNET_COMPARATOR:EGR0_ETH1_NXT_PROTOCOL

Instances: 1

Table 211 • **Fields in EGR0_ETH1_TAG_MODE**

Field Name	Bit	Access	Description	Default
EGR0_ETH1_PBB_ENA	0	R/W	This bit enables the presence of PBB. The I-tag match bits are programmed in the ETH1_VLAN_TAG_RANGE registers. The mask bits are programmed in the ETH1_VLAN_TAG2 registers. A B-tag if present is configured in the ETH1_VLAN_TAG1 registers. 0: PBB not enabled 1: Always expect PBB, last tag is always an I-tag	0x0

4.9.1.4 ETHERNET_COMPARATOR:EGR0_ETH1_NXT_PROTOCOL:EGR0_ETH1_ETYPE_MATCH

Parent: ETHERNET_COMPARATOR:EGR0_ETH1_NXT_PROTOCOL

Instances: 1

Table 212 • **Fields in EGR0_ETH1_ETYPE_MATCH**

Field Name	Bit	Access	Description	Default
EGR0_ETH1_ETYPE_MATCH	15:0	R/W	If the Ethertype/length field is an Ethertype, then this register is compared against the value. If the field is a length, the length value is not checked.	0x0000

4.9.2 ETHERNET_COMPARATOR:EGR0_ETH1_FLOW_CFG

Parent: Egress0 Ethernet Comparator

Instances: 8

Table 213 • **Registers in EGR0_ETH1_FLOW_CFG**

Register Name	Offset within Register Group	Instances and Address Spacing	Description	Details
EGR0_ETH1_FLOW_ENABLE	0x00000000	1	Ethernet flow enable	Page 178
EGR0_ETH1_MATCH_MODE	0x00000004	1	Ethernet protocol match mode	Page 179
EGR0_ETH1_ADDR_MATCH_1	0x00000008	1	Ethernet address match part 1	Page 180
EGR0_ETH1_ADDR_MATCH_2	0x0000000C	1	Ethernet address match part 2	Page 180
EGR0_ETH1_VLAN_TAG_RANGE_I_TAG	0x00000010	1	Ethernet VLAN tag range match register	Page 180
EGR0_ETH1_VLAN_TAG1	0x00000014	1	VLAN tag 1 match/mask	Page 181
EGR0_ETH1_VLAN_TAG2_I_TAG	0x00000018	1	Match/mask for VLAN tag 2 or I-tag match	Page 181

4.9.2.1 ETHERNET_COMPARATOR:EGR0_ETH1_FLOW_CFG:EGR0_ETH1_FLOW_ENABLE

Parent: ETHERNET_COMPARATOR:EGR0_ETH1_FLOW_CFG

Instances: 1

Table 214 • **Fields in EGR0_ETH1_FLOW_ENABLE**

Field Name	Bit	Access	Description	Default
EGR0_ETH1_CHANNEL_MASK	9:8	R/W	Channel mask 0x0: Flow invalid 0x1: Flow valid for channel 0 0x2: Flow valid for channel 1 0x3: Flow valid for both channels	0x3
EGR0_ETH1_FLOW_ENABLE	0	R/W	Flow enable 0: Flow disabled 1: Flow enabled	0x0

4.9.2.2 ETHERNET_COMPARATOR:EGR0_ETH1_FLOW_CFG:EGR0_ETH1_MATCH_MODE

Parent: ETHERNET_COMPARATOR:EGR0_ETH1_FLOW_CFG

Instances: 1

Table 215 • **Fields in EGR0_ETH1_MATCH_MODE**

Field Name	Bit	Access	Description	Default
EGR0_ETH1_VLAN_TAG_MODE	13:12	R/W	VLAN tag mode configuration 0: VLAN range checking disabled 1: VLAN range checking on tag 1 2: VLAN range checking on tag 2 (not supported with PBB) 3: Reserved	0x0
EGR0_ETH1_VLAN_TAG2_TYPE	9	R/W	VLAN tag2 type This register is only used if ETH1_VLAN_VERIFY_ENA = 1 If PBB not enabled: 0: C tag (TPID of 0x8100) 1: S tag (match to CONF_VLAN_TPID) If PBB enabled: 0,1: I tag (use range registers)	0x1
EGR0_ETH1_VLAN_TAG1_TYPE	8	R/W	VLAN tag1 type This register is only used if ETH1_VLAN_VERIFY_ENA = 1 0: C tag (TPID of 0x8100) 1: S or B tag (match to CONF_VLAN_TPID)	0x0
EGR0_ETH1_VLAN_TAGS	7:6	R/W	VLAN tags This register is only used if ETH1_VLAN_VERIFY_ENA = 1 0: No VLAN tags (not valid for PBB) 1: 1 VLAN tag (for PBB this would be the I-tag) 2: 2 VLAN tags (for PBB expect a B-tag and an I-tag) 3: Reserved	0x0
EGR0_ETH1_VLAN_VERIFY_ENA	4	R/W	Verify VLAN tags 0: Parse for VLAN tags, do not check values. For PBB the I-tag is always checked. 1: Verify configured VLAN tag configuration.	0x0
EGR0_ETH1_ETHERTYPE_MODE	0	R/W	VLAN tag verification configuration When checking for presence of SNAP/LLC based upon ETH1_MATCH_MODE, this field indicates if SNAP and 3-byte LLC is expected to be present. 0: Only Ethernet type II supported, no SNAP/LLC 1: Ethernet type II and Ethernet type I with SNAP/LLC, determine if SNAP/LLC is present or not. Type I always assumes that SNAP/LLC is present.	0x0

4.9.2.3 ETHERNET_COMPARATOR:EGR0_ETH1_FLOW_CFG:EGR0_ETH1_ADDR_MATCH_1

Parent: ETHERNET_COMPARATOR:EGR0_ETH1_FLOW_CFG

Instances: 1

Table 216 • **Fields in EGR0_ETH1_ADDR_MATCH_1**

Field Name	Bit	Access	Description	Default
EGR0_ETH1_ADDR_MATCH_1	31:0	R/W	First 32 bits of the address match value	0x00000000

4.9.2.4 ETHERNET_COMPARATOR:EGR0_ETH1_FLOW_CFG:EGR0_ETH1_ADDR_MATCH_2

Parent: ETHERNET_COMPARATOR:EGR0_ETH1_FLOW_CFG

Instances: 1

Table 217 • **Fields in EGR0_ETH1_ADDR_MATCH_2**

Field Name	Bit	Access	Description	Default
EGR0_ETH1_ADDR_MATCH_MODE	22:20	R/W	Selects how the addresses are matched. One-hot encoded. Multiple bits can be set at once. 0: Full 48-bit address match 1: Match any unicast address 2: Match any mulitcast address	0x1
EGR0_ETH1_ADDR_MATCH_SELECT	17:16	R/W	Selects which address to match 0: Match the destination address 1: Match the source address 2: Match either the source of destination address 3: Reserved	0x0
EGR0_ETH1_ADDR_MATCH_2	15:0	R/W	Last 16 bits of the Ethernet address match field	0x0000

4.9.2.5 ETHERNET_COMPARATOR:EGR0_ETH1_FLOW_CFG:EGR0_ETH1_VLAN_TAG_RANGE_I_TAG

Parent: ETHERNET_COMPARATOR:EGR0_ETH1_FLOW_CFG

Instances: 1

Table 218 • **Fields in EGR0_ETH1_VLAN_TAG_RANGE_I_TAG**

Field Name	Bit	Access	Description	Default
EGR0_ETH1_VLAN_TAG_RANGE_UPPER	27:16	R/W	If PBB mode is not enabled, then this register contains the upper range of the VLAN tag range match. If PBB mode is enabled, then this register contains the upper 12 bits of the I-tag.	0xFFF

Table 218 • **Fields in EGR0_ETH1_VLAN_TAG_RANGE_I_TAG *(continued)***

Field Name	Bit	Access	Description	Default
EGR0_ETH1_VLAN_TAG_RANGE_LOWER	11:0	R/W	If PBB mode is not enabled, then this register contains the lower range of the VLAN tag range match. If PBB mode is enabled, then this register contains the lower 12 bits of the I-tag.	0x000

4.9.2.6 ETHERNET_COMPARATOR:EGR0_ETH1_FLOW_CFG:EGR0_ETH1_VLAN_TAG1

Parent: ETHERNET_COMPARATOR:EGR0_ETH1_FLOW_CFG

Instances: 1

Table 219 • **Fields in EGR0_ETH1_VLAN_TAG1**

Field Name	Bit	Access	Description	Default
EGR0_ETH1_VLAN_TAG1_MASK	27:16	R/W	Mask value for VLAN tag 1	0xFFF
EGR0_ETH1_VLAN_TAG1_MATCH	11:0	R/W	Match value for the first VLAN tag	0x000

4.9.2.7 ETHERNET_COMPARATOR:EGR0_ETH1_FLOW_CFG:EGR0_ETH1_VLAN_TAG2_I_TAG

Parent: ETHERNET_COMPARATOR:EGR0_ETH1_FLOW_CFG

Instances: 1

Table 220 • **Fields in EGR0_ETH1_VLAN_TAG2_I_TAG**

Field Name	Bit	Access	Description	Default
EGR0_ETH1_VLAN_TAG2_MASK	27:16	R/W	When PBB is not enabled, the mask field for VLAN tag 2. When PBB is enabled, the upper 12 bits of the I-tag mask.	0xFFF
EGR0_ETH1_VLAN_TAG2_MATCH	11:0	R/W	When PBB is not enabled, the match field for VLAN Tag 2. When PBB is enabled, the lower 12 bits of the I-tag mask field.	0x000

4.9.3 ETHERNET_COMPARATOR:EGR0_ETH2_NXT_PROTOCOL

Parent: Egress0 Ethernet Comparator

Instances: 1

Table 221 • **Registers in EGR0_ETH2_NXT_PROTOCOL**

Register Name	Offset within Register Group	Instances and Address Spacing	Description	Details
EGR0_ETH2_NXT_PROTOCOL	0x00000000	1	Ethernet next protocol register	Page 182
EGR0_ETH2_VLAN_TPID_CFG	0x00000004	1	VLAN TPID configuration	Page 182
EGR0_ETH2_ETYPE_MATCH	0x00000008	1	Ethertype match register	Page 182

4.9.3.1 ETHERNET_COMPARATOR:EGR0_ETH2_NXT_PROTOCOL:EGR0_ETH2_NXT_PROTOCOL

Parent: ETHERNET_COMPARATOR:EGR0_ETH2_NXT_PROTOCOL

Instances: 1

Table 222 • **Fields in EGR0_ETH2_NXT_PROTOCOL**

Field Name	Bit	Access	Description	Default
EGR0_ETH2_FRAME_SIG_OFFSET	20:16	R/W	Frame signature offset. Points to the start of the byte field in the Ethernet frame that will be used for the frame signature.	0x00
EGR0_ETH2_NXT_COMPARATOR	2:0	R/W	Points to the next comparator block after this Ethernet block. If this comparator block is not used, this field must be set to 0. 0: Comparator block not used 1: Ethernet comparator 2 2: IP/UDP/ACH comparator 1 3: IP/UDP/ACH comparator 2 4: MPLS comparator 5: PTP/OAM comparator 6,7: Reserved	0x0

4.9.3.2 ETHERNET_COMPARATOR:EGR0_ETH2_NXT_PROTOCOL:EGR0_ETH2_VLAN_TPID_CFG

Parent: ETHERNET_COMPARATOR:EGR0_ETH2_NXT_PROTOCOL

Instances: 1

Table 223 • **Fields in EGR0_ETH2_VLAN_TPID_CFG**

Field Name	Bit	Access	Description	Default
EGR0_ETH2_VLAN_TPID_CFG	31:16	R/W	Configurable S-tag TPID	0x88A8

4.9.3.3 ETHERNET_COMPARATOR:EGR0_ETH2_NXT_PROTOCOL:EGR0_ETH2_ETYPE_MATCH

Parent: ETHERNET_COMPARATOR:EGR0_ETH2_NXT_PROTOCOL

Instances: 1

Table 224 • **Fields in EGR0_ETH2_ETYPE_MATCH**

Field Name	Bit	Access	Description	Default
EGR0_ETH2_ETYPE_MATCH	15:0	R/W	If the Ethertype/length field is an Ethertype, then this register is compared against the value. If the field is a length, the length value is not checked.	0x0000

4.9.4 ETHERNET_COMPARATOR:EGR0_ETH2_FLOW_CFG

Parent: Egress0 Ethernet Comparator

Instances: 8

Table 225 • **Registers in EGR0_ETH2_FLOW_CFG**

Register Name	Offset within Register Group	Instances and Address Spacing	Description	Details
EGR0_ETH2_FLOW_ENABLE	0x00000000	1	Ethernet flow enable	Page 183
EGR0_ETH2_MATCH_MODE	0x00000004	1	Ethernet protocol match mode	Page 184
EGR0_ETH2_ADDR_MATCH_1	0x00000008	1	Ethernet address match part 1	Page 184
EGR0_ETH2_ADDR_MATCH_2	0x0000000C	1	Ethernet address match part 2	Page 185
EGR0_ETH2_VLAN_TAG_RANGE_I_TAG	0x00000010	1	Ethernet VLAN tag range match register	Page 185
EGR0_ETH2_VLAN_TAG1	0x00000014	1	VLAN tag 1 match/mask	Page 185
EGR0_ETH2_VLAN_TAG2_I_TAG	0x00000018	1	Match/mask for VLAN tag 2 or I-tag match	Page 186

4.9.4.1 ETHERNET_COMPARATOR:EGR0_ETH2_FLOW_CFG:EGR0_ETH2_FLOW_ENABLE

Parent: ETHERNET_COMPARATOR:EGR0_ETH2_FLOW_CFG

Instances: 1

Table 226 • **Fields in EGR0_ETH2_FLOW_ENABLE**

Field Name	Bit	Access	Description	Default
EGR0_ETH2_CHANNEL_MASK	9:8	R/W	Channel mask 0x0: Flow invalid 0x1: Flow valid for channel 0 0x2: Flow valid for channel 1 0x3: Flow valid for both channels	0x3
EGR0_ETH2_FLOW_ENABLE	0	R/W	Flow enable. If this comparator block is not used, all flow enable bits must be set to 0. 0: Flow disabled 1: Flow enabled	0x0

4.9.4.2 ETHERNET_COMPARATOR:EGR0_ETH2_FLOW_CFG:EGR0_ETH2_MATCH_MODE

Parent: ETHERNET_COMPARATOR:EGR0_ETH2_FLOW_CFG

Instances: 1

Table 227 • **Fields in EGR0_ETH2_MATCH_MODE**

Field Name	Bit	Access	Description	Default
EGR0_ETH2_VLAN_TAG_MODE	13:12	R/W	VLAN tag mode configuration 0: VLAN range checking disabled 1: VLAN range checking on tag 1 2: VLAN range checking on tag 2 (not supported with PBB) 3: Reserved	0x0
EGR0_ETH2_VLAN_TAG2_TYPE	9	R/W	VLAN tag2 type This register is only used if ETH1_VLAN_VERIFY_ENA = 1 0: C tag (TPID of 0x8100) 1: S tag (match to CONF_VLAN_TPID)	0x1
EGR0_ETH2_VLAN_TAG1_TYPE	8	R/W	VLAN tag1 type This register is only used if ETH1_VLAN_VERIFY_ENA = 1 0: C tag (TPID of 0x8100) 1: S or B tag (match to CONF_VLAN_TPID)	0x0
EGR0_ETH2_VLAN_TAGS	7:6	R/W	VLAN tags This register is only used if ETH2_VLAN_VERIFY_ENA = 1 0: No VLAN tags 1: 1 VLAN tag 2: 2 VLAN tags 3: Reserved	0x0
EGR0_ETH2_VLAN_VERIFY_ENA	4	R/W	Verify VLAN tags 0: Parse for VLAN tags, do not check values. 1: Verify configured VLAN tag configuration.	0x0
EGR0_ETH2_ETHERTYPE_MODE	0	R/W	VLAN tag verification configuration When checking for presence of SNAP/LLC based upon ETH1_MATCH_MODE, this field indicates if SNAP and 3-byte LLC is expected to be present. 0: Only Ethernet type II supported, no SNAP/LLC 1: Ethernet type II and Ethernet type I with SNAP/LLC, determine if SNAP/LLC is present or not. Type I always assumes that SNAP/LLC is present.	0x0

4.9.4.3 ETHERNET_COMPARATOR:EGR0_ETH2_FLOW_CFG:EGR0_ETH2_ADDR_MATCH_1

Parent: ETHERNET_COMPARATOR:EGR0_ETH2_FLOW_CFG

Instances: 1

Table 228 • **Fields in EGR0_ETH2_ADDR_MATCH_1**

Field Name	Bit	Access	Description	Default
EGR0_ETH2_ADDR_MATCH_1	31:0	R/W	First 32 bits of the address match value	0x00000000

4.9.4.4 ETHERNET_COMPARATOR:EGR0_ETH2_FLOW_CFG:EGR0_ETH2_ADDR_MATCH_2

Parent: ETHERNET_COMPARATOR:EGR0_ETH2_FLOW_CFG

Instances: 1

Table 229 • **Fields in EGR0_ETH2_ADDR_MATCH_2**

Field Name	Bit	Access	Description	Default
EGR0_ETH2_ADDR_MATCH_MODE	22:20	R/W	Selects how the addresses are matched. One-hot encoded. Multiple bits can be set at once. 0: Full 48-bit address match 1: Match any unicast address 2: Match any mulitcast address	0x1
EGR0_ETH2_ADDR_MATCH_SELECT	17:16	R/W	Selects which address to match 0: Match the destination address 1: Match the source address 2: Match either the source of destination address 3: Reserved	0x0
EGR0_ETH2_ADDR_MATCH_2	15:0	R/W	Last 16 bits of the Ethernet address match field	0x0000

4.9.4.5 ETHERNET_COMPARATOR:EGR0_ETH2_FLOW_CFG:EGR0_ETH2_VLAN_TAG_RANGE_I_TAG

Parent: ETHERNET_COMPARATOR:EGR0_ETH2_FLOW_CFG

Instances: 1

Table 230 • **Fields in EGR0_ETH2_VLAN_TAG_RANGE_I_TAG**

Field Name	Bit	Access	Description	Default
EGR0_ETH2_VLAN_TAG_RANGE_UPPER	27:16	R/W	Contains the upper range of the VLAN tag range match	0xFFF
EGR0_ETH2_VLAN_TAG_RANGE_LOWER	11:0	R/W	Contains the lower range of the VLAN tag range match	0x000

4.9.4.6 ETHERNET_COMPARATOR:EGR0_ETH2_FLOW_CFG:EGR0_ETH2_VLAN_TAG1

Parent: ETHERNET_COMPARATOR:EGR0_ETH2_FLOW_CFG

Instances: 1

Table 231 • **Fields in EGR0_ETH2_VLAN_TAG1**

Field Name	Bit	Access	Description	Default
EGR0_ETH2_VLAN_TAG1_MASK	27:16	R/W	Mask value for VLAN tag 1	0xFFF
EGR0_ETH2_VLAN_TAG1_MATCH	11:0	R/W	Match value for the first VLAN tag	0x000

4.9.4.7 ETHERNET_COMPARATOR:EGR0_ETH2_FLOW_CFG:EGR0_ETH2_VLAN_TAG2_I_TAG

Parent: ETHERNET_COMPARATOR:EGR0_ETH2_FLOW_CFG

Instances: 1

Table 232 • **Fields in EGR0_ETH2_VLAN_TAG2_I_TAG**

Field Name	Bit	Access	Description	Default
EGR0_ETH2_VLAN_TAG2_MASK	27:16	R/W	Mask field for VLAN tag 2	0xFFF
EGR0_ETH2_VLAN_TAG2_MATCH	11:0	R/W	Match field for VLAN Tag 2	0x000

4.9.5 ETHERNET_COMPARATOR:EGR0_MPLS_NXT_COMPARATOR

Parent: Egress0 Ethernet Comparator

Instances: 1

Table 233 • **Registers in EGR0_MPLS_NXT_COMPARATOR**

Register Name	Offset within Register Group	Instances and Address Spacing	Description	Details
EGR0_MPLS_NXT_COMPARATOR	0x00000000	1	MPLS next protocol comparator register	Page 186

4.9.5.1 ETHERNET_COMPARATOR:EGR0_MPLS_NXT_COMPARATOR:EGR0_MPLS_NXT_COMPARATOR

Parent: ETHERNET_COMPARATOR:EGR0_MPLS_NXT_COMPARATOR

Instances: 1

Table 234 • **Fields in EGR0_MPLS_NXT_COMPARATOR**

Field Name	Bit	Access	Description	Default
EGR0_MPLS_CTL_WORD	16	R/W	Indicates the presence of a control word after the last label. The first 4 bits of the control word are always 0. 0: No control word after the last label 1: Control word after the last label	0x0

Table 234 • **Fields in EGR0_MPLS_NXT_COMPARATOR *(continued)***

Field Name	Bit	Access	Description	Default
EGR0_MPLS_NXT_COMPARATOR	2:0	R/W	Points to the next comparator stage. If this comparator block is not used, this field must be set to 0. 0: Comparator block not used. 1: Ethernet comparator 2 2: IP/UDP/ACH comparator 1 3: IP/UDP/ACH comparator 2 4: Reserved 5: PTP/OAM comparator 6,7: Reserved	0x0

4.9.6 ETHERNET_COMPARATOR:EGR0_MPLS_FLOW_CFG

Parent: Egress0 Ethernet Comparator

Instances: 8

Table 235 • **Registers in EGR0_MPLS_FLOW_CFG**

Register Name	Offset within Register Group	Instances and Address Spacing	Description	Details
EGR0_MPLS_FLOW_CONTROL	0x00000000	1	MPLS flow control register	Page 187
EGR0_MPLS_LABEL_RANGE_LOWER_0	0x00000008	1	MPLS label 0 match range lower value	Page 188
EGR0_MPLS_LABEL_RANGE_UPPER_0	0x0000000C	1	MPLS label 0 match range upper value	Page 188
EGR0_MPLS_LABEL_RANGE_LOWER_1	0x00000010	1	MPLS label 1 match range lower value	Page 189
EGR0_MPLS_LABEL_RANGE_UPPER_1	0x00000014	1	MPLS label 1 match range upper value	Page 189
EGR0_MPLS_LABEL_RANGE_LOWER_2	0x00000018	1	MPLS label 2 match range lower value	Page 189
EGR0_MPLS_LABEL_RANGE_UPPER_2	0x0000001C	1	MPLS label 2 match range upper value	Page 189
EGR0_MPLS_LABEL_RANGE_LOWER_3	0x00000020	1	MPLS label 3 match range lower value	Page 190
EGR0_MPLS_LABEL_RANGE_UPPER_3	0x00000024	1	MPLS label 3 match range upper value	Page 190

4.9.6.1 ETHERNET_COMPARATOR:EGR0_MPLS_FLOW_CFG:EGR0_MPLS_FLOW_CONTROL

Parent: ETHERNET_COMPARATOR:EGR0_MPLS_FLOW_CFG

Instances: 1

Table 236 • **Fields in EGR0_MPLS_FLOW_CONTROL**

Field Name	Bit	Access	Description	Default
EGR0_MPLS_CHANNEL_MASK	25:24	R/W	MPLS channel mask selector 0x0: Flow invalid 0x1: Flow valid for channel 0 0x2: Flow valid for channel 1 0x3: Flow valid for both channels	0x3
EGR0_MPLS_STACK_DEPTH	19:16	R/W	Stack depth configuration Defines the allowable stack depths for searches. The direction that the stack is referenced is determined by the setting of MPLS_REF_PNT. For each bit set, the following table maps bits to stack depths: 0: Stack allowed to be 1 label deep 1: Stack allowed to be 2 labels deep 2: Stack allowed to be 3 labels deep 3: Stack allowed to be 4 labels deep	0x0
EGR0_MPLS_REF_PNT	4	R/W	Search direction for label matching 0: All searching is performed starting from the top of the stack 1: All searching is performed from the end of the stack	0x0
EGR0_MPLS_FLOW_ENA	0	R/W	Flow enable. If this comparator block is not used, all flow enable bits must be set to 0. 0: Flow is disabled 1: Flow is enabled	0x0

4.9.6.2 ETHERNET_COMPARATOR:EGR0_MPLS_FLOW_CFG:EGR0_MPLS_LABEL_RANGE_LOWER_0

Parent: ETHERNET_COMPARATOR:EGR0_MPLS_FLOW_CFG

Instances: 1

Table 237 • **Fields in EGR0_MPLS_LABEL_RANGE_LOWER_0**

Field Name	Bit	Access	Description	Default
EGR0_MPLS_LABEL_RANGE_LOWER_0	19:0	R/W	Lower value for label 0 match range	0x00000

4.9.6.3 ETHERNET_COMPARATOR:EGR0_MPLS_FLOW_CFG:EGR0_MPLS_LABEL_RANGE_UPPER_0

Parent: ETHERNET_COMPARATOR:EGR0_MPLS_FLOW_CFG

Instances: 1

Table 238 • **Fields in EGR0_MPLS_LABEL_RANGE_UPPER_0**

Field Name	Bit	Access	Description	Default
EGR0_MPLS_LABEL_RANGE_UPPER_0	19:0	R/W	Upper value for label 0 match range	0xFFFFF

4.9.6.4 ETHERNET_COMPARATOR:EGR0_MPLS_FLOW_CFG:EGR0_MPLS_LABEL_RANGE_LOWER_1

Parent: ETHERNET_COMPARATOR:EGR0_MPLS_FLOW_CFG

Instances: 1

Table 239 • **Fields in EGR0_MPLS_LABEL_RANGE_LOWER_1**

Field Name	Bit	Access	Description	Default
EGR0_MPLS_LABEL_RANGE_LOWER_1	19:0	R/W	Lower value for label 1 match range	0x00000

4.9.6.5 ETHERNET_COMPARATOR:EGR0_MPLS_FLOW_CFG:EGR0_MPLS_LABEL_RANGE_UPPER_1

Parent: ETHERNET_COMPARATOR:EGR0_MPLS_FLOW_CFG

Instances: 1

Table 240 • **Fields in EGR0_MPLS_LABEL_RANGE_UPPER_1**

Field Name	Bit	Access	Description	Default
EGR0_MPLS_LABEL_RANGE_UPPER_1	19:0	R/W	Upper value for label 1 match range	0xFFFFF

4.9.6.6 ETHERNET_COMPARATOR:EGR0_MPLS_FLOW_CFG:EGR0_MPLS_LABEL_RANGE_LOWER_2

Parent: ETHERNET_COMPARATOR:EGR0_MPLS_FLOW_CFG

Instances: 1

Table 241 • **Fields in EGR0_MPLS_LABEL_RANGE_LOWER_2**

Field Name	Bit	Access	Description	Default
EGR0_MPLS_LABEL_RANGE_LOWER_2	19:0	R/W	Lower value for label 2 match range	0x00000

4.9.6.7 ETHERNET_COMPARATOR:EGR0_MPLS_FLOW_CFG:EGR0_MPLS_LABEL_RANGE_UPPER_2

Parent: ETHERNET_COMPARATOR:EGR0_MPLS_FLOW_CFG

Instances: 1

Table 242 • **Fields in EGR0_MPLS_LABEL_RANGE_UPPER_2**

Field Name	Bit	Access	Description	Default
EGR0_MPLS_LABEL_RANGE_UPPER_2	19:0	R/W	Upper value for label 2 match range	0xFFFFF

4.9.6.8 ETHERNET_COMPARATOR:EGR0_MPLS_FLOW_CFG:EGR0_MPLS_LABEL_RANGE_LOWER_3

Parent: ETHERNET_COMPARATOR:EGR0_MPLS_FLOW_CFG

Instances: 1

Table 243 • **Fields in EGR0_MPLS_LABEL_RANGE_LOWER_3**

Field Name	Bit	Access	Description	Default
EGR0_MPLS_LABEL_RANGE_LOWER_3	19:0	R/W	Lower value for label 3 match range	0x00000

4.9.6.9 ETHERNET_COMPARATOR:EGR0_MPLS_FLOW_CFG:EGR0_MPLS_LABEL_RANGE_UPPER_3

Parent: ETHERNET_COMPARATOR:EGR0_MPLS_FLOW_CFG

Instances: 1

Table 244 • **Fields in EGR0_MPLS_LABEL_RANGE_UPPER_3**

Field Name	Bit	Access	Description	Default
EGR0_MPLS_LABEL_RANGE_UPPER_3	19:0	R/W	Upper value for label 3 match range	0xFFFFF

4.9.7 ETHERNET_COMPARATOR:EGR0_IP1_NXT_PROTOCOL

Parent: Egress0 Ethernet Comparator

Instances: 1

Table 245 • **Registers in EGR0_IP1_NXT_PROTOCOL**

Register Name	Offset within Register Group	Instances and Address Spacing	Description	Details
EGR0_IP1_NXT_COMPARATOR	0x00000000	1	IP next comparator control register	Page 191
EGR0_IP1_MODE	0x00000004	1	IP comparator mode	Page 191
EGR0_IP1_PROT_MATCH_1	0x00000008	1	IP match register set 1	Page 192
EGR0_IP1_PROT_MATCH_2_UPPER	0x0000000C	1	Upper portion of match register 2	Page 192

Table 245 • **Registers in EGR0_IP1_NXT_PROTOCOL *(continued)***

Register Name	Offset within Register Group	Instances and Address Spacing	Description	Details
EGR0_IP1_PROT_MATCH_2_LOWER	0x00000010	1	Lower portion of match register 2	Page 192
EGR0_IP1_PROT_MASK_2_UPPER	0x00000014	1	Upper portion of match mask register 2	Page 193
EGR0_IP1_PROT_MASK_2_LOWER	0x00000018	1	Lower portion of match mask register 2	Page 193
EGR0_IP1_PROT_OFFSET_2	0x0000001C	1	IP match offset register set 2	Page 193
EGR0_IP1_UDP_CHKSUM_CFG	0x00000020	1	IP/UDP checksum control register	Page 193
EGR0_IP1_FRAME_SIG_CFG	0x00000024	1	IP frame signature control register	Page 194

4.9.7.1 ETHERNET_COMPARATOR:EGR0_IP1_NXT_PROTOCOL:EGR0_IP1_NXT_COMPARATOR

Parent: ETHERNET_COMPARATOR:EGR0_IP1_NXT_PROTOCOL

Instances: 1

Table 246 • **Fields in EGR0_IP1_NXT_COMPARATOR**

Field Name	Bit	Access	Description	Default
EGR0_IP1_NXT_PROTOCOL	15:8	R/W	Number of bytes in this header, points to the beginning of the next protocol.	0x00
EGR0_IP1_NXT_COMPARATOR	2:0	R/W	Points to the next comparator stage. If this comparator block is not used, this field must be set to 0. 0: Comparator block not used 1: Reserved 2: Reserved 3: IP/UDP/ACH comparator 2 4: Reserved 5: PTP/OAM comparator 6,7: Reserved	0x0

4.9.7.2 ETHERNET_COMPARATOR:EGR0_IP1_NXT_PROTOCOL:EGR0_IP1_MODE

Parent: ETHERNET_COMPARATOR:EGR0_IP1_NXT_PROTOCOL

Instances: 1

Table 247 • **Fields in EGR0_IP1_MODE**

Field Name	Bit	Access	Description	Default
EGR0_IP1_FLOW_OFFSET	12:8	R/W	Points to the source address field in the IP frame. Use 12 for IPv4 and 8 for IPv6.	0x0C

Table 247 • **Fields in EGR0_IP1_MODE *(continued)***

Field Name	Bit	Access	Description	Default
EGR0_IP1_MODE	1:0	R/W	IP mode 0: IPv4 1: IPv6 2: Other protocol, 32-bit address match 3: Other protocol, 128-bit address match	0x0

4.9.7.3 ETHERNET_COMPARATOR:EGR0_IP1_NXT_PROTOCOL:EGR0_IP1_PROT_MATCH_1

Parent: ETHERNET_COMPARATOR:EGR0_IP1_NXT_PROTOCOL

Instances: 1

Table 248 • **Fields in EGR0_IP1_PROT_MATCH_1**

Field Name	Bit	Access	Description	Default
EGR0_IP1_PROT_OFFSET_1	20:16	R/W	Points to the start of this match field relative to the first byte of this protocol	0x00
EGR0_IP1_PROT_MASK_1	15:8	R/W	Mask field for IP_PROT_MATCH_1	0x00
EGR0_IP1_PROT_MATCH_1	7:0	R/W	8-bit match field	0x00

4.9.7.4 ETHERNET_COMPARATOR:EGR0_IP1_NXT_PROTOCOL:EGR0_IP1_PROT_MATCH_2_UPPER

Parent: ETHERNET_COMPARATOR:EGR0_IP1_NXT_PROTOCOL

Instances: 1

Table 249 • **Fields in EGR0_IP1_PROT_MATCH_2_UPPER**

Field Name	Bit	Access	Description	Default
EGR0_IP1_PROT_MATCH_2_UPPER	31:0	R/W	64-bit match register for advancing to the next protocol, upper portion.	0x00000000

4.9.7.5 ETHERNET_COMPARATOR:EGR0_IP1_NXT_PROTOCOL:EGR0_IP1_PROT_MATCH_2_LOWER

Parent: ETHERNET_COMPARATOR:EGR0_IP1_NXT_PROTOCOL

Instances: 1

Table 250 • **Fields in EGR0_IP1_PROT_MATCH_2_LOWER**

Field Name	Bit	Access	Description	Default
EGR0_IP1_PROT_MATCH_2_LOWER	31:0	R/W	64-bit match register for advancing to the next protocol, lower portion.	0x00000000

4.9.7.6 ETHERNET_COMPARATOR:EGR0_IP1_NXT_PROTOCOL:EGR0_IP1_PROT_MASK_2_UPPER

Parent: ETHERNET_COMPARATOR:EGR0_IP1_NXT_PROTOCOL

Instances: 1

Table 251 • **Fields in EGR0_IP1_PROT_MASK_2_UPPER**

Field Name	Bit	Access	Description	Default
EGR0_IP1_PROT_MASK_2_UPPER	31:0	R/W	64-bit match register for advancing to the next protocol, upper portion.	0x00000000

4.9.7.7 ETHERNET_COMPARATOR:EGR0_IP1_NXT_PROTOCOL:EGR0_IP1_PROT_MASK_2_LOWER

Parent: ETHERNET_COMPARATOR:EGR0_IP1_NXT_PROTOCOL

Instances: 1

Table 252 • **Fields in EGR0_IP1_PROT_MASK_2_LOWER**

Field Name	Bit	Access	Description	Default
EGR0_IP1_PROT_MASK_2_LOWER	31:0	R/W	64-bit match register for advancing to the next protocol, lower portion.	0x00000000

4.9.7.8 ETHERNET_COMPARATOR:EGR0_IP1_NXT_PROTOCOL:EGR0_IP1_PROT_OFFSET_2

Parent: ETHERNET_COMPARATOR:EGR0_IP1_NXT_PROTOCOL

Instances: 1

Table 253 • **Fields in EGR0_IP1_PROT_OFFSET_2**

Field Name	Bit	Access	Description	Default
EGR0_IP1_PROT_OFFSET_2	6:0	R/W	Points to the start of match field 2 relative to the first byte of this protocol	0x00

4.9.7.9 ETHERNET_COMPARATOR:EGR0_IP1_NXT_PROTOCOL:EGR0_IP1_UDP_CHKSUM_CFG

Parent: ETHERNET_COMPARATOR:EGR0_IP1_NXT_PROTOCOL

Instances: 1

Table 254 • **Fields in EGR0_IP1_UDP_CHKSUM_CFG**

Field Name	Bit	Access	Description	Default
EGR0_IP1_UDP_CHKSUM_OFFSET	15:8	R/W	Pointer to the IP/UDP checksum field FOR IPv4 frames or to the pad bytes of a IPv6/UDP frame. For IPv4, it points to the bytes that will be cleared. For IPv6, it points to the bytes that will be updated to fix the CRC.	0x00
EGR0_IP1_UDP_CHKSUM_WIDTH	5:4	R/W	Specifies the length of the checksum field in bytes	0x2
EGR0_IP1_UDP_CHKSUM_UPDATE_ENA	1	R/W	This bit and IP_UDP_CHKSUM_CLEAR_ENA CANNOT be set together 0: No pad byte field update 1: Update the pad bytes at the end of the frame	0x0
EGR0_IP1_UDP_CHKSUM_CLEAR_ENA	0	R/W	This bit and IP_UDP_CHKSUM_UPDATE_ENA CANNOT be set together 0: Do not clear the checksum 1: Clear the UDP checksum field in an IPv4 frame	0x0

4.9.7.10 ETHERNET_COMPARATOR:EGR0_IP1_NXT_PROTOCOL:EGR0_IP1_FRAME_SIG_CFG

Parent: ETHERNET_COMPARATOR:EGR0_IP1_NXT_PROTOCOL

Instances: 1

Table 255 • **Fields in EGR0_IP1_FRAME_SIG_CFG**

Field Name	Bit	Access	Description	Default
EGR0_IP1_FRAME_SIG_OFFSET	4:0	R/W	Pointer to the start of the field that will be used for the frame signature. Position is relative to the first header byte of this IP protocol. Only even values are allowed.	0x00

4.9.8 ETHERNET_COMPARATOR:EGR0_IP1_FLOW_CFG

Parent: Egress0 Ethernet Comparator

Instances: 8

Table 256 • **Registers in EGR0_IP1_FLOW_CFG**

Register Name	Offset within Register Group	Instances and Address Spacing	Description	Details
EGR0_IP1_FLOW_ENA	0x00000000	1	IP flow enable register	Page 195

Table 256 • **Registers in EGR0_IP1_FLOW_CFG *(continued)***

Register Name	Offset within Register Group	Instances and Address Spacing	Description	Details
EGR0_IP1_FLOW_MATCH_UPPER	0x00000004	1	Upper portion of the IP flow match register	Page 195
EGR0_IP1_FLOW_MATCH_UPPER_MID	0x00000008	1	Upper mid portion of the IP flow match register	Page 196
EGR0_IP1_FLOW_MATCH_LOWER_MID	0x0000000C	1	Lower mid portion of the IP flow match register	Page 196
EGR0_IP1_FLOW_MATCH_LOWER	0x00000010	1	Lower portion of the IP flow match register	Page 196
EGR0_IP1_FLOW_MASK_UPPER	0x00000014	1	IP flow match mask register, bytes 12-15	Page 196
EGR0_IP1_FLOW_MASK_UPPER_MID	0x00000018	1	IP flow match mask register, bytes 8-11	Page 197
EGR0_IP1_FLOW_MASK_LOWER_MID	0x0000001C	1	IP flow match mask register, bytes 4-7	Page 197
EGR0_IP1_FLOW_MASK_LOWER	0x00000020	1	IP flow match mask register, bytes 0-3	Page 197

4.9.8.1 ETHERNET_COMPARATOR:EGR0_IP1_FLOW_CFG:EGR0_IP1_FLOW_ENA

Parent: ETHERNET_COMPARATOR:EGR0_IP1_FLOW_CFG

Instances: 1

Table 257 • **Fields in EGR0_IP1_FLOW_ENA**

Field Name	Bit	Access	Description	Default
EGR0_IP1_FLOW_MATCH_MODE	9:8	R/W	Match mode 0: Match on source address 1: Match on destination address 2: Match on either source or destination address 3: Reserved	0x0
EGR0_IP1_CHANNEL_MASK	5:4	R/W	Channel mask 0x0: Flow invalid 0x1: Flow valid for channel 0 0x2: Flow valid for channel 1 0x3: Flow valid for both channels	0x3
EGR0_IP1_FLOW_ENA	0	R/W	Flow enable. If this comparator block is not used, all flow enable bits must be set to 0. 0: Flow disabled 1: Flow enabled	0x0

4.9.8.2 ETHERNET_COMPARATOR:EGR0_IP1_FLOW_CFG:EGR0_IP1_FLOW_MATCH_UPPER

Parent: ETHERNET_COMPARATOR:EGR0_IP1_FLOW_CFG

Instances: 1

Table 258 • **Fields in EGR0_IP1_FLOW_MATCH_UPPER**

Field Name	Bit	Access	Description	Default
EGR0_IP1_FLOW_MATCH_UPPER	31:0	R/W	Match field for either the entire 32-bit selected address for IPv4 or the upper 32 bits of the selected address for IPv6	0x00000000

4.9.8.3 ETHERNET_COMPARATOR:EGR0_IP1_FLOW_CFG:EGR0_IP1_FLOW_MATCH_UPPER_MID

Parent: ETHERNET_COMPARATOR:EGR0_IP1_FLOW_CFG

Instances: 1

Table 259 • **Fields in EGR0_IP1_FLOW_MATCH_UPPER_MID**

Field Name	Bit	Access	Description	Default
EGR0_IP1_FLOW_MATCH_UPPER_MID	31:0	R/W	Match bits for the upper middle 32 bits of the IPv6 address	0x00000000

4.9.8.4 ETHERNET_COMPARATOR:EGR0_IP1_FLOW_CFG:EGR0_IP1_FLOW_MATCH_LOWER_MID

Parent: ETHERNET_COMPARATOR:EGR0_IP1_FLOW_CFG

Instances: 1

Table 260 • **Fields in EGR0_IP1_FLOW_MATCH_LOWER_MID**

Field Name	Bit	Access	Description	Default
EGR0_IP1_FLOW_MATCH_LOWER_MID	31:0	R/W	Match bits for the lower middle 32 bits of the IPv6 address	0x00000000

4.9.8.5 ETHERNET_COMPARATOR:EGR0_IP1_FLOW_CFG:EGR0_IP1_FLOW_MATCH_LOWER

Parent: ETHERNET_COMPARATOR:EGR0_IP1_FLOW_CFG

Instances: 1

Table 261 • **Fields in EGR0_IP1_FLOW_MATCH_LOWER**

Field Name	Bit	Access	Description	Default
EGR0_IP1_FLOW_MATCH_LOWER	31:0	R/W	Match bits for the lower 32 bits of the IPv6 address	0x00000000

4.9.8.6 ETHERNET_COMPARATOR:EGR0_IP1_FLOW_CFG:EGR0_IP1_FLOW_MASK_UPPER

Parent: ETHERNET_COMPARATOR:EGR0_IP1_FLOW_CFG

Instances: 1

Table 262 • **Fields in EGR0_IP1_FLOW_MASK_UPPER**

Field Name	Bit	Access	Description	Default
EGR0_IP1_FLOW_MASK_UPPER	31:0	R/W	Address mask for the IP address	0x00000000

4.9.8.7 ETHERNET_COMPARATOR:EGR0_IP1_FLOW_CFG:EGR0_IP1_FLOW_MASK_UPPER_MID

Parent: ETHERNET_COMPARATOR:EGR0_IP1_FLOW_CFG

Instances: 1

Table 263 • **Fields in EGR0_IP1_FLOW_MASK_UPPER_MID**

Field Name	Bit	Access	Description	Default
EGR0_IP1_FLOW_MASK_UPPER_MID	31:0	R/W	These bits must be all 0 for IPv4 and any 32-bit address match mode	0x00000000

4.9.8.8 ETHERNET_COMPARATOR:EGR0_IP1_FLOW_CFG:EGR0_IP1_FLOW_MASK_LOWER_MID

Parent: ETHERNET_COMPARATOR:EGR0_IP1_FLOW_CFG

Instances: 1

Table 264 • **Fields in EGR0_IP1_FLOW_MASK_LOWER_MID**

Field Name	Bit	Access	Description	Default
EGR0_IP1_FLOW_MASK_LOWER_MID	31:0	R/W	These bits must be all 0 for IPv4 and any 32-bit address match mode	0x00000000

4.9.8.9 ETHERNET_COMPARATOR:EGR0_IP1_FLOW_CFG:EGR0_IP1_FLOW_MASK_LOWER

Parent: ETHERNET_COMPARATOR:EGR0_IP1_FLOW_CFG

Instances: 1

Table 265 • **Fields in EGR0_IP1_FLOW_MASK_LOWER**

Field Name	Bit	Access	Description	Default
EGR0_IP1_FLOW_MASK_LOWER	31:0	R/W	These bits must be all 0 for IPv4 and any 32-bit address match mode	0x00000000

4.9.9 ETHERNET_COMPARATOR:EGR0_IP2_NXT_PROTOCOL

Parent: Egress0 Ethernet Comparator

Instances: 1

Table 266 • **Registers in EGR0_IP2_NXT_PROTOCOL**

Register Name	Offset within Register Group	Instances and Address Spacing	Description	Details
EGR0_IP2_NXT_COMPARATOR	0x00000000	1	IP next comparator control register	Page 198
EGR0_IP2_MODE	0x00000004	1	IP comparator mode	Page 198
EGR0_IP2_PROT_MATCH_1	0x00000008	1	IP match register set 1	Page 199
EGR0_IP2_PROT_MATCH_2_UPPER	0x0000000C	1	Upper portion of match register 2	Page 199
EGR0_IP2_PROT_MATCH_2_LOWER	0x00000010	1	Lower portion of match register 2	Page 199
EGR0_IP2_PROT_MASK_2_UPPER	0x00000014	1	Upper portion of match mask register 2	Page 200
EGR0_IP2_PROT_MASK_2_LOWER	0x00000018	1	Lower portion of match mask register 2	Page 200
EGR0_IP2_PROT_OFFSET_2	0x0000001C	1	IP match offset register set 2	Page 200
EGR0_IP2_UDP_CHKSUM_CFG	0x00000020	1	IP/UDP checksum control register	Page 200
EGR0_IP2_FRAME_SIG_CFG	0x00000024	1	IP frame signature control register	Page 201

4.9.9.1 ETHERNET_COMPARATOR:EGR0_IP2_NXT_PROTOCOL:EGR0_IP2_NXT_COMPARATOR

Parent: ETHERNET_COMPARATOR:EGR0_IP2_NXT_PROTOCOL

Instances: 1

Table 267 • **Fields in EGR0_IP2_NXT_COMPARATOR**

Field Name	Bit	Access	Description	Default
EGR0_IP2_NXT_PROTOCOL	15:8	R/W	Number of bytes in this header, points to the beginning of the next protocol.	0x00
EGR0_IP2_NXT_COMPARATOR	2:0	R/W	Points to the next comparator stage. If this comparator block is not used, this field must be set to 0. 0: Comparator block not used 1: Reserved 2: Reserved 3: Reserved 4: Reserved 5: PTP/OAM comparator 6,7: Reserved	0x0

4.9.9.2 ETHERNET_COMPARATOR:EGR0_IP2_NXT_PROTOCOL:EGR0_IP2_MODE

Parent: ETHERNET_COMPARATOR:EGR0_IP2_NXT_PROTOCOL

Instances: 1

Table 268 • **Fields in EGR0_IP2_MODE**

Field Name	Bit	Access	Description	Default
EGR0_IP2_FLOW_OFFSET	12:8	R/W	Points to the source address field in the IP frame. Use 12 for IPv4 and 8 for IPv6	0x0C
EGR0_IP2_MODE	1:0	R/W	IP mode 0: IPv4 1: IPv6 2: Other protocol, 32-bit address match 3: Other protocol, 128-bit address match	0x0

4.9.9.3 ETHERNET_COMPARATOR:EGR0_IP2_NXT_PROTOCOL:EGR0_IP2_PROT_MATCH_1

Parent: ETHERNET_COMPARATOR:EGR0_IP2_NXT_PROTOCOL

Instances: 1

Table 269 • **Fields in EGR0_IP2_PROT_MATCH_1**

Field Name	Bit	Access	Description	Default
EGR0_IP2_PROT_OFFSET_1	20:16	R/W	Points to the start of this match field relative to the first byte of this protocol	0x00
EGR0_IP2_PROT_MASK_1	15:8	R/W	Mask field for IP_PROT_MATCH_1	0x00
EGR0_IP2_PROT_MATCH_1	7:0	R/W	8-bit match field	0x00

4.9.9.4 ETHERNET_COMPARATOR:EGR0_IP2_NXT_PROTOCOL:EGR0_IP2_PROT_MATCH_2_UPPER

Parent: ETHERNET_COMPARATOR:EGR0_IP2_NXT_PROTOCOL

Instances: 1

Table 270 • **Fields in EGR0_IP2_PROT_MATCH_2_UPPER**

Field Name	Bit	Access	Description	Default
EGR0_IP2_PROT_MATCH_2_UPPER	31:0	R/W	64-bit match register for advancing to the next protocol, upper portion	0x00000000

4.9.9.5 ETHERNET_COMPARATOR:EGR0_IP2_NXT_PROTOCOL:EGR0_IP2_PROT_MATCH_2_LOWER

Parent: ETHERNET_COMPARATOR:EGR0_IP2_NXT_PROTOCOL

Instances: 1

Table 271 • **Fields in EGR0_IP2_PROT_MATCH_2_LOWER**

Field Name	Bit	Access	Description	Default
EGR0_IP2_PROT_MATCH_2_LOWER	31:0	R/W	64-bit match register for advancing to the next protocol, lower portion	0x00000000

4.9.9.6 ETHERNET_COMPARATOR:EGR0_IP2_NXT_PROTOCOL:EGR0_IP2_PROT_MASK_2_UPPER

Parent: ETHERNET_COMPARATOR:EGR0_IP2_NXT_PROTOCOL

Instances: 1

Table 272 • **Fields in EGR0_IP2_PROT_MASK_2_UPPER**

Field Name	Bit	Access	Description	Default
EGR0_IP2_PROT_MASK_2_UPPER	31:0	R/W	64-bit match register for advancing to the next protocol, upper portion.	0x00000000

4.9.9.7 ETHERNET_COMPARATOR:EGR0_IP2_NXT_PROTOCOL:EGR0_IP2_PROT_MASK_2_LOWER

Parent: ETHERNET_COMPARATOR:EGR0_IP2_NXT_PROTOCOL

Instances: 1

Table 273 • **Fields in EGR0_IP2_PROT_MASK_2_LOWER**

Field Name	Bit	Access	Description	Default
EGR0_IP2_PROT_MASK_2_LOWER	31:0	R/W	64-bit match register for advancing to the next protocol, lower portion.	0x00000000

4.9.9.8 ETHERNET_COMPARATOR:EGR0_IP2_NXT_PROTOCOL:EGR0_IP2_PROT_OFFSET_2

Parent: ETHERNET_COMPARATOR:EGR0_IP2_NXT_PROTOCOL

Instances: 1

Table 274 • **Fields in EGR0_IP2_PROT_OFFSET_2**

Field Name	Bit	Access	Description	Default
EGR0_IP2_PROT_OFFSET_2	6:0	R/W	Points to the start of match field 2 relative to the first byte of this protocol	0x00

4.9.9.9 ETHERNET_COMPARATOR:EGR0_IP2_NXT_PROTOCOL:EGR0_IP2_UDP_CHKSUM_CFG

Parent: ETHERNET_COMPARATOR:EGR0_IP2_NXT_PROTOCOL

Instances: 1

Table 275 • **Fields in EGR0_IP2_UDP_CHKSUM_CFG**

Field Name	Bit	Access	Description	Default
EGR0_IP2_UDP_CHKSUM_OFFSET	15:8	R/W	Pointer to the IP/UDP checksum field FOR IPv4 frames or to the pad bytes of a IPv6/UDP frame. For IPv4, it points to the bytes that will be cleared. For IPv6, it points to the bytes that will be updated to fix the CRC.	0x00
EGR0_IP2_UDP_CHKSUM_WIDTH	5:4	R/W	Specifies the length of the checksum field in bytes	0x2
EGR0_IP2_UDP_CHKSUM_UPDATE_ENA	1	R/W	This bit and IP_UDP_CHKSUM_CLEAR_ENA CANNOT be set together 0: No pad byte field update 1: Update the pad bytes at the end of the frame	0x0
EGR0_IP2_UDP_CHKSUM_CLEAR_ENA	0	R/W	This bit and IP_UDP_CHKSUM_UPDATE_ENA CANNOT be set together 0: Do not clear the checksum 1: Clear the UDP checksum field in an IPv4 frame	0x0

4.9.9.10 ETHERNET_COMPARATOR:EGR0_IP2_NXT_PROTOCOL:EGR0_IP2_FRAME_SIG_CFG

Parent: ETHERNET_COMPARATOR:EGR0_IP2_NXT_PROTOCOL

Instances: 1

Table 276 • **Fields in EGR0_IP2_FRAME_SIG_CFG**

Field Name	Bit	Access	Description	Default
EGR0_IP2_FRAME_SIG_OFFSET	4:0	R/W	Pointer to the start of the field that will be used for the frame signature. Position is relative to the first header byte of this IP protocol. Only even values are allowed.	0x00

4.9.10 ETHERNET_COMPARATOR:EGR0_IP2_FLOW_CFG

Parent: Egress0 Ethernet Comparator

Instances: 8

Table 277 • **Registers in EGR0_IP2_FLOW_CFG**

Register Name	Offset within Register Group	Instances and Address Spacing	Description	Details
EGR0_IP2_FLOW_ENA	0x00000000	1	IP flow enable register	Page 202

Table 277 • **Registers in EGR0_IP2_FLOW_CFG *(continued)***

Register Name	Offset within Register Group	Instances and Address Spacing	Description	Details
EGR0_IP2_FLOW_MATCH_UPPER	0x00000004	1	Upper portion of the IP flow match register	Page 202
EGR0_IP2_FLOW_MATCH_UPPER_MID	0x00000008	1	Upper mid portion of the IP flow match register	Page 203
EGR0_IP2_FLOW_MATCH_LOWER_MID	0x0000000C	1	Lower mid portion of the IP flow match register	Page 203
EGR0_IP2_FLOW_MATCH_LOWER	0x00000010	1	Lower portion of the IP flow match register	Page 203
EGR0_IP2_FLOW_MASK_UPPER	0x00000014	1	IP flow match mask register, bytes 12-15	Page 203
EGR0_IP2_FLOW_MASK_UPPER_MID	0x00000018	1	IP flow match mask register, bytes 8-11	Page 204
EGR0_IP2_FLOW_MASK_LOWER_MID	0x0000001C	1	IP flow match mask register, bytes 4-7	Page 204
EGR0_IP2_FLOW_MASK_LOWER	0x00000020	1	IP flow match mask register, bytes 0-3	Page 204

4.9.10.1 ETHERNET_COMPARATOR:EGR0_IP2_FLOW_CFG:EGR0_IP2_FLOW_ENA

Parent: ETHERNET_COMPARATOR:EGR0_IP2_FLOW_CFG

Instances: 1

Table 278 • **Fields in EGR0_IP2_FLOW_ENA**

Field Name	Bit	Access	Description	Default
EGR0_IP2_FLOW_MATCH_MODE	9:8	R/W	Match mode 0: Match on source address 1: Match on destination address 2: Match on either source or destination address 3: Reserved	0x0
EGR0_IP2_CHANNEL_MASK	5:4	R/W	Channel mask 0x0: Flow invalid 0x1: Flow valid for channel 0 0x2: Flow valid for channel 1 0x3: Flow valid for both channels	0x3
EGR0_IP2_FLOW_ENA	0	R/W	Flow enable. If this comparator block is not used, all flow enable bits must be set to 0. 0: Flow disabled 1: Flow enabled	0x0

4.9.10.2 ETHERNET_COMPARATOR:EGR0_IP2_FLOW_CFG:EGR0_IP2_FLOW_MATCH_UPPER

Parent: ETHERNET_COMPARATOR:EGR0_IP2_FLOW_CFG

Instances: 1

Table 279 • **Fields in EGR0_IP2_FLOW_MATCH_UPPER**

Field Name	Bit	Access	Description	Default
EGR0_IP2_FLOW_MATCH_UPPER	31:0	R/W	Match field for either the entire 32-bit selected address for IPv4 or the upper 32 bits of the selected address for IPv6	0x00000000

4.9.10.3 ETHERNET_COMPARATOR:EGR0_IP2_FLOW_CFG:EGR0_IP2_FLOW_MATCH_UPPER_MID

Parent: ETHERNET_COMPARATOR:EGR0_IP2_FLOW_CFG

Instances: 1

Table 280 • **Fields in EGR0_IP2_FLOW_MATCH_UPPER_MID**

Field Name	Bit	Access	Description	Default
EGR0_IP2_FLOW_MATCH_UPPER_MID	31:0	R/W	Match bits for the upper middle 32 bits of the IPv6 address	0x00000000

4.9.10.4 ETHERNET_COMPARATOR:EGR0_IP2_FLOW_CFG:EGR0_IP2_FLOW_MATCH_LOWER_MID

Parent: ETHERNET_COMPARATOR:EGR0_IP2_FLOW_CFG

Instances: 1

Table 281 • **Fields in EGR0_IP2_FLOW_MATCH_LOWER_MID**

Field Name	Bit	Access	Description	Default
EGR0_IP2_FLOW_MATCH_LOWER_MID	31:0	R/W	Match bits for the lower middle 32 bits of the IPv6 address	0x00000000

4.9.10.5 ETHERNET_COMPARATOR:EGR0_IP2_FLOW_CFG:EGR0_IP2_FLOW_MATCH_LOWER

Parent: ETHERNET_COMPARATOR:EGR0_IP2_FLOW_CFG

Instances: 1

Table 282 • **Fields in EGR0_IP2_FLOW_MATCH_LOWER**

Field Name	Bit	Access	Description	Default
EGR0_IP2_FLOW_MATCH_LOWER	31:0	R/W	Match bits for the lower 32 bits of the IPv6 address	0x00000000

4.9.10.6 ETHERNET_COMPARATOR:EGR0_IP2_FLOW_CFG:EGR0_IP2_FLOW_MASK_UPPER

Parent: ETHERNET_COMPARATOR:EGR0_IP2_FLOW_CFG

Instances: 1

Table 283 • **Fields in EGR0_IP2_FLOW_MASK_UPPER**

Field Name	Bit	Access	Description	Default
EGR0_IP2_FLOW_MASK_UPPER	31:0	R/W	Address mask for the IP address	0x00000000

4.9.10.7 ETHERNET_COMPARATOR:EGR0_IP2_FLOW_CFG:EGR0_IP2_FLOW_MASK_UPPER_MID

Parent: ETHERNET_COMPARATOR:EGR0_IP2_FLOW_CFG

Instances: 1

Table 284 • **Fields in EGR0_IP2_FLOW_MASK_UPPER_MID**

Field Name	Bit	Access	Description	Default
EGR0_IP2_FLOW_MASK_UPPER_MID	31:0	R/W	These bits must be all 0 for IPv4 and any 32-bit address match mode	0x00000000

4.9.10.8 ETHERNET_COMPARATOR:EGR0_IP2_FLOW_CFG:EGR0_IP2_FLOW_MASK_LOWER_MID

Parent: ETHERNET_COMPARATOR:EGR0_IP2_FLOW_CFG

Instances: 1

Table 285 • **Fields in EGR0_IP2_FLOW_MASK_LOWER_MID**

Field Name	Bit	Access	Description	Default
EGR0_IP2_FLOW_MASK_LOWER_MID	31:0	R/W	These bits must be all 0 for IPv4 and any 32-bit address match mode	0x00000000

4.9.10.9 ETHERNET_COMPARATOR:EGR0_IP2_FLOW_CFG:EGR0_IP2_FLOW_MASK_LOWER

Parent: ETHERNET_COMPARATOR:EGR0_IP2_FLOW_CFG

Instances: 1

Table 286 • **Fields in EGR0_IP2_FLOW_MASK_LOWER**

Field Name	Bit	Access	Description	Default
EGR0_IP2_FLOW_MASK_LOWER	31:0	R/W	These bits must be all 0 for IPv4 and any 32-bit address match mode	0x00000000

4.9.11 ETHERNET_COMPARATOR:EGR0_PTP_FLOW

Parent: Egress0 Ethernet Comparator

Instances: 6

Table 287 • **Registers in EGR0_PTP_FLOW**

Register Name	Offset within Register Group	Instances and Address Spacing	Description	Details
EGR0_PTP_FLOW_ENA	0x00000000	1	PTP/OAM flow enable	Page 205
EGR0_PTP_FLOW_MATCH_UPPER	0x00000004	1	Upper half of PTP/OAM flow match field	Page 205
EGR0_PTP_FLOW_MATCH_LOWER	0x00000008	1	Lower half of PTP/OAM flow match field	Page 206
EGR0_PTP_FLOW_MASK_UPPER	0x0000000C	1	Upper half of PTP/OAM flow match mask	Page 206
EGR0_PTP_FLOW_MASK_LOWER	0x00000010	1	Lower half of PTP/OAM flow match mask	Page 206
EGR0_PTP_DOMAIN_RANGE	0x00000014	1	PTP/OAM range match register	Page 206
EGR0_PTP_ACTION	0x00000018	1	PTP action control register	Page 207
EGR0_PTP_ACTION_2	0x0000001C	1	PTP action control register 2	Page 208
EGR0_PTP_ZERO_FIELD_CTL	0x00000020	1	Zero field control register	Page 208

4.9.11.1 ETHERNET_COMPARATOR:EGR0_PTP_FLOW:EGR0_PTP_FLOW_ENA

Parent: ETHERNET_COMPARATOR:EGR0_PTP_FLOW

Instances: 1

Table 288 • **Fields in EGR0_PTP_FLOW_ENA**

Field Name	Bit	Access	Description	Default
EGR0_PTP_CHANNEL_MASK	5:4	R/W	Channel mask 0x0: Flow invalid 0x1: Flow valid for channel 0 0x2: Flow valid for channel 1 0x3: Flow valid for both channels	0x3
EGR0_PTP_FLOW_ENA	0	R/W	Flow enable	0x0

4.9.11.2 ETHERNET_COMPARATOR:EGR0_PTP_FLOW:EGR0_PTP_FLOW_MATCH_UPPER

Parent: ETHERNET_COMPARATOR:EGR0_PTP_FLOW

Instances: 1

Table 289 • **Fields in EGR0_PTP_FLOW_MATCH_UPPER**

Field Name	Bit	Access	Description	Default
EGR0_PTP_FLOW_MATCH_UPPER	31:0	R/W	PTP flow match, upper 32 bit	0x00000000

4.9.11.3 ETHERNET_COMPARATOR:EGR0_PTP_FLOW:EGR0_PTP_FLOW_MATCH_LOWER

Parent: ETHERNET_COMPARATOR:EGR0_PTP_FLOW

Instances: 1

Table 290 • **Fields in EGR0_PTP_FLOW_MATCH_LOWER**

Field Name	Bit	Access	Description	Default
EGR0_PTP_FLOW_MATCH_LOWER	31:0	R/W	PTP flow match, lower 32 bit	0x00000000

4.9.11.4 ETHERNET_COMPARATOR:EGR0_PTP_FLOW:EGR0_PTP_FLOW_MASK_UPPER

Parent: ETHERNET_COMPARATOR:EGR0_PTP_FLOW

Instances: 1

Table 291 • **Fields in EGR0_PTP_FLOW_MASK_UPPER**

Field Name	Bit	Access	Description	Default
EGR0_PTP_FLOW_MASK_UPPER	31:0	R/W	PTP flow mask, upper 32 bit	0x00000000

4.9.11.5 ETHERNET_COMPARATOR:EGR0_PTP_FLOW:EGR0_PTP_FLOW_MASK_LOWER

Parent: ETHERNET_COMPARATOR:EGR0_PTP_FLOW

Instances: 1

Table 292 • **Fields in EGR0_PTP_FLOW_MASK_LOWER**

Field Name	Bit	Access	Description	Default
EGR0_PTP_FLOW_MASK_LOWER	31:0	R/W	PTP flow mask, lower 32 bit	0x00000000

4.9.11.6 ETHERNET_COMPARATOR:EGR0_PTP_FLOW:EGR0_PTP_DOMAIN_RANGE

Parent: ETHERNET_COMPARATOR:EGR0_PTP_FLOW

Instances: 1

Table 293 • **Fields in EGR0_PTP_DOMAIN_RANGE**

Field Name	Bit	Access	Description	Default
EGR0_PTP_DOMAIN_RANGE_OFFSET	28:24	R/W	PTP domain range offset	0x00
EGR0_PTP_DOMAIN_RANGE_UPPER	23:16	R/W	Upper range of PTP domain field to match	0xFF

Table 293 • **Fields in EGR0_PTP_DOMAIN_RANGE *(continued)***

Field Name	Bit	Access	Description	Default
EGR0_PTP_DOMAIN_RANGE_LOWER	15:8	R/W	Lower range of PTP domain field to match	0x00
EGR0_PTP_DOMAIN_RANGE_ENA	0	R/W	Enable PTP domain range checking	0x0

4.9.11.7 ETHERNET_COMPARATOR:EGR0_PTP_FLOW:EGR0_PTP_ACTION

Parent: ETHERNET_COMPARATOR:EGR0_PTP_FLOW

Instances: 1

Table 294 • **Fields in EGR0_PTP_ACTION**

Field Name	Bit	Access	Description	Default
EGR0_PTP_MOD_FRAME_STAT_UPDATE	28	R/W	Modified frame status update 0: Do not signal the rewriter to update value of the Modified Frame Status bit 1: Signal the rewriter to update value of the Modified Frame Status bit	0x0
EGR0_PTP_MOD_FRAME_BYTE_OFFSET	26:24	R/W	Indicates the position relative to the start of the PTP frame in bytes where the Modified Frame Status bit resides	0x0
EGR0_PTP_SUB_DELAY_ASYM_ENA	21	R/W	Enable subtract delay asymmetry signal 0: Do not signal the timestamp block to subtract the asymmetry delay 1: Signal the timestamp block to subtract the asymmetry delay	0x0
EGR0_PTP_ADD_DELAY_ASYM_ENA	20	R/W	Enable add delay asymmetry signal 0: Do not signal the timestamp block to add the asymmetry delay 1: Signal the timestamp block to add the asymmetry delay	0x0
EGR0_PTP_TIME_STRG_FIELD_OFFSET	15:10	R/W	Time storage field offset The location in a PTP frame where a time value can be stored or read	0x00
EGR0_PTP_CORR_FIELD_OFFSET	9:5	R/W	Points to the location of the correction field for updating the timestamp. Location is relative to the first byte of the PTP/OAM header. **Note:** If this flow is being used to match OAM frames, set this register to 4	0x00
EGR0_PTP_SAVE_LOCAL_TIME	4	R/W	Enable saving time 0: Do not save the time to the timestamp FIFO 1: Save the local time to the timestamp FIFO	0x0

Table 294 • **Fields in EGR0_PTP_ACTION *(continued)***

Field Name	Bit	Access	Description	Default
EGR0_PTP_COMMAND	3:0	R/W	PTP action command 0: NOP 1: SUB 2: SUB_P2P 3: ADD 4: SUB_ADD 5: WRITE_1588 6: WRITE_P2P (deprecated) 7: WRITE_NS 8: WRITE_NS_P2P	0x0

4.9.11.8 ETHERNET_COMPARATOR:EGR0_PTP_FLOW:EGR0_PTP_ACTION_2

Parent: ETHERNET_COMPARATOR:EGR0_PTP_FLOW

Instances: 1

Table 295 • **Fields in EGR0_PTP_ACTION_2**

Field Name	Bit	Access	Description	Default
EGR0_PTP_NEW_CF_LOC	23:16	R/W	Location of the new correction field relative to the PTP header start. Only even values are allowed.	0x00
EGR0_PTP_REWRITE_OFFSET	15:8	R/W	Points to where in the frame relative to the SFD that the timestamp should be updated	0x00
EGR0_PTP_REWRITE_BYTES	3:0	R/W	Number of bytes in the PTP or OAM frame that must be modified by the rewriter for the timestamp	0x0

4.9.11.9 ETHERNET_COMPARATOR:EGR0_PTP_FLOW:EGR0_PTP_ZERO_FIELD_CTL

Parent: ETHERNET_COMPARATOR:EGR0_PTP_FLOW

Instances: 1

Table 296 • **Fields in EGR0_PTP_ZERO_FIELD_CTL**

Field Name	Bit	Access	Description	Default
EGR0_PTP_ZERO_FIELD_OFFSET	13:8	R/W	Points to a location in the PTP/OAM frame relative to the start of the PTP header that will be zeroed if this function is enabled	0x00
EGR0_PTP_ZERO_FIELD_BYTE_CNT	3:0	R/W	The number of bytes to be zeroed. If this field is 0, then this function is not enabled.	0x0

4.9.12 ETHERNET_COMPARATOR:EGR0_PTP_IP_CHKSUM_CTL

Parent: Egress0 Ethernet Comparator

Instances: 1

Table 297 • **Registers in EGR0_PTP_IP_CHKSUM_CTL**

Register Name	Offset within Register Group	Instances and Address Spacing	Description	Details
EGR0_PTP_IP_CKSUM_SEL	0x00000000	1	IP checksum block select	Page 209

4.9.12.1 ETHERNET_COMPARATOR:EGR0_PTP_IP_CHKSUM_CTL:EGR0_PTP_IP_CKSUM_SEL

Parent: ETHERNET_COMPARATOR:EGR0_PTP_IP_CHKSUM_CTL

Instances: 1

Table 298 • **Fields in EGR0_PTP_IP_CKSUM_SEL**

Field Name	Bit	Access	Description	Default
EGR0_PTP_IP_CHKSUM_SEL	0	R/W	IP checksum controls selection 0: Use the IP checksum controls from IP comparator 1 1: Use the IP checksum controls from IP comparator 2	0x0

4.9.13 ETHERNET_COMPARATOR:EGR0_FRAME_SIG_CFG

Parent: Egress0 Ethernet Comparator

Instances: 1

Table 299 • **Registers in EGR0_FRAME_SIG_CFG**

Register Name	Offset within Register Group	Instances and Address Spacing	Description	Details
EGR0_FSB_CFG	0x00000000	1	Frame signature builder mode configuration	Page 209
EGR0_FSB_MAP_REG_0	0x00000004	1	Frame signature builder mapping register 0	Page 210
EGR0_FSB_MAP_REG_1	0x00000008	1	Frame signature builder mapping register 1	Page 210
EGR0_FSB_MAP_REG_2	0x0000000C	1	Frame signature builder mapping register 2	Page 211
EGR0_FSB_MAP_REG_3	0x00000010	1	Frame signature builder mapping register 3	Page 211

4.9.13.1 ETHERNET_COMPARATOR:EGR0_FRAME_SIG_CFG:EGR0_FSB_CFG

Parent: ETHERNET_COMPARATOR:EGR0_FRAME_SIG_CFG

Instances: 1

Table 300 • **Fields in EGR0_FSB_CFG**

Field Name	Bit	Access	Description	Default
EGR0_FSB_ADR_SEL	1:0	R/W	0: Use the address from Ethernet block 1 1: Use the address from Ethernet block 2 2: Use the address from IP block 1 3: Use the address from IP block 2	0x0

4.9.13.2 ETHERNET_COMPARATOR:EGR0_FRAME_SIG_CFG:EGR0_FSB_MAP_REG_0

Parent: ETHERNET_COMPARATOR:EGR0_FRAME_SIG_CFG

Instances: 1

This register selects bytes to pack into the frame signature vector. The frame signature vector is 16 bytes long. The source bytes are as follows:

select	source	select	source	select	source	select	source
0	PTP hdr byte 31	1	PTP hdr byte 30	2	PTP hdr byte 29	3	PTP hdr byte 28
4	PTP hdr byte 27	5	PTP hdr byte 26	6	PTP hdr byte 25	7	PTP hdr byte 24
8	PTP hdr byte 23	9	PTP hdr byte 22	10	PTP hdr byte 21	11	PTP hdr byte 20
12	PTP hdr byte 19	13	PTP hdr byte 18	14	PTP hdr byte 17	15	PTP hdr byte 16
16	PTP hdr byte 15	17	PTP hdr byte 14	18	PTP hdr byte 13	19	PTP hdr byte 12
20	PTP hdr byte 11	21	PTP hdr byte 10	22	PTP hdr byte 9	23	PTP hdr byte 8
24	PTP hdr byte 6	25	PTP hdr byte 4	26	PTP hdr byte 0	27	reserved
28	address byte 0	29	address byte 1	30	addess byte 2	31	address byte 3
32	address byte 4	33	address byte 5	34	addess byte 6	35	address byte 7

all other select values reserved

Table 301 • **Fields in EGR0_FSB_MAP_REG_0**

Field Name	Bit	Access	Description	Default
EGR0_FSB_MAP_4	29:24	R/W	Frame signature byte 4 select	0x04
EGR0_FSB_MAP_3	23:18	R/W	Frame signature byte 3 select	0x03
EGR0_FSB_MAP_2	17:12	R/W	Frame signature byte 2 select	0x02
EGR0_FSB_MAP_1	11:6	R/W	Frame signature byte 1 select	0x01
EGR0_FSB_MAP_0	5:0	R/W	Frame signature byte 0 select	0x00

4.9.13.3 ETHERNET_COMPARATOR:EGR0_FRAME_SIG_CFG:EGR0_FSB_MAP_REG_1

Parent: ETHERNET_COMPARATOR:EGR0_FRAME_SIG_CFG

Instances: 1

Table 302 • **Fields in EGR0_FSB_MAP_REG_1**

Field Name	Bit	Access	Description	Default
EGR0_FSB_MAP_9	29:24	R/W	Frame signature byte 9 select	0x09
EGR0_FSB_MAP_8	23:18	R/W	Frame signature byte 8 select	0x08
EGR0_FSB_MAP_7	17:12	R/W	Frame signature byte 7 select	0x07
EGR0_FSB_MAP_6	11:6	R/W	Frame signature byte 6 select	0x06
EGR0_FSB_MAP_5	5:0	R/W	Frame signature byte 5 select	0x05

4.9.13.4 ETHERNET_COMPARATOR:EGR0_FRAME_SIG_CFG:EGR0_FSB_MAP_REG_2

Parent: ETHERNET_COMPARATOR:EGR0_FRAME_SIG_CFG

Instances: 1

Table 303 • **Fields in EGR0_FSB_MAP_REG_2**

Field Name	Bit	Access	Description	Default
EGR0_FSB_MAP_14	29:24	R/W	Frame signature byte 14 select	0x0E
EGR0_FSB_MAP_13	23:18	R/W	Frame signature byte 13 select	0x0D
EGR0_FSB_MAP_12	17:12	R/W	Frame signature byte 12 select	0x0C
EGR0_FSB_MAP_11	11:6	R/W	Frame signature byte 11 select	0x0B
EGR0_FSB_MAP_10	5:0	R/W	Frame signature byte 10 select	0x0A

4.9.13.5 ETHERNET_COMPARATOR:EGR0_FRAME_SIG_CFG:EGR0_FSB_MAP_REG_3

Parent: ETHERNET_COMPARATOR:EGR0_FRAME_SIG_CFG

Instances: 1

Table 304 • **Fields in EGR0_FSB_MAP_REG_3**

Field Name	Bit	Access	Description	Default
EGR0_FSB_MAP_15	5:0	R/W	Frame signature byte 15 select	0x0F

4.10 Ingress0 Ethernet Comparator

Table 305 • **Register Groups in Ingress0 Ethernet Comparator**

Register Group Name	Offset within Target	Instances and Address Spacing	Description	Details
INGR0_ETH1_NXT_PROTOCOL	0x00000000	1	Ethernet next protocol configuration	Page 212

Table 305 • **Register Groups in Ingress0 Ethernet Comparator *(continued)***

Register Group Name	Offset within Target	Instances and Address Spacing	Description	Details
INGR0_ETH1_FLOW_CFG	0x00000040	8 0x00000040	Ethernet flow configuration	Page 214
INGR0_ETH2_NXT_PROTOCOL	0x00000240	1	Ethernet next protocol configuration	Page 217
INGR0_ETH2_FLOW_CFG	0x00000280	8 0x00000040	Ethernet flow configuration	Page 219
INGR0_MPLS_NXT_COMPARATOR	0x00000480	1	MPLS next protocol register	Page 222
INGR0_MPLS_FLOW_CFG	0x000004C0	8 0x00000040	MPLS flow configuration	Page 223
INGR0_IP1_NXT_PROTOCOL	0x000006C0	1	IP1 next protocol	Page 226
INGR0_IP1_FLOW_CFG	0x00000700	8 0x00000040	IP1 flow configuration	Page 230
INGR0_IP2_NXT_PROTOCOL	0x00000900	1	IP2 next protocol	Page 233
INGR0_IP2_FLOW_CFG	0x00000940	8 0x00000040	IP2 flow configuration	Page 237
INGR0_PTP_FLOW	0x00000B40	6 0x00000040	PTP flow configuration	Page 241
INGR0_PTP_IP_CHKSUM_CTL	0x00000CC0	1	IP checksum field control	Page 245

4.10.1 ETHERNET_COMPARATOR:INGR0_ETH1_NXT_PROTOCOL

Parent: Egress0 Ethernet Comparator

Instances: 1

Table 306 • **Registers in INGR0_ETH1_NXT_PROTOCOL**

Register Name	Offset within Register Group	Instances and Address Spacing	Description	Details
INGR0_ETH1_NXT_PROTOCOL	0x00000000	1	Ethernet next protocol register	Page 212
INGR0_ETH1_VLAN_TPID_CFG	0x00000004	1	VLAN TPID configuration	Page 213
INGR0_ETH1_TAG_MODE	0x00000008	1	Ethernet tag mode	Page 213
INGR0_ETH1_ETYPE_MATCH	0x0000000C	1	Ethertype match register	Page 213

4.10.1.1 ETHERNET_COMPARATOR:INGR0_ETH1_NXT_PROTOCOL:INGR0_ETH1_NXT_PROTOCOL

Parent: ETHERNET_COMPARATOR:INGR0_ETH1_NXT_PROTOCOL

Instances: 1

Table 307 • **Fields in INGR0_ETH1_NXT_PROTOCOL**

Field Name	Bit	Access	Description	Default
INGR0_ETH1_FRAME_SIG_OFFSET	20:16	R/W	Frame signature offset. Points to the start of the byte field in the Ethernet frame that will be used for the frame signature.	0x00
INGR0_ETH1_NXT_COMPARATOR	2:0	R/W	Points to the next comparator block after this Ethernet block 0: Reserved 1: Ethernet comparator 2 2: IP/UDP/ACH comparator 1 3: IP/UDP/ACH comparator 2 4: MPLS comparator 5: PTP/OAM comparator 6,7: Reserved	0x0

4.10.1.2 ETHERNET_COMPARATOR:INGR0_ETH1_NXT_PROTOCOL:INGR0_ETH1_VLAN_TPID_CFG

Parent: ETHERNET_COMPARATOR:INGR0_ETH1_NXT_PROTOCOL

Instances: 1

Table 308 • **Fields in INGR0_ETH1_VLAN_TPID_CFG**

Field Name	Bit	Access	Description	Default
INGR0_ETH1_VLAN_TPID_CFG	31:16	R/W	Configurable VLAN TPID (S or B-tag)	0x88A8

4.10.1.3 ETHERNET_COMPARATOR:INGR0_ETH1_NXT_PROTOCOL:INGR0_ETH1_TAG_MODE

Parent: ETHERNET_COMPARATOR:INGR0_ETH1_NXT_PROTOCOL

Instances: 1

Table 309 • **Fields in INGR0_ETH1_TAG_MODE**

Field Name	Bit	Access	Description	Default
INGR0_ETH1_PBB_ENA	0	R/W	This bit enables the presence of PBB. The I-tag match bits are programmed in the ETH1_VLAN_TAG_RANGE registers. The mask bits are programmed in the ETH1_VLAN_TAG2 registers. A B-tag if present is configured in the ETH1_VLAN_TAG1 registers. 0: PBB not enabled 1: Always expect PBB, last tag is always an I-tag	0x0

4.10.1.4 ETHERNET_COMPARATOR:INGR0_ETH1_NXT_PROTOCOL:INGR0_ETH1_ETYPE_MATCH

Parent: ETHERNET_COMPARATOR:INGR0_ETH1_NXT_PROTOCOL

Instances: 1

Table 310 • **Fields in INGR0_ETH1_ETYPE_MATCH**

Field Name	Bit	Access	Description	Default
INGR0_ETH1_ETYPE_MATCH	15:0	R/W	If the Ethertype/length field is an Ethertype, then this register is compared against the value. If the field is a length, the length value is not checked.	0x0000

4.10.2 ETHERNET_COMPARATOR:INGR0_ETH1_FLOW_CFG

Parent: Egress0 Ethernet Comparator

Instances: 8

Table 311 • **Registers in INGR0_ETH1_FLOW_CFG**

Register Name	Offset within Register Group	Instances and Address Spacing	Description	Details
INGR0_ETH1_FLOW_ENABLE	0x00000000	1	Ethernet flow enable	Page 214
INGR0_ETH1_MATCH_MODE	0x00000004	1	Ethernet protocol match mode	Page 215
INGR0_ETH1_ADDR_MATCH_1	0x00000008	1	Ethernet address match part 1	Page 216
INGR0_ETH1_ADDR_MATCH_2	0x0000000C	1	Ethernet address match part 2	Page 216
INGR0_ETH1_VLAN_TAG_RANGE_I_TAG	0x00000010	1	Ethernet VLAN tag range match register	Page 216
INGR0_ETH1_VLAN_TAG1	0x00000014	1	VLAN tag 1 match/mask	Page 217
INGR0_ETH1_VLAN_TAG2_I_TAG	0x00000018	1	Match/mask for VLAN tag 2 or I-tag match	Page 217

4.10.2.1 ETHERNET_COMPARATOR:INGR0_ETH1_FLOW_CFG:INGR0_ETH1_FLOW_ENABLE

Parent: ETHERNET_COMPARATOR:INGR0_ETH1_FLOW_CFG

Instances: 1

Table 312 • **Fields in INGR0_ETH1_FLOW_ENABLE**

Field Name	Bit	Access	Description	Default
INGR0_ETH1_CHANNEL_MASK	9:8	R/W	Channel mask 0x0: Flow invalid 0x1: Flow valid for channel 0 0x2: Flow valid for channel 1 0x3: Flow valid for both channels	0x3
INGR0_ETH1_FLOW_ENABLE	0	R/W	Flow enable 0: Flow disabled 1: Flow enabled	0x0

4.10.2.2 ETHERNET_COMPARATOR:INGR0_ETH1_FLOW_CFG:INGR0_ETH1_MATCH_MODE

Parent: ETHERNET_COMPARATOR:INGR0_ETH1_FLOW_CFG

Instances: 1

Table 313 • **Fields in INGR0_ETH1_MATCH_MODE**

Field Name	Bit	Access	Description	Default
INGR0_ETH1_VLAN_TAG_MODE	13:12	R/W	VLAN tag mode configuration 0: VLAN range checking disabled 1: VLAN range checking on tag 1 2: VLAN range checking on tag 2 (not supported with PBB) 3: Reserved	0x0
INGR0_ETH1_VLAN_TAG2_TYPE	9	R/W	VLAN tag2 type This register is only used if ETH1_VLAN_VERIFY_ENA = 1 If PBB not enabled: 0: C tag (TPID of 0x8100) 1: S tag (match to CONF_VLAN_TPID) If PBB enabled: 0,1: I tag (use range registers)	0x1
INGR0_ETH1_VLAN_TAG1_TYPE	8	R/W	VLAN tag1 type This register is only used if ETH1_VLAN_VERIFY_ENA = 1 0: C tag (TPID of 0x8100) 1: S or B tag (match to CONF_VLAN_TPID)	0x0
INGR0_ETH1_VLAN_TAGS	7:6	R/W	VLAN tags This register is only used if ETH1_VLAN_VERIFY_ENA = 1 0: No VLAN tags (not valid for PBB) 1: 1 VLAN tag (for PBB this would be the I-tag) 2: 2 VLAN tags (for PBB expect a B-tag and an I-tag) 3: Reserved	0x0
INGR0_ETH1_VLAN_VERIFY_ENA	4	R/W	Verify VLAN tags 0: Parse for VLAN tags, do not check values. For PBB the I-tag is always checked. 1: Verify configured VLAN tag configuration.	0x0
INGR0_ETH1_ETHERTYPE_MODE	0	R/W	VLAN tag verification configuration When checking for presence of SNAP/LLC based upon ETH1_MATCH_MODE, this field indicates if SNAP and 3-byte LLC is expected to be present. 0: Only Ethernet type II supported, no SNAP/LLC 1: Ethernet type II and Ethernet type I with SNAP/LLC, determine if SNAP/LLC is present or not. Type I always assumes that SNAP/LLC is present.	0x0

4.10.2.3 ETHERNET_COMPARATOR:INGR0_ETH1_FLOW_CFG:INGR0_ETH1_ADDR_MATCH_1

Parent: ETHERNET_COMPARATOR:INGR0_ETH1_FLOW_CFG

Instances: 1

Table 314 • **Fields in INGR0_ETH1_ADDR_MATCH_1**

Field Name	Bit	Access	Description	Default
INGR0_ETH1_ADDR_MATCH_1	31:0	R/W	First 32 bits of the address match value	0x00000000

4.10.2.4 ETHERNET_COMPARATOR:INGR0_ETH1_FLOW_CFG:INGR0_ETH1_ADDR_MATCH_2

Parent: ETHERNET_COMPARATOR:INGR0_ETH1_FLOW_CFG

Instances: 1

Table 315 • **Fields in INGR0_ETH1_ADDR_MATCH_2**

Field Name	Bit	Access	Description	Default
INGR0_ETH1_ADDR_MATCH_MODE	22:20	R/W	Selects how the addresses are matched. One-hot encoded. Multiple bits can be set at once. 0: Full 48-bit address match 1: Match any unicast address 2: Match any mulitcast address	0x1
INGR0_ETH1_ADDR_MATCH_SELECT	17:16	R/W	Selects which address to match 0: Match the destination address 1: Match the source address 2: Match either the source of destination address 3: Reserved	0x0
INGR0_ETH1_ADDR_MATCH_2	15:0	R/W	Last 16 bits of the Ethernet address match field	0x0000

4.10.2.5 ETHERNET_COMPARATOR:INGR0_ETH1_FLOW_CFG:INGR0_ETH1_VLAN_TAG_RANGE_I_TAG

Parent: ETHERNET_COMPARATOR:INGR0_ETH1_FLOW_CFG

Instances: 1

Table 316 • **Fields in INGR0_ETH1_VLAN_TAG_RANGE_I_TAG**

Field Name	Bit	Access	Description	Default
INGR0_ETH1_VLAN_TAG_RANGE_UPPER	27:16	R/W	If PBB mode is not enabled, then this register contains the upper range of the VLAN tag range match. If PBB mode is enabled, then this register contains the upper 12 bits of the I-tag.	0xFFF

Table 316 • **Fields in INGR0_ETH1_VLAN_TAG_RANGE_I_TAG *(continued)***

Field Name	Bit	Access	Description	Default
INGR0_ETH1_VLAN_TAG_RANGE_LOWER	11:0	R/W	If PBB mode is not enabled, then this register contains the lower range of the VLAN tag range match. If PBB mode is enabled, then this register contains the lower 12 bits of the I-tag.	0x000

4.10.2.6 ETHERNET_COMPARATOR:INGR0_ETH1_FLOW_CFG:INGR0_ETH1_VLAN_TAG1

Parent: ETHERNET_COMPARATOR:INGR0_ETH1_FLOW_CFG

Instances: 1

Table 317 • **Fields in INGR0_ETH1_VLAN_TAG1**

Field Name	Bit	Access	Description	Default
INGR0_ETH1_VLAN_TAG1_MASK	27:16	R/W	Mask value for VLAN tag 1	0xFFF
INGR0_ETH1_VLAN_TAG1_MATCH	11:0	R/W	Match value for the first VLAN tag	0x000

4.10.2.7 ETHERNET_COMPARATOR:INGR0_ETH1_FLOW_CFG:INGR0_ETH1_VLAN_TAG2_I_TAG

Parent: ETHERNET_COMPARATOR:INGR0_ETH1_FLOW_CFG

Instances: 1

Table 318 • **Fields in INGR0_ETH1_VLAN_TAG2_I_TAG**

Field Name	Bit	Access	Description	Default
INGR0_ETH1_VLAN_TAG2_MASK	27:16	R/W	When PBB is not enabled, the mask field for VLAN tag 2. When PBB is enabled, the upper 12 bits of the I-tag mask.	0xFFF
INGR0_ETH1_VLAN_TAG2_MATCH	11:0	R/W	When PBB is not enabled, the match field for VLAN Tag 2. When PBB is enabled, the lower 12 bits of the I-tag mask field.	0x000

4.10.3 ETHERNET_COMPARATOR:INGR0_ETH2_NXT_PROTOCOL

Parent: Egress0 Ethernet Comparator

Instances: 1

Table 319 • **Registers in INGR0_ETH2_NXT_PROTOCOL**

Register Name	Offset within Register Group	Instances and Address Spacing	Description	Details
INGR0_ETH2_NXT_PROTOCOL	0x00000000	1	Ethernet next protocol register	Page 218
INGR0_ETH2_VLAN_TPID_CFG	0x00000004	1	VLAN TPID configuration	Page 218
INGR0_ETH2_ETYPE_MATCH	0x00000008	1	Ethertype match register	Page 218

4.10.3.1 ETHERNET_COMPARATOR:INGR0_ETH2_NXT_PROTOCOL:INGR0_ETH2_NXT_PROTOCOL

Parent: ETHERNET_COMPARATOR:INGR0_ETH2_NXT_PROTOCOL

Instances: 1

Table 320 • **Fields in INGR0_ETH2_NXT_PROTOCOL**

Field Name	Bit	Access	Description	Default
INGR0_ETH2_FRAME_SIG_OFFSET	20:16	R/W	Frame signature offset. Points to the start of the byte field in the Ethernet frame that will be used for the frame signature.	0x00
INGR0_ETH2_NXT_COMPARATOR	2:0	R/W	Points to the next comparator block after this Ethernet block. If this comparator block is not used, this field must be set to 0. 0: Comparator block not used 1: Ethernet comparator 2 2: IP/UDP/ACH comparator 1 3: IP/UDP/ACH comparator 2 4: MPLS comparator 5: PTP/OAM comparator 6,7: Reserved	0x0

4.10.3.2 ETHERNET_COMPARATOR:INGR0_ETH2_NXT_PROTOCOL:INGR0_ETH2_VLAN_TPID_CFG

Parent: ETHERNET_COMPARATOR:INGR0_ETH2_NXT_PROTOCOL

Instances: 1

Table 321 • **Fields in INGR0_ETH2_VLAN_TPID_CFG**

Field Name	Bit	Access	Description	Default
INGR0_ETH2_VLAN_TPID_CFG	31:16	R/W	Configurable S-tag TPID	0x88A8

4.10.3.3 ETHERNET_COMPARATOR:INGR0_ETH2_NXT_PROTOCOL:INGR0_ETH2_ETYPE_MATCH

Parent: ETHERNET_COMPARATOR:INGR0_ETH2_NXT_PROTOCOL

Instances: 1

Table 322 • **Fields in INGR0_ETH2_ETYPE_MATCH**

Field Name	Bit	Access	Description	Default
INGR0_ETH2_ETYPE_MATCH	15:0	R/W	If the Ethertype/length field is an Ethertype, then this register is compared against the value. If the field is a length, the length value is not checked.	0x0000

4.10.4 ETHERNET_COMPARATOR:INGR0_ETH2_FLOW_CFG

Parent: Egress0 Ethernet Comparator

Instances: 8

Table 323 • **Registers in INGR0_ETH2_FLOW_CFG**

Register Name	Offset within Register Group	Instances and Address Spacing	Description	Details
INGR0_ETH2_FLOW_ENABLE	0x00000000	1	Ethernet flow enable	Page 219
INGR0_ETH2_MATCH_MODE	0x00000004	1	Ethernet protocol match mode	Page 220
INGR0_ETH2_ADDR_MATCH_1	0x00000008	1	Ethernet address match part 1	Page 220
INGR0_ETH2_ADDR_MATCH_2	0x0000000C	1	Ethernet address match part 2	Page 221
INGR0_ETH2_VLAN_TAG_RANGE_I_TAG	0x00000010	1	Ethernet VLAN tag range match register	Page 221
INGR0_ETH2_VLAN_TAG1	0x00000014	1	VLAN tag 1 match/mask	Page 221
INGR0_ETH2_VLAN_TAG2_I_TAG	0x00000018	1	Match/mask for VLAN tag 2 or I-tag match	Page 222

4.10.4.1 ETHERNET_COMPARATOR:INGR0_ETH2_FLOW_CFG:INGR0_ETH2_FLOW_ENABLE

Parent: ETHERNET_COMPARATOR:INGR0_ETH2_FLOW_CFG

Instances: 1

Table 324 • **Fields in INGR0_ETH2_FLOW_ENABLE**

Field Name	Bit	Access	Description	Default
INGR0_ETH2_CHANNEL_MASK	9:8	R/W	Channel mask 0x0: Flow invalid 0x1: Flow valid for channel 0 0x2: Flow valid for channel 1 0x3: Flow valid for both channels	0x3
INGR0_ETH2_FLOW_ENABLE	0	R/W	Flow enable. If this comparator block is not used, all flow enable bits must be set to 0. 0: Flow disabled 1: Flow enabled	0x0

4.10.4.2 ETHERNET_COMPARATOR:INGR0_ETH2_FLOW_CFG:INGR0_ETH2_MATCH_MODE

Parent: ETHERNET_COMPARATOR:INGR0_ETH2_FLOW_CFG

Instances: 1

Table 325 • **Fields in INGR0_ETH2_MATCH_MODE**

Field Name	Bit	Access	Description	Default
INGR0_ETH2_VLAN_TAG_MODE	13:12	R/W	VLAN tag mode configuration 0: VLAN range checking disabled 1: VLAN range checking on tag 1 2: VLAN range checking on tag 2 (not supported with PBB) 3: Reserved	0x0
INGR0_ETH2_VLAN_TAG2_TYPE	9	R/W	VLAN tag2 type This register is only used if ETH1_VLAN_VERIFY_ENA = 1 0: C tag (TPID of 0x8100) 1: S tag (match to CONF_VLAN_TPID)	0x1
INGR0_ETH2_VLAN_TAG1_TYPE	8	R/W	VLAN tag1 type This register is only used if ETH1_VLAN_VERIFY_ENA = 1 0: C tag (TPID of 0x8100) 1: S or B tag (match to CONF_VLAN_TPID)	0x0
INGR0_ETH2_VLAN_TAGS	7:6	R/W	VLAN tags This register is only used if ETH2_VLAN_VERIFY_ENA = 1 0: No VLAN tags 1: 1 VLAN tag 2: 2 VLAN tags 3: Reserved	0x0
INGR0_ETH2_VLAN_VERIFY_ENA	4	R/W	Verify VLAN tags 0: Parse for VLAN tags, do not check values. 1: Verify configured VLAN tag configuration.	0x0
INGR0_ETH2_ETHERTYPE_MODE	0	R/W	VLAN tag verification configuration When checking for presence of SNAP/LLC based upon ETH1_MATCH_MODE, this field indicates if SNAP and 3-byte LLC is expected to be present. 0: Only Ethernet type II supported, no SNAP/LLC 1: Ethernet type II and Ethernet type I with SNAP/LLC, determine if SNAP/LLC is present or not. Type I always assumes that SNAP/LLC is present.	0x0

4.10.4.3 ETHERNET_COMPARATOR:INGR0_ETH2_FLOW_CFG:INGR0_ETH2_ADDR_MATCH_1

Parent: ETHERNET_COMPARATOR:INGR0_ETH2_FLOW_CFG

Instances: 1

Table 326 • **Fields in INGR0_ETH2_ADDR_MATCH_1**

Field Name	Bit	Access	Description	Default
INGR0_ETH2_ADDR_MATCH_1	31:0	R/W	First 32 bits of the address match value	0x00000000

4.10.4.4 ETHERNET_COMPARATOR:INGR0_ETH2_FLOW_CFG:INGR0_ETH2_ADDR_MATCH_2

Parent: ETHERNET_COMPARATOR:INGR0_ETH2_FLOW_CFG

Instances: 1

Table 327 • **Fields in INGR0_ETH2_ADDR_MATCH_2**

Field Name	Bit	Access	Description	Default
INGR0_ETH2_ADDR_MATCH_MODE	22:20	R/W	Selects how the addresses are matched. One-hot encoded. Multiple bits can be set at once. 0: Full 48-bit address match 1: Match any unicast address 2: Match any mulitcast address	0x1
INGR0_ETH2_ADDR_MATCH_SELECT	17:16	R/W	Selects which address to match 0: Match the destination address 1: Match the source address 2: Match either the source of destination address 3: Reserved	0x0
INGR0_ETH2_ADDR_MATCH_2	15:0	R/W	Last 16 bits of the Ethernet address match field	0x0000

4.10.4.5 ETHERNET_COMPARATOR:INGR0_ETH2_FLOW_CFG:INGR0_ETH2_VLAN_TAG_RANGE_I_TAG

Parent: ETHERNET_COMPARATOR:INGR0_ETH2_FLOW_CFG

Instances: 1

Table 328 • **Fields in INGR0_ETH2_VLAN_TAG_RANGE_I_TAG**

Field Name	Bit	Access	Description	Default
INGR0_ETH2_VLAN_TAG_RANGE_UPPER	27:16	R/W	Contains the upper range of the VLAN tag range match	0xFFF
INGR0_ETH2_VLAN_TAG_RANGE_LOWER	11:0	R/W	Contains the lower range of the VLAN tag range match	0x000

4.10.4.6 ETHERNET_COMPARATOR:INGR0_ETH2_FLOW_CFG:INGR0_ETH2_VLAN_TAG1

Parent: ETHERNET_COMPARATOR:INGR0_ETH2_FLOW_CFG

Instances: 1

Table 329 • **Fields in INGR0_ETH2_VLAN_TAG1**

Field Name	Bit	Access	Description	Default
INGR0_ETH2_VLAN_TAG1_MASK	27:16	R/W	Mask value for VLAN tag 1	0xFFF
INGR0_ETH2_VLAN_TAG1_MATCH	11:0	R/W	Match value for the first VLAN tag	0x000

4.10.4.7 ETHERNET_COMPARATOR:INGR0_ETH2_FLOW_CFG:INGR0_ETH2_VLAN_TAG2_I_TAG

Parent: ETHERNET_COMPARATOR:INGR0_ETH2_FLOW_CFG

Instances: 1

Table 330 • **Fields in INGR0_ETH2_VLAN_TAG2_I_TAG**

Field Name	Bit	Access	Description	Default
INGR0_ETH2_VLAN_TAG2_MASK	27:16	R/W	Mask field for VLAN tag 2	0xFFF
INGR0_ETH2_VLAN_TAG2_MATCH	11:0	R/W	Match field for VLAN Tag 2	0x000

4.10.5 ETHERNET_COMPARATOR:INGR0_MPLS_NXT_COMPARATOR

Parent: Egress0 Ethernet Comparator

Instances: 1

Table 331 • **Registers in INGR0_MPLS_NXT_COMPARATOR**

Register Name	Offset within Register Group	Instances and Address Spacing	Description	Details
INGR0_MPLS_NXT_COMPARATOR	0x00000000	1	MPLS next protocol comparator register	Page 222

4.10.5.1 ETHERNET_COMPARATOR:INGR0_MPLS_NXT_COMPARATOR:INGR0_MPLS_NXT_COMPARATOR

Parent: ETHERNET_COMPARATOR:INGR0_MPLS_NXT_COMPARATOR

Instances: 1

Table 332 • **Fields in INGR0_MPLS_NXT_COMPARATOR**

Field Name	Bit	Access	Description	Default
INGR0_MPLS_CTL_WORD	16	R/W	Indicates the presence of a control word after the last label. The first 4 bits of the control word are always 0. 0: No control word after the last label 1: Control word after the last label	0x0
INGR0_MPLS_NXT_COMPARATOR	2:0	R/W	Points to the next comparator stage. If this comparator block is not used, this field must be set to 0. 0: Comparator block not used. 1: Ethernet comparator 2 2: IP/UDP/ACH comparator 1 3: IP/UDP/ACH comparator 2 4: Reserved 5: PTP/OAM comparator 6,7: Reserved	0x0

4.10.6 ETHERNET_COMPARATOR:INGR0_MPLS_FLOW_CFG

Parent: Egress0 Ethernet Comparator

Instances: 8

Table 333 • **Registers in INGR0_MPLS_FLOW_CFG**

Register Name	Offset within Register Group	Instances and Address Spacing	Description	Details
INGR0_MPLS_FLOW_CONTROL	0x00000000	1	MPLS flow control register	Page 224
INGR0_MPLS_LABEL_RANGE_LOWER_0	0x00000008	1	MPLS label 0 match range lower value	Page 224
INGR0_MPLS_LABEL_RANGE_UPPER_0	0x0000000C	1	MPLS label 0 match range upper value	Page 224
INGR0_MPLS_LABEL_RANGE_LOWER_1	0x00000010	1	MPLS label 1 match range lower value	Page 225
INGR0_MPLS_LABEL_RANGE_UPPER_1	0x00000014	1	MPLS label 1 match range upper value	Page 225
INGR0_MPLS_LABEL_RANGE_LOWER_2	0x00000018	1	MPLS label 2 match range lower value	Page 225
INGR0_MPLS_LABEL_RANGE_UPPER_2	0x0000001C	1	MPLS label 2 match range upper value	Page 225
INGR0_MPLS_LABEL_RANGE_LOWER_3	0x00000020	1	MPLS label 3 match range lower value	Page 226
INGR0_MPLS_LABEL_RANGE_UPPER_3	0x00000024	1	MPLS label 3 match range upper value	Page 226

4.10.6.1 ETHERNET_COMPARATOR:INGR0_MPLS_FLOW_CFG:INGR0_MPLS_FLOW_CONTROL

Parent: ETHERNET_COMPARATOR:INGR0_MPLS_FLOW_CFG

Instances: 1

Table 334 • **Fields in INGR0_MPLS_FLOW_CONTROL**

Field Name	Bit	Access	Description	Default
INGR0_MPLS_CHANNEL_MASK	25:24	R/W	MPLS channel mask selector 0x0: Flow invalid 0x1: Flow valid for channel 0 0x2: Flow valid for channel 1 0x3: Flow valid for both channels	0x3
INGR0_MPLS_STACK_DEPTH	19:16	R/W	Stack depth configuration Defines the allowable stack depths for searches. The direction that the stack is referenced is determined by the setting of MPLS_REF_PNT. For each bit set, the following table maps bits to stack depths: 0: Stack allowed to be 1 label deep 1: Stack allowed to be 2 labels deep 2: Stack allowed to be 3 labels deep 3: Stack allowed to be 4 labels deep	0x0
INGR0_MPLS_REF_PNT	4	R/W	Search direction for label matching 0: All searching is performed starting from the top of the stack 1: All searching is performed from the end of the stack	0x0
INGR0_MPLS_FLOW_ENA	0	R/W	Flow enable. If this comparator block is not used, all flow enable bits must be set to 0. 0: Flow is disabled 1: Flow is enabled	0x0

4.10.6.2 ETHERNET_COMPARATOR:INGR0_MPLS_FLOW_CFG:INGR0_MPLS_LABEL_RANGE_LOWER_0

Parent: ETHERNET_COMPARATOR:INGR0_MPLS_FLOW_CFG

Instances: 1

Table 335 • **Fields in INGR0_MPLS_LABEL_RANGE_LOWER_0**

Field Name	Bit	Access	Description	Default
INGR0_MPLS_LABEL_RANGE_LOWER_0	19:0	R/W	Lower value for label 0 match range	0x00000

4.10.6.3 ETHERNET_COMPARATOR:INGR0_MPLS_FLOW_CFG:INGR0_MPLS_LABEL_RANGE_UPPER_0

Parent: ETHERNET_COMPARATOR:INGR0_MPLS_FLOW_CFG

Instances: 1

Table 336 • **Fields in INGR0_MPLS_LABEL_RANGE_UPPER_0**

Field Name	Bit	Access	Description	Default
INGR0_MPLS_LABEL_RANGE_UPPER_0	19:0	R/W	Upper value for label 0 match range	0xFFFFF

4.10.6.4 ETHERNET_COMPARATOR:INGR0_MPLS_FLOW_CFG:INGR0_MPLS_LABEL_RANGE_LOWER_1

Parent: ETHERNET_COMPARATOR:INGR0_MPLS_FLOW_CFG

Instances: 1

Table 337 • **Fields in INGR0_MPLS_LABEL_RANGE_LOWER_1**

Field Name	Bit	Access	Description	Default
INGR0_MPLS_LABEL_RANGE_LOWER_1	19:0	R/W	Lower value for label 1 match range	0x00000

4.10.6.5 ETHERNET_COMPARATOR:INGR0_MPLS_FLOW_CFG:INGR0_MPLS_LABEL_RANGE_UPPER_1

Parent: ETHERNET_COMPARATOR:INGR0_MPLS_FLOW_CFG

Instances: 1

Table 338 • **Fields in INGR0_MPLS_LABEL_RANGE_UPPER_1**

Field Name	Bit	Access	Description	Default
INGR0_MPLS_LABEL_RANGE_UPPER_1	19:0	R/W	Upper value for label 1 match range	0xFFFFF

4.10.6.6 ETHERNET_COMPARATOR:INGR0_MPLS_FLOW_CFG:INGR0_MPLS_LABEL_RANGE_LOWER_2

Parent: ETHERNET_COMPARATOR:INGR0_MPLS_FLOW_CFG

Instances: 1

Table 339 • **Fields in INGR0_MPLS_LABEL_RANGE_LOWER_2**

Field Name	Bit	Access	Description	Default
INGR0_MPLS_LABEL_RANGE_LOWER_2	19:0	R/W	Lower value for label 2 match range	0x00000

4.10.6.7 ETHERNET_COMPARATOR:INGR0_MPLS_FLOW_CFG:INGR0_MPLS_LABEL_RANGE_UPPER_2

Parent: ETHERNET_COMPARATOR:INGR0_MPLS_FLOW_CFG

Instances: 1

Table 340 • **Fields in INGR0_MPLS_LABEL_RANGE_UPPER_2**

Field Name	Bit	Access	Description	Default
INGR0_MPLS_LABEL_RANGE_UPPER_2	19:0	R/W	Upper value for label 2 match range	0xFFFFF

4.10.6.8 ETHERNET_COMPARATOR:INGR0_MPLS_FLOW_CFG:INGR0_MPLS_LABEL_RANGE_LOWER_3

Parent: ETHERNET_COMPARATOR:INGR0_MPLS_FLOW_CFG

Instances: 1

Table 341 • **Fields in INGR0_MPLS_LABEL_RANGE_LOWER_3**

Field Name	Bit	Access	Description	Default
INGR0_MPLS_LABEL_RANGE_LOWER_3	19:0	R/W	Lower value for label 3 match range	0x00000

4.10.6.9 ETHERNET_COMPARATOR:INGR0_MPLS_FLOW_CFG:INGR0_MPLS_LABEL_RANGE_UPPER_3

Parent: ETHERNET_COMPARATOR:INGR0_MPLS_FLOW_CFG

Instances: 1

Table 342 • **Fields in INGR0_MPLS_LABEL_RANGE_UPPER_3**

Field Name	Bit	Access	Description	Default
INGR0_MPLS_LABEL_RANGE_UPPER_3	19:0	R/W	Upper value for label 3 match range	0xFFFFF

4.10.7 ETHERNET_COMPARATOR:INGR0_IP1_NXT_PROTOCOL

Parent: Egress0 Ethernet Comparator

Instances: 1

Table 343 • **Registers in INGR0_IP1_NXT_PROTOCOL**

Register Name	Offset within Register Group	Instances and Address Spacing	Description	Details
INGR0_IP1_NXT_COMPARATOR	0x00000000	1	IP next comparator control register	Page 227
INGR0_IP1_MODE	0x00000004	1	IP comparator mode	Page 227
INGR0_IP1_PROT_MATCH_1	0x00000008	1	IP match register set 1	Page 228
INGR0_IP1_PROT_MATCH_2_UPPER	0x0000000C	1	Upper portion of match register 2	Page 228

Table 343 • **Registers in INGR0_IP1_NXT_PROTOCOL *(continued)***

Register Name	Offset within Register Group	Instances and Address Spacing	Description	Details
INGR0_IP1_PROT_MATCH_2_LOWER	0x00000010	1	Lower portion of match register 2	Page 228
INGR0_IP1_PROT_MASK_2_UPPER	0x00000014	1	Upper portion of match mask register 2	Page 229
INGR0_IP1_PROT_MASK_2_LOWER	0x00000018	1	Lower portion of match mask register 2	Page 229
INGR0_IP1_PROT_OFFSET_2	0x0000001C	1	IP match offset register set 2	Page 229
INGR0_IP1_UDP_CHKSUM_CFG	0x00000020	1	IP/UDP checksum control register	Page 229

4.10.7.1 ETHERNET_COMPARATOR:INGR0_IP1_NXT_PROTOCOL:INGR0_IP1_NXT_COMPARATOR

Parent: ETHERNET_COMPARATOR:INGR0_IP1_NXT_PROTOCOL

Instances: 1

Table 344 • **Fields in INGR0_IP1_NXT_COMPARATOR**

Field Name	Bit	Access	Description	Default
INGR0_IP1_NXT_PROTOCOL	15:8	R/W	Number of bytes in this header, points to the beginning of the next protocol.	0x00
INGR0_IP1_NXT_COMPARATOR	2:0	R/W	Points to the next comparator stage. If this comparator block is not used, this field must be set to 0. 0: Comparator block not used 1: Reserved 2: Reserved 3: IP/UDP/ACH comparator 2 4: Reserved 5: PTP/OAM comparator 6,7: Reserved	0x0

4.10.7.2 ETHERNET_COMPARATOR:INGR0_IP1_NXT_PROTOCOL:INGR0_IP1_MODE

Parent: ETHERNET_COMPARATOR:INGR0_IP1_NXT_PROTOCOL

Instances: 1

Table 345 • **Fields in INGR0_IP1_MODE**

Field Name	Bit	Access	Description	Default
INGR0_IP1_FLOW_OFFSET	12:8	R/W	Points to the source address field in the IP frame. Use 12 for IPv4 and 8 for IPv6.	0x0C

Table 345 • **Fields in INGR0_IP1_MODE *(continued)***

Field Name	Bit	Access	Description	Default
INGR0_IP1_MODE	1:0	R/W	IP mode 0: IPv4 1: IPv6 2: Other protocol, 32-bit address match 3: Other protocol, 128-bit address match	0x0

4.10.7.3 ETHERNET_COMPARATOR:INGR0_IP1_NXT_PROTOCOL:INGR0_IP1_PROT_MATCH_1

Parent: ETHERNET_COMPARATOR:INGR0_IP1_NXT_PROTOCOL

Instances: 1

Table 346 • **Fields in INGR0_IP1_PROT_MATCH_1**

Field Name	Bit	Access	Description	Default
INGR0_IP1_PROT_OFFSET_1	20:16	R/W	Points to the start of this match field relative to the first byte of this protocol	0x00
INGR0_IP1_PROT_MASK_1	15:8	R/W	Mask field for IP_PROT_MATCH_1	0x00
INGR0_IP1_PROT_MATCH_1	7:0	R/W	8-bit match field	0x00

4.10.7.4 ETHERNET_COMPARATOR:INGR0_IP1_NXT_PROTOCOL:INGR0_IP1_PROT_MATCH_2_UPPER

Parent: ETHERNET_COMPARATOR:INGR0_IP1_NXT_PROTOCOL

Instances: 1

Table 347 • **Fields in INGR0_IP1_PROT_MATCH_2_UPPER**

Field Name	Bit	Access	Description	Default
INGR0_IP1_PROT_MATCH_2_UPPER	31:0	R/W	64-bit match register for advancing to the next protocol, upper portion	0x00000000

4.10.7.5 ETHERNET_COMPARATOR:INGR0_IP1_NXT_PROTOCOL:INGR0_IP1_PROT_MATCH_2_LOWER

Parent: ETHERNET_COMPARATOR:INGR0_IP1_NXT_PROTOCOL

Instances: 1

Table 348 • **Fields in INGR0_IP1_PROT_MATCH_2_LOWER**

Field Name	Bit	Access	Description	Default
INGR0_IP1_PROT_MATCH_2_LOWER	31:0	R/W	64-bit match register for advancing to the next protocol, lower portion	0x00000000

4.10.7.6 ETHERNET_COMPARATOR:INGR0_IP1_NXT_PROTOCOL:INGR0_IP1_PROT_MASK_2_UPPER

Parent: ETHERNET_COMPARATOR:INGR0_IP1_NXT_PROTOCOL

Instances: 1

Table 349 • **Fields in INGR0_IP1_PROT_MASK_2_UPPER**

Field Name	Bit	Access	Description	Default
INGR0_IP1_PROT_MASK_2_UPPER	31:0	R/W		0x00000000

4.10.7.7 ETHERNET_COMPARATOR:INGR0_IP1_NXT_PROTOCOL:INGR0_IP1_PROT_MASK_2_LOWER

Parent: ETHERNET_COMPARATOR:INGR0_IP1_NXT_PROTOCOL

Instances: 1

Table 350 • **Fields in INGR0_IP1_PROT_MASK_2_LOWER**

Field Name	Bit	Access	Description	Default
INGR0_IP1_PROT_MASK_2_LOWER	31:0	R/W		0x00000000

4.10.7.8 ETHERNET_COMPARATOR:INGR0_IP1_NXT_PROTOCOL:INGR0_IP1_PROT_OFFSET_2

Parent: ETHERNET_COMPARATOR:INGR0_IP1_NXT_PROTOCOL

Instances: 1

Table 351 • **Fields in INGR0_IP1_PROT_OFFSET_2**

Field Name	Bit	Access	Description	Default
INGR0_IP1_PROT_OFFSET_2	6:0	R/W	Points to the start of match field 2 relative to the first byte of this protocol	0x00

4.10.7.9 ETHERNET_COMPARATOR:INGR0_IP1_NXT_PROTOCOL:INGR0_IP1_UDP_CHKSUM_CFG

Parent: ETHERNET_COMPARATOR:INGR0_IP1_NXT_PROTOCOL

Instances: 1

Table 352 • **Fields in INGR0_IP1_UDP_CHKSUM_CFG**

Field Name	Bit	Access	Description	Default
INGR0_IP1_UDP_CHKSUM_OFFSET	15:8	R/W	Pointer to the IP/UDP checksum field FOR IPv4 frames or to the pad bytes of a IPv6/UDP frame. For IPv4, it points to the bytes that will be cleared. For IPv6, it points to the bytes that will be updated to fix the CRC.	0x00
INGR0_IP1_UDP_CHKSUM_WIDTH	5:4	R/W	Specifies the length of the checksum field in bytes	0x2
INGR0_IP1_UDP_CHKSUM_UPDATE_ENA	1	R/W	This bit and IP_UDP_CHKSUM_CLEAR_ENA CANNOT be set together 0: No pad byte field update 1: Update the pad bytes at the end of the frame	0x0
INGR0_IP1_UDP_CHKSUM_CLEAR_ENA	0	R/W	This bit and IP_UDP_CHKSUM_UPDATE_ENA CANNOT be set together 0: Do not clear the checksum 1: Clear the UDP checksum field in an IPv4 frame	0x0

4.10.8 ETHERNET_COMPARATOR:INGR0_IP1_FLOW_CFG

Parent: Egress0 Ethernet Comparator

Instances: 8

Table 353 • **Registers in INGR0_IP1_FLOW_CFG**

Register Name	Offset within Register Group	Instances and Address Spacing	Description	Details
INGR0_IP1_FLOW_ENA	0x00000000	1	IP flow enable register	Page 231
INGR0_IP1_FLOW_MATCH_UPPER	0x00000004	1	Upper portion of the IP flow match register	Page 231
INGR0_IP1_FLOW_MATCH_UPPER_MID	0x00000008	1	Upper mid portion of the IP flow match register	Page 231
INGR0_IP1_FLOW_MATCH_LOWER_MID	0x0000000C	1	Lower mid portion of the IP flow match register	Page 232
INGR0_IP1_FLOW_MATCH_LOWER	0x00000010	1	Lower portion of the IP flow match register	Page 232
INGR0_IP1_FLOW_MASK_UPPER	0x00000014	1	Upper portion of the IP flow match mask register	Page 232
INGR0_IP1_FLOW_MASK_UPPER_MID	0x00000018	1	Upper mid portion of the IP flow match mask register	Page 232
INGR0_IP1_FLOW_MASK_LOWER_MID	0x0000001C	1	Lower mid portion of the IP flow match mask register	Page 233

Table 353 • **Registers in INGR0_IP1_FLOW_CFG *(continued)***

Register Name	Offset within Register Group	Instances and Address Spacing	Description	Details
INGR0_IP1_FLOW_MASK_LOWER	0x00000020	1	Lower portion of the IP flow match mask register	Page 233

4.10.8.1 ETHERNET_COMPARATOR:INGR0_IP1_FLOW_CFG:INGR0_IP1_FLOW_ENA

Parent: ETHERNET_COMPARATOR:INGR0_IP1_FLOW_CFG

Instances: 1

Table 354 • **Fields in INGR0_IP1_FLOW_ENA**

Field Name	Bit	Access	Description	Default
INGR0_IP1_FLOW_MATCH_MODE	9:8	R/W	Match mode 0: Match on source address 1: Match on destination address 2: Match on either source or destination address 3: Reserved	0x0
INGR0_IP1_CHANNEL_MASK	5:4	R/W	Channel mask 0x0: Flow invalid 0x1: Flow valid for channel 0 0x2: Flow valid for channel 1 0x3: Flow valid for both channels	0x3
INGR0_IP1_FLOW_ENA	0	R/W	Flow enable. If this comparator block is not used, all flow enable bits must be set to 0. 0: Flow disabled 1: Flow enabled	0x0

4.10.8.2 ETHERNET_COMPARATOR:INGR0_IP1_FLOW_CFG:INGR0_IP1_FLOW_MATCH_UPPER

Parent: ETHERNET_COMPARATOR:INGR0_IP1_FLOW_CFG

Instances: 1

Table 355 • **Fields in INGR0_IP1_FLOW_MATCH_UPPER**

Field Name	Bit	Access	Description	Default
INGR0_IP1_FLOW_MATCH_UPPER	31:0	R/W	Match field for either the entire 32-bit selected address for IPv4 or the upper 32 bits of the selected address for IPv6	0x00000000

4.10.8.3 ETHERNET_COMPARATOR:INGR0_IP1_FLOW_CFG:INGR0_IP1_FLOW_MATCH_UPPER_MID

Parent: ETHERNET_COMPARATOR:INGR0_IP1_FLOW_CFG

Instances: 1

Table 356 • **Fields in INGR0_IP1_FLOW_MATCH_UPPER_MID**

Field Name	Bit	Access	Description	Default
INGR0_IP1_FLOW_MATCH_UPPER_MID	31:0	R/W	Match bits for the upper middle 32 bits of the IPv6 address	0x00000000

4.10.8.4 ETHERNET_COMPARATOR:INGR0_IP1_FLOW_CFG:INGR0_IP1_FLOW_MATCH_LOWER_MID

Parent: ETHERNET_COMPARATOR:INGR0_IP1_FLOW_CFG

Instances: 1

Table 357 • **Fields in INGR0_IP1_FLOW_MATCH_LOWER_MID**

Field Name	Bit	Access	Description	Default
INGR0_IP1_FLOW_MATCH_LOWER_MID	31:0	R/W	Match bits for the lower middle 32 bits of the IPv6 address	0x00000000

4.10.8.5 ETHERNET_COMPARATOR:INGR0_IP1_FLOW_CFG:INGR0_IP1_FLOW_MATCH_LOWER

Parent: ETHERNET_COMPARATOR:INGR0_IP1_FLOW_CFG

Instances: 1

Table 358 • **Fields in INGR0_IP1_FLOW_MATCH_LOWER**

Field Name	Bit	Access	Description	Default
INGR0_IP1_FLOW_MATCH_LOWER	31:0	R/W	Match bits for the lower 32 bits of the IPv6 address	0x00000000

4.10.8.6 ETHERNET_COMPARATOR:INGR0_IP1_FLOW_CFG:INGR0_IP1_FLOW_MASK_UPPER

Parent: ETHERNET_COMPARATOR:INGR0_IP1_FLOW_CFG

Instances: 1

Table 359 • **Fields in INGR0_IP1_FLOW_MASK_UPPER**

Field Name	Bit	Access	Description	Default
INGR0_IP1_FLOW_MASK_UPPER	31:0	R/W	Address mask for the IP address	0x00000000

4.10.8.7 ETHERNET_COMPARATOR:INGR0_IP1_FLOW_CFG:INGR0_IP1_FLOW_MASK_UPPER_MID

Parent: ETHERNET_COMPARATOR:INGR0_IP1_FLOW_CFG

Instances: 1

Table 360 • **Fields in INGR0_IP1_FLOW_MASK_UPPER_MID**

Field Name	Bit	Access	Description	Default
INGR0_IP1_FLOW_MASK_UPPER_MID	31:0	R/W	These bits must be all 0 for IPv4 and any 32-bit address match mode	0x00000000

4.10.8.8 ETHERNET_COMPARATOR:INGR0_IP1_FLOW_CFG:INGR0_IP1_FLOW_MASK_LOWER_MID

Parent: ETHERNET_COMPARATOR:INGR0_IP1_FLOW_CFG

Instances: 1

Table 361 • **Fields in INGR0_IP1_FLOW_MASK_LOWER_MID**

Field Name	Bit	Access	Description	Default
INGR0_IP1_FLOW_MASK_LOWER_MID	31:0	R/W	These bits must be all 0 for IPv4 and any 32-bit address match mode	0x00000000

4.10.8.9 ETHERNET_COMPARATOR:INGR0_IP1_FLOW_CFG:INGR0_IP1_FLOW_MASK_LOWER

Parent: ETHERNET_COMPARATOR:INGR0_IP1_FLOW_CFG

Instances: 1

Table 362 • **Fields in INGR0_IP1_FLOW_MASK_LOWER**

Field Name	Bit	Access	Description	Default
INGR0_IP1_FLOW_MASK_LOWER	31:0	R/W	These bits must be all 0 for IPv4 and any 32-bit address match mode	0x00000000

4.10.9 ETHERNET_COMPARATOR:INGR0_IP2_NXT_PROTOCOL

Parent: Egress0 Ethernet Comparator

Instances: 1

Table 363 • **Registers in INGR0_IP2_NXT_PROTOCOL**

Register Name	Offset within Register Group	Instances and Address Spacing	Description	Details
INGR0_IP2_NXT_COMPARATOR	0x00000000	1	IP next comparator control register	Page 234
INGR0_IP2_MODE	0x00000004	1	IP comparator mode	Page 234
INGR0_IP2_PROT_MATCH_1	0x00000008	1	IP match register set 1	Page 235
INGR0_IP2_PROT_MATCH_2_UPPER	0x0000000C	1	Upper portion of match register 2	Page 235

Table 363 • **Registers in INGR0_IP2_NXT_PROTOCOL *(continued)***

Register Name	Offset within Register Group	Instances and Address Spacing	Description	Details
INGR0_IP2_PROT_MATCH_2_LOWER	0x00000010	1	Lower portion of match register 2	Page 235
INGR0_IP2_PROT_MASK_2_UPPER	0x00000014	1	Upper portion of match mask register 2	Page 236
INGR0_IP2_PROT_MASK_2_LOWER	0x00000018	1	Lower portion of match mask register 2	Page 236
INGR0_IP2_PROT_OFFSET_2	0x0000001C	1	IP match offset register set 2	Page 236
INGR0_IP2_UDP_CHKSUM_CFG	0x00000020	1	IP/UDP checksum control register	Page 236

4.10.9.1 ETHERNET_COMPARATOR:INGR0_IP2_NXT_PROTOCOL:INGR0_IP2_NXT_COMPARATOR

Parent: ETHERNET_COMPARATOR:INGR0_IP2_NXT_PROTOCOL

Instances: 1

Table 364 • **Fields in INGR0_IP2_NXT_COMPARATOR**

Field Name	Bit	Access	Description	Default
INGR0_IP2_NXT_PROTOCOL	15:8	R/W	Number of bytes in this header, points to the beginning of the next protocol.	0x00
INGR0_IP2_NXT_COMPARATOR	2:0	R/W	Points to the next comparator stage. If this comparator block is not used, this field must be set to 0. 0: Comparator block not used 1: Reserved 2: Reserved 3: Reserved 4: Reserved 5: PTP/OAM comparator 6,7: Reserved	0x0

4.10.9.2 ETHERNET_COMPARATOR:INGR0_IP2_NXT_PROTOCOL:INGR0_IP2_MODE

Parent: ETHERNET_COMPARATOR:INGR0_IP2_NXT_PROTOCOL

Instances: 1

Table 365 • **Fields in INGR0_IP2_MODE**

Field Name	Bit	Access	Description	Default
INGR0_IP2_FLOW_OFFSET	12:8	R/W	Points to the source address field in the IP frame. Use 12 for IPv4 and 8 for IPv6.	0x0C

Table 365 • **Fields in INGR0_IP2_MODE *(continued)***

Field Name	Bit	Access	Description	Default
INGR0_IP2_MODE	1:0	R/W	IP mode 0: IPv4 1: IPv6 2: Other protocol, 32-bit address match 3: Other protocol, 128-bit address match	0x0

4.10.9.3 ETHERNET_COMPARATOR:INGR0_IP2_NXT_PROTOCOL:INGR0_IP2_PROT_MATCH_1

Parent: ETHERNET_COMPARATOR:INGR0_IP2_NXT_PROTOCOL

Instances: 1

Table 366 • **Fields in INGR0_IP2_PROT_MATCH_1**

Field Name	Bit	Access	Description	Default
INGR0_IP2_PROT_OFFSET_1	20:16	R/W	Points to the start of this match field relative to the first byte of this protocol	0x00
INGR0_IP2_PROT_MASK_1	15:8	R/W	Mask field for IP_PROT_MATCH_1	0x00
INGR0_IP2_PROT_MATCH_1	7:0	R/W	8-bit match field	0x00

4.10.9.4 ETHERNET_COMPARATOR:INGR0_IP2_NXT_PROTOCOL:INGR0_IP2_PROT_MATCH_2_UPPER

Parent: ETHERNET_COMPARATOR:INGR0_IP2_NXT_PROTOCOL

Instances: 1

Table 367 • **Fields in INGR0_IP2_PROT_MATCH_2_UPPER**

Field Name	Bit	Access	Description	Default
INGR0_IP2_PROT_MATCH_2_UPPER	31:0	R/W	64-bit match register for advancing to the next protocol, upper portion	0x00000000

4.10.9.5 ETHERNET_COMPARATOR:INGR0_IP2_NXT_PROTOCOL:INGR0_IP2_PROT_MATCH_2_LOWER

Parent: ETHERNET_COMPARATOR:INGR0_IP2_NXT_PROTOCOL

Instances: 1

Table 368 • **Fields in INGR0_IP2_PROT_MATCH_2_LOWER**

Field Name	Bit	Access	Description	Default
INGR0_IP2_PROT_MATCH_2_LOWER	31:0	R/W	64-bit match register for advancing to the next protocol, lower portion	0x00000000

4.10.9.6 ETHERNET_COMPARATOR:INGR0_IP2_NXT_PROTOCOL:INGR0_IP2_PROT_MASK_2_UPPER

Parent: ETHERNET_COMPARATOR:INGR0_IP2_NXT_PROTOCOL

Instances: 1

Table 369 • **Fields in INGR0_IP2_PROT_MASK_2_UPPER**

Field Name	Bit	Access	Description	Default
INGR0_IP2_PROT_MASK_2_UPPER	31:0	R/W		0x00000000

4.10.9.7 ETHERNET_COMPARATOR:INGR0_IP2_NXT_PROTOCOL:INGR0_IP2_PROT_MASK_2_LOWER

Parent: ETHERNET_COMPARATOR:INGR0_IP2_NXT_PROTOCOL

Instances: 1

Table 370 • **Fields in INGR0_IP2_PROT_MASK_2_LOWER**

Field Name	Bit	Access	Description	Default
INGR0_IP2_PROT_MASK_2_LOWER	31:0	R/W		0x00000000

4.10.9.8 ETHERNET_COMPARATOR:INGR0_IP2_NXT_PROTOCOL:INGR0_IP2_PROT_OFFSET_2

Parent: ETHERNET_COMPARATOR:INGR0_IP2_NXT_PROTOCOL

Instances: 1

Table 371 • **Fields in INGR0_IP2_PROT_OFFSET_2**

Field Name	Bit	Access	Description	Default
INGR0_IP2_PROT_OFFSET_2	6:0	R/W	Points to the start of match field 2 relative to the first byte of this protocol	0x00

4.10.9.9 ETHERNET_COMPARATOR:INGR0_IP2_NXT_PROTOCOL:INGR0_IP2_UDP_CHKSUM_CFG

Parent: ETHERNET_COMPARATOR:INGR0_IP2_NXT_PROTOCOL

Instances: 1

Table 372 • **Fields in INGR0_IP2_UDP_CHKSUM_CFG**

Field Name	Bit	Access	Description	Default
INGR0_IP2_UDP_CHKSUM_OFFSET	15:8	R/W	Pointer to the IP/UDP checksum field FOR IPv4 frames or to the pad bytes of a IPv6/UDP frame. For IPv4, it points to the bytes that will be cleared. For IPv6, it points to the bytes that will be updated to fix the CRC.	0x00
INGR0_IP2_UDP_CHKSUM_WIDTH	5:4	R/W	Specifies the length of the checksum field in bytes	0x2
INGR0_IP2_UDP_CHKSUM_UPDATE_ENA	1	R/W	This bit and IP_UDP_CHKSUM_CLEAR_ENA CANNOT be set together 1: Update the pad bytes at the end of the frame 0: No pad byte field update	0x0
INGR0_IP2_UDP_CHKSUM_CLEAR_ENA	0	R/W	This bit and IP_UDP_CHKSUM_UPDATE_ENA CANNOT be set together 1: Clear the UDP checksum field in an IPv4 frame 0: Do not clear the checksum	0x0

4.10.10 ETHERNET_COMPARATOR:INGR0_IP2_FLOW_CFG

Parent: Egress0 Ethernet Comparator

Instances: 8

Table 373 • **Registers in INGR0_IP2_FLOW_CFG**

Register Name	Offset within Register Group	Instances and Address Spacing	Description	Details
INGR0_IP2_FLOW_ENA	0x00000000	1	IP flow enable register	Page 238
INGR0_IP2_FLOW_MATCH_UPPER	0x00000004	1	Upper portion of the IP flow match register	Page 238
INGR0_IP2_FLOW_MATCH_UPPER_MID	0x00000008	1	Upper mid portion of the IP flow match register	Page 238
INGR0_IP2_FLOW_MATCH_LOWER_MID	0x0000000C	1	Lower mid portion of the IP flow match register	Page 239
INGR0_IP2_FLOW_MATCH_LOWER	0x00000010	1	Lower portion of the IP flow match register	Page 239
INGR0_IP2_FLOW_MASK_UPPER	0x00000014	1	Upper portion of the IP flow match mask register	Page 239
INGR0_IP2_FLOW_MASK_UPPER_MID	0x00000018	1	Upper mid portion of the IP flow match mask register	Page 240
INGR0_IP2_FLOW_MASK_LOWER_MID	0x0000001C	1	Lower mid portion of the IP flow match mask register	Page 240

Table 373 • **Registers in INGR0_IP2_FLOW_CFG *(continued)***

Register Name	Offset within Register Group	Instances and Address Spacing	Description	Details
INGR0_IP2_FLOW_MASK_LOWER	0x00000020	1	Lower portion of the IP flow match mask register	Page 240

4.10.10.1 ETHERNET_COMPARATOR:INGR0_IP2_FLOW_CFG:INGR0_IP2_FLOW_ENA

Parent: ETHERNET_COMPARATOR:INGR0_IP2_FLOW_CFG

Instances: 1

Table 374 • **Fields in INGR0_IP2_FLOW_ENA**

Field Name	Bit	Access	Description	Default
INGR0_IP2_FLOW_MATCH_MODE	9:8	R/W	Match mode 0: Match on source address 1: Match on destination address 2: Match on either source or destination address 3: Reserved	0x0
INGR0_IP2_CHANNEL_MASK	5:4	R/W	Channel mask 0x0: Flow invalid 0x1: Flow valid for channel 0 0x2: Flow valid for channel 1 0x3: Flow valid for both channels	0x3
INGR0_IP2_FLOW_ENA	0	R/W	Flow enable. If this comparator block is not used, all flow enable bits must be set to 0. 0: Flow disabled 1: Flow enabled	0x0

4.10.10.2 ETHERNET_COMPARATOR:INGR0_IP2_FLOW_CFG:INGR0_IP2_FLOW_MATCH_UPPER

Parent: ETHERNET_COMPARATOR:INGR0_IP2_FLOW_CFG

Instances: 1

Table 375 • **Fields in INGR0_IP2_FLOW_MATCH_UPPER**

Field Name	Bit	Access	Description	Default
INGR0_IP2_FLOW_MATCH_UPPER	31:0	R/W	Match field for either the entire 32-bit selected address for IPv4 or the upper 32 bits of the selected address for IPv6	0x00000000

4.10.10.3 ETHERNET_COMPARATOR:INGR0_IP2_FLOW_CFG:INGR0_IP2_FLOW_MATCH_UPPER_MID

Parent: ETHERNET_COMPARATOR:INGR0_IP2_FLOW_CFG

Instances: 1

Table 376 • **Fields in INGR0_IP2_FLOW_MATCH_UPPER_MID**

Field Name	Bit	Access	Description	Default
INGR0_IP2_FLOW_MATCH_UPPER_MID	31:0	R/W	Match bits for the upper middle 32 bits of the IPv6 address	0x00000000

4.10.10.4 ETHERNET_COMPARATOR:INGR0_IP2_FLOW_CFG:INGR0_IP2_FLOW_MATCH_LOWER_MID

Parent: ETHERNET_COMPARATOR:INGR0_IP2_FLOW_CFG

Instances: 1

Table 377 • **Fields in INGR0_IP2_FLOW_MATCH_LOWER_MID**

Field Name	Bit	Access	Description	Default
INGR0_IP2_FLOW_MATCH_LOWER_MID	31:0	R/W	Match bits for the lower middle 32 bits of the IPv6 address	0x00000000

4.10.10.5 ETHERNET_COMPARATOR:INGR0_IP2_FLOW_CFG:INGR0_IP2_FLOW_MATCH_LOWER

Parent: ETHERNET_COMPARATOR:INGR0_IP2_FLOW_CFG

Instances: 1

Table 378 • **Fields in INGR0_IP2_FLOW_MATCH_LOWER**

Field Name	Bit	Access	Description	Default
INGR0_IP2_FLOW_MATCH_LOWER	31:0	R/W	Match bits for the lower 32 bits of the IPv6 address	0x00000000

4.10.10.6 ETHERNET_COMPARATOR:INGR0_IP2_FLOW_CFG:INGR0_IP2_FLOW_MASK_UPPER

Parent: ETHERNET_COMPARATOR:INGR0_IP2_FLOW_CFG

Instances: 1

Table 379 • **Fields in INGR0_IP2_FLOW_MASK_UPPER**

Field Name	Bit	Access	Description	Default
INGR0_IP2_FLOW_MASK_UPPER	31:0	R/W	Address mask for the IP address. It uses CIDR format and specifies a number of sequential bits to be used for matching, and a number of sequential bits that are not checked. IP addresses specified in CIDR format look like the following example: 192.0.0.5/24 In this example, the upper 24 bits are significant and the lower 8 bits are not checked. This can be swapped by setting the CIDR_DIRECTION register to 1 (normally it is 0) so that in the above example, the upper 8 bits would not be checked and the lower 24 bits would be checked. For IPv4 the allowable range is 1 - 32 For IPv6 the allowable range is 1 - 128 All other values are not defined	0x00000000

4.10.10.7 ETHERNET_COMPARATOR:INGR0_IP2_FLOW_CFG:INGR0_IP2_FLOW_MASK_UPPER_MID

Parent: ETHERNET_COMPARATOR:INGR0_IP2_FLOW_CFG

Instances: 1

Table 380 • **Fields in INGR0_IP2_FLOW_MASK_UPPER_MID**

Field Name	Bit	Access	Description	Default
INGR0_IP2_FLOW_MASK_UPPER_MID	31:0	R/W	These bits must be all 0 for IPv4 and any 32-bit address match mode	0x00000000

4.10.10.8 ETHERNET_COMPARATOR:INGR0_IP2_FLOW_CFG:INGR0_IP2_FLOW_MASK_LOWER_MID

Parent: ETHERNET_COMPARATOR:INGR0_IP2_FLOW_CFG

Instances: 1

Table 381 • **Fields in INGR0_IP2_FLOW_MASK_LOWER_MID**

Field Name	Bit	Access	Description	Default
INGR0_IP2_FLOW_MASK_LOWER_MID	31:0	R/W	These bits must be all 0 for IPv4 and any 32-bit address match mode	0x00000000

4.10.10.9 ETHERNET_COMPARATOR:INGR0_IP2_FLOW_CFG:INGR0_IP2_FLOW_MASK_LOWER

Parent: ETHERNET_COMPARATOR:INGR0_IP2_FLOW_CFG

Instances: 1

Table 382 • **Fields in INGR0_IP2_FLOW_MASK_LOWER**

Field Name	Bit	Access	Description	Default
INGR0_IP2_FLOW_MASK_LOWER	31:0	R/W	These bits must be all 0 for IPv4 and any 32-bit address match mode	0x00000000

4.10.11 ETHERNET_COMPARATOR:INGR0_PTP_FLOW

Parent: Egress0 Ethernet Comparator

Instances: 6

Table 383 • **Registers in INGR0_PTP_FLOW**

Register Name	Offset within Register Group	Instances and Address Spacing	Description	Details
INGR0_PTP_FLOW_ENA	0x00000000	1	PTP/OAM flow enable	Page 241
INGR0_PTP_FLOW_MATCH_UPPER	0x00000004	1	Upper half of PTP/OAM flow match field	Page 242
INGR0_PTP_FLOW_MATCH_LOWER	0x00000008	1	Lower half of PTP/OAM flow match field	Page 242
INGR0_PTP_FLOW_MASK_UPPER	0x0000000C	1	Upper half of PTP/OAM flow match mask	Page 242
INGR0_PTP_FLOW_MASK_LOWER	0x00000010	1	Lower half of PTP/OAM flow match mask	Page 242
INGR0_PTP_DOMAIN_RANGE	0x00000014	1	PTP/OAM range match register	Page 243
INGR0_PTP_ACTION	0x00000018	1	PTP action control register	Page 243
INGR0_PTP_ACTION_2	0x0000001C	1	PTP action control register 2	Page 244
INGR0_PTP_ZERO_FIELD_CTL	0x00000020	1	Zero field control register	Page 244

4.10.11.1 ETHERNET_COMPARATOR:INGR0_PTP_FLOW:INGR0_PTP_FLOW_ENA

Parent: ETHERNET_COMPARATOR:INGR0_PTP_FLOW

Instances: 1

Table 384 • **Fields in INGR0_PTP_FLOW_ENA**

Field Name	Bit	Access	Description	Default
INGR0_PTP_CHANNEL_MASK	5:4	R/W	Channel mask 0x0: Flow invalid 0x1: Flow valid for channel 0 0x2: Flow valid for channel 1 0x3: Flow valid for both channels	0x3
INGR0_PTP_FLOW_ENA	0	R/W	Flow enable	0x0

4.10.11.2 ETHERNET_COMPARATOR:INGR0_PTP_FLOW:INGR0_PTP_FLOW_MATCH_UPPER

Parent: ETHERNET_COMPARATOR:INGR0_PTP_FLOW

Instances: 1

Table 385 • **Fields in INGR0_PTP_FLOW_MATCH_UPPER**

Field Name	Bit	Access	Description	Default
INGR0_PTP_FLOW_MATCH_UPPER	31:0	R/W	PTP flow match, upper 32 bit	0x00000000

4.10.11.3 ETHERNET_COMPARATOR:INGR0_PTP_FLOW:INGR0_PTP_FLOW_MATCH_LOWER

Parent: ETHERNET_COMPARATOR:INGR0_PTP_FLOW

Instances: 1

Table 386 • **Fields in INGR0_PTP_FLOW_MATCH_LOWER**

Field Name	Bit	Access	Description	Default
INGR0_PTP_FLOW_MATCH_LOWER	31:0	R/W	PTP flow match, lower 32 bit	0x00000000

4.10.11.4 ETHERNET_COMPARATOR:INGR0_PTP_FLOW:INGR0_PTP_FLOW_MASK_UPPER

Parent: ETHERNET_COMPARATOR:INGR0_PTP_FLOW

Instances: 1

Table 387 • **Fields in INGR0_PTP_FLOW_MASK_UPPER**

Field Name	Bit	Access	Description	Default
INGR0_PTP_FLOW_MASK_UPPER	31:0	R/W	PTP flow mask, upper 32 bit	0x00000000

4.10.11.5 ETHERNET_COMPARATOR:INGR0_PTP_FLOW:INGR0_PTP_FLOW_MASK_LOWER

Parent: ETHERNET_COMPARATOR:INGR0_PTP_FLOW

Instances: 1

Table 388 • **Fields in INGR0_PTP_FLOW_MASK_LOWER**

Field Name	Bit	Access	Description	Default
INGR0_PTP_FLOW_MASK_LOWER	31:0	R/W	PTP flow mask, lower 32 bit	0x00000000

4.10.11.6 ETHERNET_COMPARATOR:INGR0_PTP_FLOW:INGR0_PTP_DOMAIN_RANGE

Parent: ETHERNET_COMPARATOR:INGR0_PTP_FLOW

Instances: 1

Table 389 • **Fields in INGR0_PTP_DOMAIN_RANGE**

Field Name	Bit	Access	Description	Default
INGR0_PTP_DOMAIN_RANGE_OFFSET	28:24	R/W	PTP domain range offset	0x00
INGR0_PTP_DOMAIN_RANGE_UPPER	23:16	R/W	Upper range of PTP domain field to match	0xFF
INGR0_PTP_DOMAIN_RANGE_LOWER	15:8	R/W	Lower range of PTP domain field to match	0x00
INGR0_PTP_DOMAIN_RANGE_ENA	0	R/W	Enable PTP domain range checking	0x0

4.10.11.7 ETHERNET_COMPARATOR:INGR0_PTP_FLOW:INGR0_PTP_ACTION

Parent: ETHERNET_COMPARATOR:INGR0_PTP_FLOW

Instances: 1

Table 390 • **Fields in INGR0_PTP_ACTION**

Field Name	Bit	Access	Description	Default
INGR0_PTP_MOD_FRAME_STAT_UPDATE	28	R/W	Modified frame status update 0: Do not signal the rewriter to update the value of the Modified Frame Status bit 1: Signal the rewriter to update the value of the Modified Frame Status bit	0x0
INGR0_PTP_MOD_FRAME_BYTE_OFFSET	26:24	R/W	Indicates the position relative to the start of the PTP frame in bytes where the Modified Frame Status bit resides	0x0
INGR0_PTP_SUB_DELAY_ASYM_ENA	21	R/W	Enable subtract delay asymmetry signal 0: Do not signal the timestamp block to subtract the asymmetry delay 1: Signal the timestamp block to subtract the asymmetry delay	0x0
INGR0_PTP_ADD_DELAY_ASYM_ENA	20	R/W	Enable add delay asymmetry signal 0: Do not signal the timestamp block to add the asymmetry delay 1: Signal the timestamp block to add the asymmetry delay	0x0
INGR0_PTP_TIME_STRG_FIELD_OFFSET	15:10	R/W	Time storage field offset The location in a PTP frame where a time value can be stored or read	0x00

Table 390 • **Fields in INGR0_PTP_ACTION *(continued)***

Field Name	Bit	Access	Description	Default
INGR0_PTP_CORR_FIELD_OFFSET	9:5	R/W	Points to the location of the correction field for updating the timestamp. Location is relative to the first byte of the PTP/OAM header. **Note:** If this flow is being used to match OAM frames, set this register to 4.	0x00
INGR0_PTP_SAVE_LOCAL_TIME	4	R/W	Enable saving time 0: Do not save the time to the timestamp FIFO 1: Save the local time to the timestamp FIFO	0x0
INGR0_PTP_COMMAND	3:0	R/W	PTP action command 0: NOP 1: SUB 2: SUB_P2P 3: ADD 4: SUB_ADD 5: WRITE_1588 6: WRITE_P2P (deprecated) 7: WRITE_NS 8: WRITE_NS_P2P	0x0

4.10.11.8 ETHERNET_COMPARATOR:INGR0_PTP_FLOW:INGR0_PTP_ACTION_2

Parent: ETHERNET_COMPARATOR:INGR0_PTP_FLOW

Instances: 1

Table 391 • **Fields in INGR0_PTP_ACTION_2**

Field Name	Bit	Access	Description	Default
INGR0_PTP_NEW_CF_LOC	23:16	R/W	Location of the new correction field relative to the PTP header start. Only even values are allowed.	0x00
INGR0_PTP_REWRITE_OFFSET	15:8	R/W	Points to where in the frame relative to the SFD that the timestamp should be updated	0x00
INGR0_PTP_REWRITE_BYTES	3:0	R/W	Number of bytes in the PTP or OAM frame that must be modified by the rewriter for the timestamp	0x0

4.10.11.9 ETHERNET_COMPARATOR:INGR0_PTP_FLOW:INGR0_PTP_ZERO_FIELD_CTL

Parent: ETHERNET_COMPARATOR:INGR0_PTP_FLOW

Instances: 1

Table 392 • **Fields in INGR0_PTP_ZERO_FIELD_CTL**

Field Name	Bit	Access	Description	Default
INGR0_PTP_ZERO_FIELD_OFFSET	13:8	R/W	Points to a location in the PTP/OAM frame relative to the start of the PTP header that will be zeroed if this function is enabled	0x00
INGR0_PTP_ZERO_FIELD_BYTE_CNT	3:0	R/W	The number of bytes to be zeroed. If this field is 0, then this function is not enabled.	0x0

4.10.12 ETHERNET_COMPARATOR:INGR0_PTP_IP_CHKSUM_CTL

Parent: Egress0 Ethernet Comparator

Instances: 1

Table 393 • **Registers in INGR0_PTP_IP_CHKSUM_CTL**

Register Name	Offset within Register Group	Instances and Address Spacing	Description	Details
INGR0_PTP_IP_CKSUM_SEL	0x00000000	1	IP checksum block select	Page 245

4.10.12.1 ETHERNET_COMPARATOR:INGR0_PTP_IP_CHKSUM_CTL:INGR0_PTP_IP_CKSUM_SEL

Parent: ETHERNET_COMPARATOR:INGR0_PTP_IP_CHKSUM_CTL

Instances: 1

Table 394 • **Fields in INGR0_PTP_IP_CKSUM_SEL**

Field Name	Bit	Access	Description	Default
INGR0_PTP_IP_CHKSUM_SEL	0	R/W	IP checksum controls selection 0: Use the IP checksum controls from IP comparator 1 1: Use the IP checksum controls from IP comparator 2	0x0

4.11 Egress1 Ethernet Comparator

Table 395 • **Register Groups in Egress1 Ethernet Comparator**

Register Group Name	Offset within Target	Instances and Address Spacing	Description	Details
EGR1_ETH1_NXT_PROTOCOL	0x00000000	1	Ethernet next protocol configuration	Page 246
EGR1_ETH1_FLOW_CFG	0x00000040	8 0x00000040	Ethernet flow configuration	Page 248

Table 395 • **Register Groups in Egress1 Ethernet Comparator *(continued)***

Register Group Name	Offset within Target	Instances and Address Spacing	Description	Details
EGR1_ETH2_NXT_PROTOCOL	0x00000240	1	Ethernet next protocol configuration	Page 251
EGR1_ETH2_FLOW_CFG	0x00000280	8 0x00000040	Ethernet flow configuration	Page 253
EGR1_MPLS_NXT_COMPARATOR	0x00000480	1	MPLS next protocol register	Page 256
EGR1_MPLS_FLOW_CFG	0x000004C0	8 0x00000040	MPLS flow configuration	Page 257
EGR1_IP1_NXT_PROTOCOL	0x000006C0	1	IP1 next protocol	Page 260
EGR1_IP1_FLOW_CFG	0x00000700	8 0x00000040	IP1 flow configuration	Page 264
EGR1_IP2_NXT_PROTOCOL	0x00000900	1	IP2 next protocol	Page 267
EGR1_IP2_FLOW_CFG	0x00000940	8 0x00000040	IP2 flow configuration	Page 271
EGR1_PTP_FLOW	0x00000B40	6 0x00000040	PTP flow configuration	Page 274
EGR1_PTP_IP_CHKSUM_CTL	0x00000CC0	1	IP checksum field control	Page 278
EGR1_FRAME_SIG_CFG	0x00000CC4	1	Frame signature builder configuration	Page 279

4.11.1 ETHERNET_COMPARATOR:EGR1_ETH1_NXT_PROTOCOL

Parent: Egress0 Ethernet Comparator

Instances: 1

Table 396 • **Registers in EGR1_ETH1_NXT_PROTOCOL**

Register Name	Offset within Register Group	Instances and Address Spacing	Description	Details
EGR1_ETH1_NXT_PROTOCOL	0x00000000	1	Ethernet next protocol register	Page 246
EGR1_ETH1_VLAN_TPID_CFG	0x00000004	1	VLAN TPID configuration	Page 247
EGR1_ETH1_TAG_MODE	0x00000008	1	Ethernet tag mode	Page 247
EGR1_ETH1_ETYPE_MATCH	0x0000000C	1	Ethertype match register	Page 247

4.11.1.1 ETHERNET_COMPARATOR:EGR1_ETH1_NXT_PROTOCOL:EGR1_ETH1_NXT_PROTOCOL

Parent: ETHERNET_COMPARATOR:EGR1_ETH1_NXT_PROTOCOL

Instances: 1

Table 397 • **Fields in EGR1_ETH1_NXT_PROTOCOL**

Field Name	Bit	Access	Description	Default
EGR1_ETH1_FRAME_SIG_OFFSET	20:16	R/W	Frame signature offset. Points to the start of the byte field in the Ethernet frame that will be used for the frame signature.	0x00
EGR1_ETH1_NXT_COMPARATOR	2:0	R/W	Points to the next comparator block after this Ethernet block 0: Reserved 1: Ethernet comparator 2 2: IP/UDP/ACH comparator 1 3: IP/UDP/ACH comparator 2 4: MPLS comparator 5: PTP/OAM comparator 6,7: Reserved	0x0

4.11.1.2 ETHERNET_COMPARATOR:EGR1_ETH1_NXT_PROTOCOL:EGR1_ETH1_VLAN_TPID_CFG

Parent: ETHERNET_COMPARATOR:EGR1_ETH1_NXT_PROTOCOL

Instances: 1

Table 398 • **Fields in EGR1_ETH1_VLAN_TPID_CFG**

Field Name	Bit	Access	Description	Default
EGR1_ETH1_VLAN_TPID_CFG	31:16	R/W	Configurable VLAN TPID (S or B-tag)	0x88A8

4.11.1.3 ETHERNET_COMPARATOR:EGR1_ETH1_NXT_PROTOCOL:EGR1_ETH1_TAG_MODE

Parent: ETHERNET_COMPARATOR:EGR1_ETH1_NXT_PROTOCOL

Instances: 1

Table 399 • **Fields in EGR1_ETH1_TAG_MODE**

Field Name	Bit	Access	Description	Default
EGR1_ETH1_PBB_ENA	0	R/W	This bit enables the presence of PBB. The I-tag match bits are programmed in the ETH1_VLAN_TAG_RANGE registers. The mask bits are programmed in the ETH1_VLAN_TAG2 registers. A B-tag if present is configured in the ETH1_VLAN_TAG1 registers. 0: PBB not enabled 1: Always expect PBB, last tag is always an I-tag	0x0

4.11.1.4 ETHERNET_COMPARATOR:EGR1_ETH1_NXT_PROTOCOL:EGR1_ETH1_ETYPE_MATCH

Parent: ETHERNET_COMPARATOR:EGR1_ETH1_NXT_PROTOCOL

Instances: 1

Table 400 • **Fields in EGR1_ETH1_ETYPE_MATCH**

Field Name	Bit	Access	Description	Default
EGR1_ETH1_ETYPE_MATCH	15:0	R/W	If the Ethertype/length field is an Ethertype, then this register is compared against the value. If the field is a length, the length value is not checked.	0x0000

4.11.2 ETHERNET_COMPARATOR:EGR1_ETH1_FLOW_CFG

Parent: Egress0 Ethernet Comparator

Instances: 8

Table 401 • **Registers in EGR1_ETH1_FLOW_CFG**

Register Name	Offset within Register Group	Instances and Address Spacing	Description	Details
EGR1_ETH1_FLOW_ENABLE	0x00000000	1	Ethernet flow enable	Page 248
EGR1_ETH1_MATCH_MODE	0x00000004	1	Ethernet protocol match mode	Page 249
EGR1_ETH1_ADDR_MATCH_1	0x00000008	1	Ethernet address match part 1	Page 250
EGR1_ETH1_ADDR_MATCH_2	0x0000000C	1	Ethernet address match part 2	Page 250
EGR1_ETH1_VLAN_TAG_RANGE_I_TAG	0x00000010	1	Ethernet VLAN tag range match register	Page 250
EGR1_ETH1_VLAN_TAG1	0x00000014	1	VLAN tag 1 match/mask	Page 251
EGR1_ETH1_VLAN_TAG2_I_TAG	0x00000018	1	Match/mask for VLAN tag 2 or I-tag match	Page 251

4.11.2.1 ETHERNET_COMPARATOR:EGR1_ETH1_FLOW_CFG:EGR1_ETH1_FLOW_ENABLE

Parent: ETHERNET_COMPARATOR:EGR1_ETH1_FLOW_CFG

Instances: 1

Table 402 • **Fields in EGR1_ETH1_FLOW_ENABLE**

Field Name	Bit	Access	Description	Default
EGR1_ETH1_CHANNEL_MASK	9:8	R/W	Channel mask 0x0: Flow invalid 0x1: Flow valid for channel 0 0x2: Flow valid for channel 1 0x3: Flow valid for both channels	0x3
EGR1_ETH1_FLOW_ENABLE	0	R/W	Flow enable 0: Flow disabled 1: Flow enabled	0x0

4.11.2.2 ETHERNET_COMPARATOR:EGR1_ETH1_FLOW_CFG:EGR1_ETH1_MATCH_MODE

Parent: ETHERNET_COMPARATOR:EGR1_ETH1_FLOW_CFG

Instances: 1

Table 403 • **Fields in EGR1_ETH1_MATCH_MODE**

Field Name	Bit	Access	Description	Default
EGR1_ETH1_VLAN_TAG_MODE	13:12	R/W	VLAN tag mode configuration 0: VLAN range checking disabled 1: VLAN range checking on tag 1 2: VLAN range checking on tag 2 (not supported with PBB) 3: Reserved	0x0
EGR1_ETH1_VLAN_TAG2_TYPE	9	R/W	VLAN tag2 type This register is only used if ETH1_VLAN_VERIFY_ENA = 1 If PBB not enabled: 0: C tag (TPID of 0x8100) 1: S tag (match to CONF_VLAN_TPID) If PBB enabled: 0,1: I tag (use range registers)	0x1
EGR1_ETH1_VLAN_TAG1_TYPE	8	R/W	VLAN tag1 type This register is only used if ETH1_VLAN_VERIFY_ENA = 1 0: C tag (TPID of 0x8100) 1: S or B tag (match to CONF_VLAN_TPID)	0x0
EGR1_ETH1_VLAN_TAGS	7:6	R/W	VLAN tags This register is only used if ETH1_VLAN_VERIFY_ENA = 1 0: No VLAN tags (not valid for PBB) 1: 1 VLAN tag (for PBB this would be the I-tag) 2: 2 VLAN tags (for PBB expect a B-tag and an I-tag) 3: Reserved	0x0
EGR1_ETH1_VLAN_VERIFY_ENA	4	R/W	Verify VLAN tags 0: Parse for VLAN tags, do not check values. For PBB the I-tag is always checked. 1: Verify configured VLAN tag configuration.	0x0
EGR1_ETH1_ETHERTYPE_MODE	0	R/W	VLAN tag verification configuration When checking for presence of SNAP/LLC based upon ETH1_MATCH_MODE, this field indicates if SNAP and 3-byte LLC is expected to be present. 0: Only Ethernet type II supported, no SNAP/LLC 1: Ethernet type II and Ethernet type I with SNAP/LLC, determine if SNAP/LLC is present or not. Type I always assumes that SNAP/LLC is present.	0x0

4.11.2.3 ETHERNET_COMPARATOR:EGR1_ETH1_FLOW_CFG:EGR1_ETH1_ADDR_MATCH_1

Parent: ETHERNET_COMPARATOR:EGR1_ETH1_FLOW_CFG

Instances: 1

Table 404 • **Fields in EGR1_ETH1_ADDR_MATCH_1**

Field Name	Bit	Access	Description	Default
EGR1_ETH1_ADDR_MATCH_1	31:0	R/W	First 32 bits of the address match value	0x00000000

4.11.2.4 ETHERNET_COMPARATOR:EGR1_ETH1_FLOW_CFG:EGR1_ETH1_ADDR_MATCH_2

Parent: ETHERNET_COMPARATOR:EGR1_ETH1_FLOW_CFG

Instances: 1

Table 405 • **Fields in EGR1_ETH1_ADDR_MATCH_2**

Field Name	Bit	Access	Description	Default
EGR1_ETH1_ADDR_MATCH_MODE	22:20	R/W	Selects how the addresses are matched. One-hot encoded. Multiple bits can be set at once 0: Full 48-bit address match 1: Match any unicast address 2: Match any muliticast address	0x1
EGR1_ETH1_ADDR_MATCH_SELECT	17:16	R/W	Selects which address to match 0: Match the destination address 1: Match the source address 2: Match either the source of destination address 3: Reserved	0x0
EGR1_ETH1_ADDR_MATCH_2	15:0	R/W	Last 16 bits of the Ethernet address match field	0x0000

4.11.2.5 ETHERNET_COMPARATOR:EGR1_ETH1_FLOW_CFG:EGR1_ETH1_VLAN_TAG_RANGE_I_TAG

Parent: ETHERNET_COMPARATOR:EGR1_ETH1_FLOW_CFG

Instances: 1

Table 406 • **Fields in EGR1_ETH1_VLAN_TAG_RANGE_I_TAG**

Field Name	Bit	Access	Description	Default
EGR1_ETH1_VLAN_TAG_RANGE_UPPER	27:16	R/W	If PBB mode is not enabled, then this register contains the upper range of the VLAN tag range match. If PBB mode is enabled, then this register contains the upper 12 bits of the I-tag.	0xFFF

Table 406 • **Fields in EGR1_ETH1_VLAN_TAG_RANGE_I_TAG *(continued)***

Field Name	Bit	Access	Description	Default
EGR1_ETH1_VLAN_TAG_RANGE_LOWER	11:0	R/W	If PBB mode is not enabled, then this register contains the lower range of the VLAN tag range match. If PBB mode is enabled, then this register contains the lower 12 bits of the I-tag.	0x000

4.11.2.6 ETHERNET_COMPARATOR:EGR1_ETH1_FLOW_CFG:EGR1_ETH1_VLAN_TAG1

Parent: ETHERNET_COMPARATOR:EGR1_ETH1_FLOW_CFG

Instances: 1

Table 407 • **Fields in EGR1_ETH1_VLAN_TAG1**

Field Name	Bit	Access	Description	Default
EGR1_ETH1_VLAN_TAG1_MASK	27:16	R/W	Mask value for VLAN tag 1	0xFFF
EGR1_ETH1_VLAN_TAG1_MATCH	11:0	R/W	Match value for the first VLAN tag	0x000

4.11.2.7 ETHERNET_COMPARATOR:EGR1_ETH1_FLOW_CFG:EGR1_ETH1_VLAN_TAG2_I_TAG

Parent: ETHERNET_COMPARATOR:EGR1_ETH1_FLOW_CFG

Instances: 1

Table 408 • **Fields in EGR1_ETH1_VLAN_TAG2_I_TAG**

Field Name	Bit	Access	Description	Default
EGR1_ETH1_VLAN_TAG2_MASK	27:16	R/W	When PBB is not enabled, the mask field for VLAN tag 2. When PBB is enabled, the upper 12 bits of the I-tag mask.	0xFFF
EGR1_ETH1_VLAN_TAG2_MATCH	11:0	R/W	When PBB is not enabled, the match field for VLAN Tag 2. When PBB is enabled, the lower 12 bits of the I-tag mask field.	0x000

4.11.3 ETHERNET_COMPARATOR:EGR1_ETH2_NXT_PROTOCOL

Parent: Egress0 Ethernet Comparator

Instances: 1

Table 409 • **Registers in EGR1_ETH2_NXT_PROTOCOL**

Register Name	Offset within Register Group	Instances and Address Spacing	Description	Details
EGR1_ETH2_NXT_PROTOCOL	0x00000000	1	Ethernet next protocol register	Page 252
EGR1_ETH2_VLAN_TPID_CFG	0x00000004	1	VLAN TPID configuration	Page 252
EGR1_ETH2_ETYPE_MATCH	0x00000008	1	Ethertype match register	Page 252

4.11.3.1 ETHERNET_COMPARATOR:EGR1_ETH2_NXT_PROTOCOL:EGR1_ETH2_NXT_PROTOCOL

Parent: ETHERNET_COMPARATOR:EGR1_ETH2_NXT_PROTOCOL

Instances: 1

Table 410 • **Fields in EGR1_ETH2_NXT_PROTOCOL**

Field Name	Bit	Access	Description	Default
EGR1_ETH2_FRAME_SIG_OFFSET	20:16	R/W	Frame signature offset. Points to the start of the byte field in the Ethernet frame that will be used for the frame signature.	0x00
EGR1_ETH2_NXT_COMPARATOR	2:0	R/W	Points to the next comparator block after this Ethernet block. If this comparator block is not used, this field must be set to 0. 0: Comparator block not used 1: Ethernet comparator 2 2: IP/UDP/ACH comparator 1 3: IP/UDP/ACH comparator 2 4: MPLS comparator 5: PTP/OAM comparator 6,7: Reserved	0x0

4.11.3.2 ETHERNET_COMPARATOR:EGR1_ETH2_NXT_PROTOCOL:EGR1_ETH2_VLAN_TPID_CFG

Parent: ETHERNET_COMPARATOR:EGR1_ETH2_NXT_PROTOCOL

Instances: 1

Table 411 • **Fields in EGR1_ETH2_VLAN_TPID_CFG**

Field Name	Bit	Access	Description	Default
EGR1_ETH2_VLAN_TPID_CFG	31:16	R/W	Configurable S-tag TPID	0x88A8

4.11.3.3 ETHERNET_COMPARATOR:EGR1_ETH2_NXT_PROTOCOL:EGR1_ETH2_ETYPE_MATCH

Parent: ETHERNET_COMPARATOR:EGR1_ETH2_NXT_PROTOCOL

Instances: 1

Table 412 • **Fields in EGR1_ETH2_ETYPE_MATCH**

Field Name	Bit	Access	Description	Default
EGR1_ETH2_ETYPE_MATCH	15:0	R/W	If the Ethertype/length field is an Ethertype, then this register is compared against the value. If the field is a length, the length value is not checked.	0x0000

4.11.4 ETHERNET_COMPARATOR:EGR1_ETH2_FLOW_CFG

Parent: Egress0 Ethernet Comparator

Instances: 8

Table 413 • **Registers in EGR1_ETH2_FLOW_CFG**

Register Name	Offset within Register Group	Instances and Address Spacing	Description	Details
EGR1_ETH2_FLOW_ENABLE	0x00000000	1	Ethernet flow enable	Page 253
EGR1_ETH2_MATCH_MODE	0x00000004	1	Ethernet protocol match mode	Page 254
EGR1_ETH2_ADDR_MATCH_1	0x00000008	1	Ethernet address match part 1	Page 254
EGR1_ETH2_ADDR_MATCH_2	0x0000000C	1	Ethernet address match part 2	Page 255
EGR1_ETH2_VLAN_TAG_RANGE_I_TAG	0x00000010	1	Ethernet VLAN tag range match register	Page 255
EGR1_ETH2_VLAN_TAG1	0x00000014	1	VLAN tag 1 match/mask	Page 255
EGR1_ETH2_VLAN_TAG2_I_TAG	0x00000018	1	Match/mask for VLAN tag 2 or I-tag match	Page 256

4.11.4.1 ETHERNET_COMPARATOR:EGR1_ETH2_FLOW_CFG:EGR1_ETH2_FLOW_ENABLE

Parent: ETHERNET_COMPARATOR:EGR1_ETH2_FLOW_CFG

Instances: 1

Table 414 • **Fields in EGR1_ETH2_FLOW_ENABLE**

Field Name	Bit	Access	Description	Default
EGR1_ETH2_CHANNEL_MASK	9:8	R/W	Channel mask 0x0: Flow invalid 0x1: Flow valid for channel 0 0x2: Flow valid for channel 1 0x3: Flow valid for both channels	0x3
EGR1_ETH2_FLOW_ENABLE	0	R/W	Flow enable. If this comparator block is not used, all flow enable bits must be set to 0. 0: Flow disabled 1: Flow enabled	0x0

4.11.4.2 ETHERNET_COMPARATOR:EGR1_ETH2_FLOW_CFG:EGR1_ETH2_MATCH_MODE

Parent: ETHERNET_COMPARATOR:EGR1_ETH2_FLOW_CFG

Instances: 1

Table 415 • **Fields in EGR1_ETH2_MATCH_MODE**

Field Name	Bit	Access	Description	Default
EGR1_ETH2_VLAN_TAG_MODE	13:12	R/W	VLAN tag mode configuration 0: VLAN range checking disabled 1: VLAN range checking on tag 1 2: VLAN range checking on tag 2 (not supported with PBB) 3: Reserved	0x0
EGR1_ETH2_VLAN_TAG2_TYPE	9	R/W	VLAN tag2 type This register is only used if ETH1_VLAN_VERIFY_ENA = 1 0: C tag (TPID of 0x8100) 1: S tag (match to CONF_VLAN_TPID)	0x1
EGR1_ETH2_VLAN_TAG1_TYPE	8	R/W	VLAN tag1 type This register is only used if ETH1_VLAN_VERIFY_ENA = 1 0: C tag (TPID of 0x8100) 1: S or B tag (match to CONF_VLAN_TPID)	0x0
EGR1_ETH2_VLAN_TAGS	7:6	R/W	VLAN tags This register is only used if ETH2_VLAN_VERIFY_ENA = 1 0: No VLAN tags 1: 1 VLAN tag 2: 2 VLAN tags 3: Reserved	0x0
EGR1_ETH2_VLAN_VERIFY_ENA	4	R/W	Verify VLAN tags 0: Parse for VLAN tags, do not check values. 1: Verify configured VLAN tag configuration.	0x0
EGR1_ETH2_ETHERTYPE_MODE	0	R/W	VLAN tag verification configuration When checking for presence of SNAP/LLC based upon ETH1_MATCH_MODE, this field indicates if SNAP and 3-byte LLC is expected to be present. 0: Only Ethernet type II supported, no SNAP/LLC 1: Ethernet type II and Ethernet type I with SNAP/LLC, determine if SNAP/LLC is present or not. Type I always assumes that SNAP/LLC is present.	0x0

4.11.4.3 ETHERNET_COMPARATOR:EGR1_ETH2_FLOW_CFG:EGR1_ETH2_ADDR_MATCH_1

Parent: ETHERNET_COMPARATOR:EGR1_ETH2_FLOW_CFG

Instances: 1

Table 416 • **Fields in EGR1_ETH2_ADDR_MATCH_1**

Field Name	Bit	Access	Description	Default
EGR1_ETH2_ADDR_MATCH_1	31:0	R/W	First 32 bits of the address match value	0x00000000

4.11.4.4 ETHERNET_COMPARATOR:EGR1_ETH2_FLOW_CFG:EGR1_ETH2_ADDR_MATCH_2

Parent: ETHERNET_COMPARATOR:EGR1_ETH2_FLOW_CFG

Instances: 1

Table 417 • **Fields in EGR1_ETH2_ADDR_MATCH_2**

Field Name	Bit	Access	Description	Default
EGR1_ETH2_ADDR_MATCH_MODE	22:20	R/W	Selects how the addresses are matched. One-hot encoded. Multiple bits can be set at once. 0: Full 48-bit address match 1: Match any unicast address 2: Match any mulitcast address	0x1
EGR1_ETH2_ADDR_MATCH_SELECT	17:16	R/W	Selects which address to match 0: Match the destination address 1: Match the source address 2: Match either the source of destination address 3: Reserved	0x0
EGR1_ETH2_ADDR_MATCH_2	15:0	R/W	Last 16 bits of the Ethernet address match field	0x0000

4.11.4.5 ETHERNET_COMPARATOR:EGR1_ETH2_FLOW_CFG:EGR1_ETH2_VLAN_TAG_RANGE_I_TAG

Parent: ETHERNET_COMPARATOR:EGR1_ETH2_FLOW_CFG

Instances: 1

Table 418 • **Fields in EGR1_ETH2_VLAN_TAG_RANGE_I_TAG**

Field Name	Bit	Access	Description	Default
EGR1_ETH2_VLAN_TAG_RANGE_UPPER	27:16	R/W	Contains the upper range of the VLAN tag range match	0xFFF
EGR1_ETH2_VLAN_TAG_RANGE_LOWER	11:0	R/W	Contains the lower range of the VLAN tag range match	0x000

4.11.4.6 ETHERNET_COMPARATOR:EGR1_ETH2_FLOW_CFG:EGR1_ETH2_VLAN_TAG1

Parent: ETHERNET_COMPARATOR:EGR1_ETH2_FLOW_CFG

Instances: 1

Table 419 • **Fields in EGR1_ETH2_VLAN_TAG1**

Field Name	Bit	Access	Description	Default
EGR1_ETH2_VLAN_TAG1_MASK	27:16	R/W	Mask value for VLAN tag 1	0xFFF
EGR1_ETH2_VLAN_TAG1_MATCH	11:0	R/W	Match value for the first VLAN tag	0x000

4.11.4.7 ETHERNET_COMPARATOR:EGR1_ETH2_FLOW_CFG:EGR1_ETH2_VLAN_TAG2_I_TAG

Parent: ETHERNET_COMPARATOR:EGR1_ETH2_FLOW_CFG

Instances: 1

Table 420 • **Fields in EGR1_ETH2_VLAN_TAG2_I_TAG**

Field Name	Bit	Access	Description	Default
EGR1_ETH2_VLAN_TAG2_MASK	27:16	R/W	Mask field for VLAN tag 2	0xFFF
EGR1_ETH2_VLAN_TAG2_MATCH	11:0	R/W	Match field for VLAN Tag 2	0x000

4.11.5 ETHERNET_COMPARATOR:EGR1_MPLS_NXT_COMPARATOR

Parent: Egress0 Ethernet Comparator

Instances: 1

Table 421 • **Registers in EGR1_MPLS_NXT_COMPARATOR**

Register Name	Offset within Register Group	Instances and Address Spacing	Description	Details
EGR1_MPLS_NXT_COMPARATOR	0x00000000	1	MPLS next protocol comparator register	Page 256

4.11.5.1 ETHERNET_COMPARATOR:EGR1_MPLS_NXT_COMPARATOR:EGR1_MPLS_NXT_COMPARATOR

Parent: ETHERNET_COMPARATOR:EGR1_MPLS_NXT_COMPARATOR

Instances: 1

Table 422 • **Fields in EGR1_MPLS_NXT_COMPARATOR**

Field Name	Bit	Access	Description	Default
EGR1_MPLS_CTL_WORD	16	R/W	Indicates the presence of a control word after the last label. The first 4 bits of the control word are always 0. 0: No control word after the last label 1: Control word after the last label	0x0

Table 422 • **Fields in EGR1_MPLS_NXT_COMPARATOR *(continued)***

Field Name	Bit	Access	Description	Default
EGR1_MPLS_NXT_COMPARATOR	2:0	R/W	Points to the next comparator stage. If this comparator block is not used, this field must be set to 0. 0: Comparator block not used. 1: Ethernet comparator 2 2: IP/UDP/ACH comparator 1 3: IP/UDP/ACH comparator 2 4: Reserved 5: PTP/OAM comparator 6,7: Reserved	0x0

4.11.6 ETHERNET_COMPARATOR:EGR1_MPLS_FLOW_CFG

Parent: Egress0 Ethernet Comparator

Instances: 8

Table 423 • **Registers in EGR1_MPLS_FLOW_CFG**

Register Name	Offset within Register Group	Instances and Address Spacing	Description	Details
EGR1_MPLS_FLOW_CONTROL	0x00000000	1	MPLS flow control register	Page 257
EGR1_MPLS_LABEL_RANGE_LOWER_0	0x00000008	1	MPLS label 0 match range lower value	Page 258
EGR1_MPLS_LABEL_RANGE_UPPER_0	0x0000000C	1	MPLS label 0 match range upper value	Page 258
EGR1_MPLS_LABEL_RANGE_LOWER_1	0x00000010	1	MPLS label 1 match range lower value	Page 259
EGR1_MPLS_LABEL_RANGE_UPPER_1	0x00000014	1	MPLS label 1 match range upper value	Page 259
EGR1_MPLS_LABEL_RANGE_LOWER_2	0x00000018	1	MPLS label 2 match range lower value	Page 259
EGR1_MPLS_LABEL_RANGE_UPPER_2	0x0000001C	1	MPLS label 2 match range upper value	Page 259
EGR1_MPLS_LABEL_RANGE_LOWER_3	0x00000020	1	MPLS label 3 match range lower value	Page 260
EGR1_MPLS_LABEL_RANGE_UPPER_3	0x00000024	1	MPLS label 3 match range upper value	Page 260

4.11.6.1 ETHERNET_COMPARATOR:EGR1_MPLS_FLOW_CFG:EGR1_MPLS_FLOW_CONTROL

Parent: ETHERNET_COMPARATOR:EGR1_MPLS_FLOW_CFG

Instances: 1

Table 424 • **Fields in EGR1_MPLS_FLOW_CONTROL**

Field Name	Bit	Access	Description	Default
EGR1_MPLS_CHANNEL_MASK	25:24	R/W	MPLS channel mask selector 0x0: Flow invalid 0x1: Flow valid for channel 0 0x2: Flow valid for channel 1 0x3: Flow valid for both channels	0x3
EGR1_MPLS_STACK_DEPTH	19:16	R/W	Stack depth configuration Defines the allowable stack depths for searches. The direction that the stack is referenced is determined by the setting of MPLS_REF_PNT. For each bit set, the following table maps bits to stack depths: 0: Stack allowed to be 1 label deep 1: Stack allowed to be 2 labels deep 2: Stack allowed to be 3 labels deep 3: Stack allowed to be 4 labels deep	0x0
EGR1_MPLS_REF_PNT	4	R/W	Search direction for label matching 0: All searching is performed starting from the top of the stack 1: All searching is performed from the end of the stack	0x0
EGR1_MPLS_FLOW_ENA	0	R/W	Flow enable. If this comparator block is not used, all flow enable bits must be set to 0. 0: Flow is disabled 1: Flow is enabled	0x0

4.11.6.2 ETHERNET_COMPARATOR:EGR1_MPLS_FLOW_CFG:EGR1_MPLS_LABEL_RANGE_LOWER_0

Parent: ETHERNET_COMPARATOR:EGR1_MPLS_FLOW_CFG

Instances: 1

Table 425 • **Fields in EGR1_MPLS_LABEL_RANGE_LOWER_0**

Field Name	Bit	Access	Description	Default
EGR1_MPLS_LABEL_RANGE_LOWER_0	19:0	R/W	Lower value for label 0 match range	0x00000

4.11.6.3 ETHERNET_COMPARATOR:EGR1_MPLS_FLOW_CFG:EGR1_MPLS_LABEL_RANGE_UPPER_0

Parent: ETHERNET_COMPARATOR:EGR1_MPLS_FLOW_CFG

Instances: 1

Table 426 • **Fields in EGR1_MPLS_LABEL_RANGE_UPPER_0**

Field Name	Bit	Access	Description	Default
EGR1_MPLS_LABEL_RANGE_UPPER_0	19:0	R/W	Upper value for label 0 match range	0xFFFFF

4.11.6.4 ETHERNET_COMPARATOR:EGR1_MPLS_FLOW_CFG:EGR1_MPLS_LABEL_RANGE_LOWER_1

Parent: ETHERNET_COMPARATOR:EGR1_MPLS_FLOW_CFG

Instances: 1

Table 427 • **Fields in EGR1_MPLS_LABEL_RANGE_LOWER_1**

Field Name	Bit	Access	Description	Default
EGR1_MPLS_LABEL_RANGE_LOWER_1	19:0	R/W	Lower value for label 1 match range	0x00000

4.11.6.5 ETHERNET_COMPARATOR:EGR1_MPLS_FLOW_CFG:EGR1_MPLS_LABEL_RANGE_UPPER_1

Parent: ETHERNET_COMPARATOR:EGR1_MPLS_FLOW_CFG

Instances: 1

Table 428 • **Fields in EGR1_MPLS_LABEL_RANGE_UPPER_1**

Field Name	Bit	Access	Description	Default
EGR1_MPLS_LABEL_RANGE_UPPER_1	19:0	R/W	Upper value for label 1 match range	0xFFFFF

4.11.6.6 ETHERNET_COMPARATOR:EGR1_MPLS_FLOW_CFG:EGR1_MPLS_LABEL_RANGE_LOWER_2

Parent: ETHERNET_COMPARATOR:EGR1_MPLS_FLOW_CFG

Instances: 1

Table 429 • **Fields in EGR1_MPLS_LABEL_RANGE_LOWER_2**

Field Name	Bit	Access	Description	Default
EGR1_MPLS_LABEL_RANGE_LOWER_2	19:0	R/W	Lower value for label 2 match range	0x00000

4.11.6.7 ETHERNET_COMPARATOR:EGR1_MPLS_FLOW_CFG:EGR1_MPLS_LABEL_RANGE_UPPER_2

Parent: ETHERNET_COMPARATOR:EGR1_MPLS_FLOW_CFG

Instances: 1

Table 430 • **Fields in EGR1_MPLS_LABEL_RANGE_UPPER_2**

Field Name	Bit	Access	Description	Default
EGR1_MPLS_LABEL_RANGE_UPPER_2	19:0	R/W	Upper value for label 2 match range	0xFFFFF

4.11.6.8 ETHERNET_COMPARATOR:EGR1_MPLS_FLOW_CFG:EGR1_MPLS_LABEL_RANGE_LOWER_3

Parent: ETHERNET_COMPARATOR:EGR1_MPLS_FLOW_CFG

Instances: 1

Table 431 • **Fields in EGR1_MPLS_LABEL_RANGE_LOWER_3**

Field Name	Bit	Access	Description	Default
EGR1_MPLS_LABEL_RANGE_LOWER_3	19:0	R/W	Lower value for label 3 match range	0x00000

4.11.6.9 ETHERNET_COMPARATOR:EGR1_MPLS_FLOW_CFG:EGR1_MPLS_LABEL_RANGE_UPPER_3

Parent: ETHERNET_COMPARATOR:EGR1_MPLS_FLOW_CFG

Instances: 1

Table 432 • **Fields in EGR1_MPLS_LABEL_RANGE_UPPER_3**

Field Name	Bit	Access	Description	Default
EGR1_MPLS_LABEL_RANGE_UPPER_3	19:0	R/W	Upper value for label 3 match range	0xFFFFF

4.11.7 ETHERNET_COMPARATOR:EGR1_IP1_NXT_PROTOCOL

Parent: Egress0 Ethernet Comparator

Instances: 1

Table 433 • **Registers in EGR1_IP1_NXT_PROTOCOL**

Register Name	Offset within Register Group	Instances and Address Spacing	Description	Details
EGR1_IP1_NXT_COMPARATOR	0x00000000	1	IP next comparator control register	Page 261
EGR1_IP1_MODE	0x00000004	1	IP comparator mode	Page 261
EGR1_IP1_PROT_MATCH_1	0x00000008	1	IP match register set 1	Page 262
EGR1_IP1_PROT_MATCH_2_UPPER	0x0000000C	1	Upper portion of match register 2	Page 262

Table 433 • **Registers in EGR1_IP1_NXT_PROTOCOL *(continued)***

Register Name	Offset within Register Group	Instances and Address Spacing	Description	Details
EGR1_IP1_PROT_MATCH_2_LOWER	0x00000010	1	Lower portion of match register 2	Page 262
EGR1_IP1_PROT_MASK_2_UPPER	0x00000014	1	Upper portion of match mask register 2	Page 263
EGR1_IP1_PROT_MASK_2_LOWER	0x00000018	1	Lower portion of match mask register 2	Page 263
EGR1_IP1_PROT_OFFSET_2	0x0000001C	1	IP match offset register set 2	Page 263
EGR1_IP1_UDP_CHKSUM_CFG	0x00000020	1	IP/UDP checksum control register	Page 263
EGR1_IP1_FRAME_SIG_CFG	0x00000024	1	IP frame signature control register	Page 264

4.11.7.1 ETHERNET_COMPARATOR:EGR1_IP1_NXT_PROTOCOL:EGR1_IP1_NXT_COMPARATOR

Parent: ETHERNET_COMPARATOR:EGR1_IP1_NXT_PROTOCOL

Instances: 1

Table 434 • **Fields in EGR1_IP1_NXT_COMPARATOR**

Field Name	Bit	Access	Description	Default
EGR1_IP1_NXT_PROTOCOL	15:8	R/W	Number of bytes in this header, points to the beginning of the next protocol.	0x00
EGR1_IP1_NXT_COMPARATOR	2:0	R/W	Points to the next comparator stage. If this comparator block is not used, this field must be set to 0. 0: Comparator block not used 1: Reserved 2: Reserved 3: IP/UDP/ACH comparator 2 4: Reserved 5: PTP/OAM comparator 6,7: Reserved	0x0

4.11.7.2 ETHERNET_COMPARATOR:EGR1_IP1_NXT_PROTOCOL:EGR1_IP1_MODE

Parent: ETHERNET_COMPARATOR:EGR1_IP1_NXT_PROTOCOL

Instances: 1

Table 435 • **Fields in EGR1_IP1_MODE**

Field Name	Bit	Access	Description	Default
EGR1_IP1_FLOW_OFFSET	12:8	R/W	Points to the source address field in the IP frame. Use 12 for IPv4 and 8 for IPv6.	0x0C

Table 435 • **Fields in EGR1_IP1_MODE *(continued)***

Field Name	Bit	Access	Description	Default
EGR1_IP1_MODE	1:0	R/W	IP mode 0: IPv4 1: IPv6 2: Other protocol, 32-bit address match 3: Other protocol, 128-bit address match	0x0

4.11.7.3 ETHERNET_COMPARATOR:EGR1_IP1_NXT_PROTOCOL:EGR1_IP1_PROT_MATCH_1

Parent: ETHERNET_COMPARATOR:EGR1_IP1_NXT_PROTOCOL

Instances: 1

Table 436 • **Fields in EGR1_IP1_PROT_MATCH_1**

Field Name	Bit	Access	Description	Default
EGR1_IP1_PROT_OFFSET_1	20:16	R/W	Points to the start of this match field relative to the first byte of this protocol	0x00
EGR1_IP1_PROT_MASK_1	15:8	R/W	Mask field for IP_PROT_MATCH_1	0x00
EGR1_IP1_PROT_MATCH_1	7:0	R/W	8-bit match field	0x00

4.11.7.4 ETHERNET_COMPARATOR:EGR1_IP1_NXT_PROTOCOL:EGR1_IP1_PROT_MATCH_2_UPPER

Parent: ETHERNET_COMPARATOR:EGR1_IP1_NXT_PROTOCOL

Instances: 1

Table 437 • **Fields in EGR1_IP1_PROT_MATCH_2_UPPER**

Field Name	Bit	Access	Description	Default
EGR1_IP1_PROT_MATCH_2_UPPER	31:0	R/W	64-bit match register for advancing to the next protocol, upper portion.	0x00000000

4.11.7.5 ETHERNET_COMPARATOR:EGR1_IP1_NXT_PROTOCOL:EGR1_IP1_PROT_MATCH_2_LOWER

Parent: ETHERNET_COMPARATOR:EGR1_IP1_NXT_PROTOCOL

Instances: 1

Table 438 • **Fields in EGR1_IP1_PROT_MATCH_2_LOWER**

Field Name	Bit	Access	Description	Default
EGR1_IP1_PROT_MATCH_2_LOWER	31:0	R/W	64-bit match register for advancing to the next protocol, lower portion.	0x00000000

4.11.7.6 ETHERNET_COMPARATOR:EGR1_IP1_NXT_PROTOCOL:EGR1_IP1_PROT_MASK_2_UPPER

Parent: ETHERNET_COMPARATOR:EGR1_IP1_NXT_PROTOCOL

Instances: 1

Table 439 • **Fields in EGR1_IP1_PROT_MASK_2_UPPER**

Field Name	Bit	Access	Description	Default
EGR1_IP1_PROT_MASK_2_UPPER	31:0	R/W	64-bit match register for advancing to the next protocol, upper portion.	0x00000000

4.11.7.7 ETHERNET_COMPARATOR:EGR1_IP1_NXT_PROTOCOL:EGR1_IP1_PROT_MASK_2_LOWER

Parent: ETHERNET_COMPARATOR:EGR1_IP1_NXT_PROTOCOL

Instances: 1

Table 440 • **Fields in EGR1_IP1_PROT_MASK_2_LOWER**

Field Name	Bit	Access	Description	Default
EGR1_IP1_PROT_MASK_2_LOWER	31:0	R/W	64-bit match register for advancing to the next protocol, lower portion.	0x00000000

4.11.7.8 ETHERNET_COMPARATOR:EGR1_IP1_NXT_PROTOCOL:EGR1_IP1_PROT_OFFSET_2

Parent: ETHERNET_COMPARATOR:EGR1_IP1_NXT_PROTOCOL

Instances: 1

Table 441 • **Fields in EGR1_IP1_PROT_OFFSET_2**

Field Name	Bit	Access	Description	Default
EGR1_IP1_PROT_OFFSET_2	6:0	R/W	Points to the start of match field 2 relative to the first byte of this protocol	0x00

4.11.7.9 ETHERNET_COMPARATOR:EGR1_IP1_NXT_PROTOCOL:EGR1_IP1_UDP_CHKSUM_CFG

Parent: ETHERNET_COMPARATOR:EGR1_IP1_NXT_PROTOCOL

Instances: 1

Table 442 • **Fields in EGR1_IP1_UDP_CHKSUM_CFG**

Field Name	Bit	Access	Description	Default
EGR1_IP1_UDP_CHKSUM_OFFSET	15:8	R/W	Pointer to the IP/UDP checksum field FOR IPv4 frames or to the pad bytes of a IPv6/UDP frame. For IPv4, it points to the bytes that will be cleared. For IPv6, it points to the bytes that will be updated to fix the CRC.	0x00
EGR1_IP1_UDP_CHKSUM_WIDTH	5:4	R/W	Specifies the length of the checksum field in bytes	0x2
EGR1_IP1_UDP_CHKSUM_UPDATE_ENA	1	R/W	This bit and IP_UDP_CHKSUM_CLEAR_ENA CANNOT be set together 0: No pad byte field update 1: Update the pad bytes at the end of the frame	0x0
EGR1_IP1_UDP_CHKSUM_CLEAR_ENA	0	R/W	This bit and IP_UDP_CHKSUM_UPDATE_ENA CANNOT be set together 0: Do not clear the checksum 1: Clear the UDP checksum field in an IPv4 frame	0x0

4.11.7.10 ETHERNET_COMPARATOR:EGR1_IP1_NXT_PROTOCOL:EGR1_IP1_FRAME_SIG_CFG

Parent: ETHERNET_COMPARATOR:EGR1_IP1_NXT_PROTOCOL

Instances: 1

Table 443 • **Fields in EGR1_IP1_FRAME_SIG_CFG**

Field Name	Bit	Access	Description	Default
EGR1_IP1_FRAME_SIG_OFFSET	4:0	R/W	Pointer to the start of the field that will be used for the frame signature. Position is relative to the first header byte of this IP protocol. Only even values are allowed.	0x00

4.11.8 ETHERNET_COMPARATOR:EGR1_IP1_FLOW_CFG

Parent: Egress0 Ethernet Comparator

Instances: 8

Table 444 • **Registers in EGR1_IP1_FLOW_CFG**

Register Name	Offset within Register Group	Instances and Address Spacing	Description	Details
EGR1_IP1_FLOW_ENA	0x00000000	1	IP flow enable register	Page 265

Table 444 • **Registers in EGR1_IP1_FLOW_CFG *(continued)***

Register Name	Offset within Register Group	Instances and Address Spacing	Description	Details
EGR1_IP1_FLOW_MATCH_UPPER	0x00000004	1	Upper portion of the IP flow match register	Page 265
EGR1_IP1_FLOW_MATCH_UPPER_MID	0x00000008	1	Upper mid portion of the IP flow match register	Page 266
EGR1_IP1_FLOW_MATCH_LOWER_MID	0x0000000C	1	Lower mid portion of the IP flow match register	Page 266
EGR1_IP1_FLOW_MATCH_LOWER	0x00000010	1	Lower portion of the IP flow match register	Page 266
EGR1_IP1_FLOW_MASK_UPPER	0x00000014	1	IP flow match mask register, bytes 12-15	Page 266
EGR1_IP1_FLOW_MASK_UPPER_MID	0x00000018	1	IP flow match mask register, bytes 8-11	Page 267
EGR1_IP1_FLOW_MASK_LOWER_MID	0x0000001C	1	IP flow match mask register, bytes 4-7	Page 267
EGR1_IP1_FLOW_MASK_LOWER	0x00000020	1	IP flow match mask register, bytes 0-3	Page 267

4.11.8.1 ETHERNET_COMPARATOR:EGR1_IP1_FLOW_CFG:EGR1_IP1_FLOW_ENA

Parent: ETHERNET_COMPARATOR:EGR1_IP1_FLOW_CFG

Instances: 1

Table 445 • **Fields in EGR1_IP1_FLOW_ENA**

Field Name	Bit	Access	Description	Default
EGR1_IP1_FLOW_MATCH_MODE	9:8	R/W	Match mode 0: Match on source address 1: Match on destination address 2: Match on either source or destination address 3: Reserved	0x0
EGR1_IP1_CHANNEL_MASK	5:4	R/W	Channel mask 0x0: Flow invalid 0x1: Flow valid for channel 0 0x2: Flow valid for channel 1 0x3: Flow valid for both channels	0x3
EGR1_IP1_FLOW_ENA	0	R/W	Flow enable. If this comparator block is not used, all flow enable bits must be set to 0. 0: Flow disabled 1: Flow enabled	0x0

4.11.8.2 ETHERNET_COMPARATOR:EGR1_IP1_FLOW_CFG:EGR1_IP1_FLOW_MATCH_UPPER

Parent: ETHERNET_COMPARATOR:EGR1_IP1_FLOW_CFG

Instances: 1

Table 446 • **Fields in EGR1_IP1_FLOW_MATCH_UPPER**

Field Name	Bit	Access	Description	Default
EGR1_IP1_FLOW_MATCH_UPPER	31:0	R/W	Match field for either the entire 32-bit selected address for IPv4 or the upper 32 bits of the selected address for IPv6	0x00000000

4.11.8.3 ETHERNET_COMPARATOR:EGR1_IP1_FLOW_CFG:EGR1_IP1_FLOW_MATCH_UPPER_MID

Parent: ETHERNET_COMPARATOR:EGR1_IP1_FLOW_CFG

Instances: 1

Table 447 • **Fields in EGR1_IP1_FLOW_MATCH_UPPER_MID**

Field Name	Bit	Access	Description	Default
EGR1_IP1_FLOW_MATCH_UPPER_MID	31:0	R/W	Match bits for the upper middle 32 bits of the IPv6 address	0x00000000

4.11.8.4 ETHERNET_COMPARATOR:EGR1_IP1_FLOW_CFG:EGR1_IP1_FLOW_MATCH_LOWER_MID

Parent: ETHERNET_COMPARATOR:EGR1_IP1_FLOW_CFG

Instances: 1

Table 448 • **Fields in EGR1_IP1_FLOW_MATCH_LOWER_MID**

Field Name	Bit	Access	Description	Default
EGR1_IP1_FLOW_MATCH_LOWER_MID	31:0	R/W	Match bits for the lower middle 32 bits of the IPv6 address	0x00000000

4.11.8.5 ETHERNET_COMPARATOR:EGR1_IP1_FLOW_CFG:EGR1_IP1_FLOW_MATCH_LOWER

Parent: ETHERNET_COMPARATOR:EGR1_IP1_FLOW_CFG

Instances: 1

Table 449 • **Fields in EGR1_IP1_FLOW_MATCH_LOWER**

Field Name	Bit	Access	Description	Default
EGR1_IP1_FLOW_MATCH_LOWER	31:0	R/W	Match bits for the lower 32 bits of the IPv6 address	0x00000000

4.11.8.6 ETHERNET_COMPARATOR:EGR1_IP1_FLOW_CFG:EGR1_IP1_FLOW_MASK_UPPER

Parent: ETHERNET_COMPARATOR:EGR1_IP1_FLOW_CFG

Instances: 1

Table 450 • **Fields in EGR1_IP1_FLOW_MASK_UPPER**

Field Name	Bit	Access	Description	Default
EGR1_IP1_FLOW_MASK_UPPER	31:0	R/W	Address mask for the IP address	0x00000000

4.11.8.7 ETHERNET_COMPARATOR:EGR1_IP1_FLOW_CFG:EGR1_IP1_FLOW_MASK_UPPER_MID

Parent: ETHERNET_COMPARATOR:EGR1_IP1_FLOW_CFG

Instances: 1

Table 451 • **Fields in EGR1_IP1_FLOW_MASK_UPPER_MID**

Field Name	Bit	Access	Description	Default
EGR1_IP1_FLOW_MASK_UPPER_MID	31:0	R/W	These bits must be all 0 for IPv4 and any 32-bit address match mode	0x00000000

4.11.8.8 ETHERNET_COMPARATOR:EGR1_IP1_FLOW_CFG:EGR1_IP1_FLOW_MASK_LOWER_MID

Parent: ETHERNET_COMPARATOR:EGR1_IP1_FLOW_CFG

Instances: 1

Table 452 • **Fields in EGR1_IP1_FLOW_MASK_LOWER_MID**

Field Name	Bit	Access	Description	Default
EGR1_IP1_FLOW_MASK_LOWER_MID	31:0	R/W	These bits must be all 0 for IPv4 and any 32-bit address match mode	0x00000000

4.11.8.9 ETHERNET_COMPARATOR:EGR1_IP1_FLOW_CFG:EGR1_IP1_FLOW_MASK_LOWER

Parent: ETHERNET_COMPARATOR:EGR1_IP1_FLOW_CFG

Instances: 1

Table 453 • **Fields in EGR1_IP1_FLOW_MASK_LOWER**

Field Name	Bit	Access	Description	Default
EGR1_IP1_FLOW_MASK_LOWER	31:0	R/W	These bits must be all 0 for IPv4 and any 32-bit address match mode	0x00000000

4.11.9 ETHERNET_COMPARATOR:EGR1_IP2_NXT_PROTOCOL

Parent: Egress0 Ethernet Comparator

Instances: 1

Table 454 • **Registers in EGR1_IP2_NXT_PROTOCOL**

Register Name	Offset within Register Group	Instances and Address Spacing	Description	Details
EGR1_IP2_NXT_COMPARATOR	0x00000000	1	IP next comparator control register	Page 268
EGR1_IP2_MODE	0x00000004	1	IP comparator mode	Page 268
EGR1_IP2_PROT_MATCH_1	0x00000008	1	IP match register set 1	Page 269
EGR1_IP2_PROT_MATCH_2_UPPER	0x0000000C	1	Upper portion of match register 2	Page 269
EGR1_IP2_PROT_MATCH_2_LOWER	0x00000010	1	Lower portion of match register 2	Page 269
EGR1_IP2_PROT_MASK_2_UPPER	0x00000014	1	Upper portion of match mask register 2	Page 270
EGR1_IP2_PROT_MASK_2_LOWER	0x00000018	1	Lower portion of match mask register 2	Page 270
EGR1_IP2_PROT_OFFSET_2	0x0000001C	1	IP match offset register set 2	Page 270
EGR1_IP2_UDP_CHKSUM_CFG	0x00000020	1	IP/UDP checksum control register	Page 270
EGR1_IP2_FRAME_SIG_CFG	0x00000024	1	IP frame signature control register	Page 271

4.11.9.1 ETHERNET_COMPARATOR:EGR1_IP2_NXT_PROTOCOL:EGR1_IP2_NXT_COMPARATOR

Parent: ETHERNET_COMPARATOR:EGR1_IP2_NXT_PROTOCOL

Instances: 1

Table 455 • **Fields in EGR1_IP2_NXT_COMPARATOR**

Field Name	Bit	Access	Description	Default
EGR1_IP2_NXT_PROTOCOL	15:8	R/W	Number of bytes in this header, points to the beginning of the next protocol.	0x00
EGR1_IP2_NXT_COMPARATOR	2:0	R/W	Points to the next comparator stage. If this comparator block is not used, this field must be set to 0. 0: Comparator block not used 1: Reserved 2: Reserved 3: Reserved 4: Reserved 5: PTP/OAM comparator 6,7: Reserved	0x0

4.11.9.2 ETHERNET_COMPARATOR:EGR1_IP2_NXT_PROTOCOL:EGR1_IP2_MODE

Parent: ETHERNET_COMPARATOR:EGR1_IP2_NXT_PROTOCOL

Instances: 1

Table 456 • **Fields in EGR1_IP2_MODE**

Field Name	Bit	Access	Description	Default
EGR1_IP2_FLOW_OFFSET	12:8	R/W	Points to the source address field in the IP frame. Use 12 for IPv4 and 8 for IPv6	0x0C
EGR1_IP2_MODE	1:0	R/W	IP mode 0: IPv4 1: IPv6 2: Other protocol, 32-bit address match 3: Other protocol, 128-bit address match	0x0

4.11.9.3 ETHERNET_COMPARATOR:EGR1_IP2_NXT_PROTOCOL:EGR1_IP2_PROT_MATCH_1

Parent: ETHERNET_COMPARATOR:EGR1_IP2_NXT_PROTOCOL

Instances: 1

Table 457 • **Fields in EGR1_IP2_PROT_MATCH_1**

Field Name	Bit	Access	Description	Default
EGR1_IP2_PROT_OFFSET_1	20:16	R/W	Points to the start of this match field relative to the first byte of this protocol	0x00
EGR1_IP2_PROT_MASK_1	15:8	R/W	Mask field for IP_PROT_MATCH_1	0x00
EGR1_IP2_PROT_MATCH_1	7:0	R/W	8-bit match field	0x00

4.11.9.4 ETHERNET_COMPARATOR:EGR1_IP2_NXT_PROTOCOL:EGR1_IP2_PROT_MATCH_2_UPPER

Parent: ETHERNET_COMPARATOR:EGR1_IP2_NXT_PROTOCOL

Instances: 1

Table 458 • **Fields in EGR1_IP2_PROT_MATCH_2_UPPER**

Field Name	Bit	Access	Description	Default
EGR1_IP2_PROT_MATCH_2_UPPER	31:0	R/W	64-bit match register for advancing to the next protocol, upper portion	0x00000000

4.11.9.5 ETHERNET_COMPARATOR:EGR1_IP2_NXT_PROTOCOL:EGR1_IP2_PROT_MATCH_2_LOWER

Parent: ETHERNET_COMPARATOR:EGR1_IP2_NXT_PROTOCOL

Instances: 1

Table 459 • **Fields in EGR1_IP2_PROT_MATCH_2_LOWER**

Field Name	Bit	Access	Description	Default
EGR1_IP2_PROT_MATCH_2_LOWER	31:0	R/W	64-bit match register for advancing to the next protocol, lower portion	0x00000000

4.11.9.6 ETHERNET_COMPARATOR:EGR1_IP2_NXT_PROTOCOL:EGR1_IP2_PROT_MASK_2_UPPER

Parent: ETHERNET_COMPARATOR:EGR1_IP2_NXT_PROTOCOL

Instances: 1

Table 460 • **Fields in EGR1_IP2_PROT_MASK_2_UPPER**

Field Name	Bit	Access	Description	Default
EGR1_IP2_PROT_MASK_2_UPPER	31:0	R/W	64-bit match register for advancing to the next protocol, upper portion.	0x00000000

4.11.9.7 ETHERNET_COMPARATOR:EGR1_IP2_NXT_PROTOCOL:EGR1_IP2_PROT_MASK_2_LOWER

Parent: ETHERNET_COMPARATOR:EGR1_IP2_NXT_PROTOCOL

Instances: 1

Table 461 • **Fields in EGR1_IP2_PROT_MASK_2_LOWER**

Field Name	Bit	Access	Description	Default
EGR1_IP2_PROT_MASK_2_LOWER	31:0	R/W	64-bit match register for advancing to the next protocol, lower portion.	0x00000000

4.11.9.8 ETHERNET_COMPARATOR:EGR1_IP2_NXT_PROTOCOL:EGR1_IP2_PROT_OFFSET_2

Parent: ETHERNET_COMPARATOR:EGR1_IP2_NXT_PROTOCOL

Instances: 1

Table 462 • **Fields in EGR1_IP2_PROT_OFFSET_2**

Field Name	Bit	Access	Description	Default
EGR1_IP2_PROT_OFFSET_2	6:0	R/W	Points to the start of match field 2 relative to the first byte of this protocol	0x00

4.11.9.9 ETHERNET_COMPARATOR:EGR1_IP2_NXT_PROTOCOL:EGR1_IP2_UDP_CHKSUM_CFG

Parent: ETHERNET_COMPARATOR:EGR1_IP2_NXT_PROTOCOL

Instances: 1

Table 463 • **Fields in EGR1_IP2_UDP_CHKSUM_CFG**

Field Name	Bit	Access	Description	Default
EGR1_IP2_UDP_CHKSUM_OFFSET	15:8	R/W	Pointer to the IP/UDP checksum field FOR IPv4 frames or to the pad bytes of a IPv6/UDP frame. For IPv4, it points to the bytes that will be cleared. For IPv6, it points to the bytes that will be updated to fix the CRC.	0x00
EGR1_IP2_UDP_CHKSUM_WIDTH	5:4	R/W	Specifies the length of the checksum field in bytes	0x2
EGR1_IP2_UDP_CHKSUM_UPDATE_ENA	1	R/W	This bit and IP_UDP_CHKSUM_CLEAR_ENA CANNOT be set together 0: No pad byte field update 1: Update the pad bytes at the end of the frame	0x0
EGR1_IP2_UDP_CHKSUM_CLEAR_ENA	0	R/W	This bit and IP_UDP_CHKSUM_UPDATE_ENA CANNOT be set together 0: Do not clear the checksum 1: Clear the UDP checksum field in an IPv4 frame	0x0

4.11.9.10 ETHERNET_COMPARATOR:EGR1_IP2_NXT_PROTOCOL:EGR1_IP2_FRAME_SIG_CFG

Parent: ETHERNET_COMPARATOR:EGR1_IP2_NXT_PROTOCOL

Instances: 1

Table 464 • **Fields in EGR1_IP2_FRAME_SIG_CFG**

Field Name	Bit	Access	Description	Default
EGR1_IP2_FRAME_SIG_OFFSET	4:0	R/W	Pointer to the start of the field that will be used for the frame signature. Position is relative to the first header byte of this IP protocol. Only even values are allowed.	0x00

4.11.10 ETHERNET_COMPARATOR:EGR1_IP2_FLOW_CFG

Parent: Egress0 Ethernet Comparator

Instances: 8

Table 465 • **Registers in EGR1_IP2_FLOW_CFG**

Register Name	Offset within Register Group	Instances and Address Spacing	Description	Details
EGR1_IP2_FLOW_ENA	0x00000000	1	IP flow enable register	Page 272

Table 465 • **Registers in EGR1_IP2_FLOW_CFG *(continued)***

Register Name	Offset within Register Group	Instances and Address Spacing	Description	Details
EGR1_IP2_FLOW_MATCH_UPPER	0x00000004	1	Upper portion of the IP flow match register	Page 272
EGR1_IP2_FLOW_MATCH_UPPER_MID	0x00000008	1	Upper mid portion of the IP flow match register	Page 273
EGR1_IP2_FLOW_MATCH_LOWER_MID	0x0000000C	1	Lower mid portion of the IP flow match register	Page 273
EGR1_IP2_FLOW_MATCH_LOWER	0x00000010	1	Lower portion of the IP flow match register	Page 273
EGR1_IP2_FLOW_MASK_UPPER	0x00000014	1	IP flow match mask register, bytes 12-15	Page 273
EGR1_IP2_FLOW_MASK_UPPER_MID	0x00000018	1	IP flow match mask register, bytes 8-11	Page 274
EGR1_IP2_FLOW_MASK_LOWER_MID	0x0000001C	1	IP flow match mask register, bytes 4-7	Page 274
EGR1_IP2_FLOW_MASK_LOWER	0x00000020	1	IP flow match mask register, bytes 0-3	Page 274

4.11.10.1 ETHERNET_COMPARATOR:EGR1_IP2_FLOW_CFG:EGR1_IP2_FLOW_ENA

Parent: ETHERNET_COMPARATOR:EGR1_IP2_FLOW_CFG

Instances: 1

Table 466 • **Fields in EGR1_IP2_FLOW_ENA**

Field Name	Bit	Access	Description	Default
EGR1_IP2_FLOW_MATCH_MODE	9:8	R/W	Match mode 0: Match on source address 1: Match on destination address 2: Match on either source or destination address 3: Reserved	0x0
EGR1_IP2_CHANNEL_MASK	5:4	R/W	Channel mask 0x0: Flow invalid 0x1: Flow valid for channel 0 0x2: Flow valid for channel 1 0x3: Flow valid for both channels	0x3
EGR1_IP2_FLOW_ENA	0	R/W	Flow enable. If this comparator block is not used, all flow enable bits must be set to 0. 0: Flow disabled 1: Flow enabled	0x0

4.11.10.2 ETHERNET_COMPARATOR:EGR1_IP2_FLOW_CFG:EGR1_IP2_FLOW_MATCH_UPPER

Parent: ETHERNET_COMPARATOR:EGR1_IP2_FLOW_CFG

Instances: 1

Table 467 • **Fields in EGR1_IP2_FLOW_MATCH_UPPER**

Field Name	Bit	Access	Description	Default
EGR1_IP2_FLOW_MATCH_UPPER	31:0	R/W	Match field for either the entire 32-bit selected address for IPv4 or the upper 32 bits of the selected address for IPv6	0x00000000

4.11.10.3 ETHERNET_COMPARATOR:EGR1_IP2_FLOW_CFG:EGR1_IP2_FLOW_MATCH_UPPER_MID

Parent: ETHERNET_COMPARATOR:EGR1_IP2_FLOW_CFG

Instances: 1

Table 468 • **Fields in EGR1_IP2_FLOW_MATCH_UPPER_MID**

Field Name	Bit	Access	Description	Default
EGR1_IP2_FLOW_MATCH_UPPER_MID	31:0	R/W	Match bits for the upper middle 32 bits of the IPv6 address	0x00000000

4.11.10.4 ETHERNET_COMPARATOR:EGR1_IP2_FLOW_CFG:EGR1_IP2_FLOW_MATCH_LOWER_MID

Parent: ETHERNET_COMPARATOR:EGR1_IP2_FLOW_CFG

Instances: 1

Table 469 • **Fields in EGR1_IP2_FLOW_MATCH_LOWER_MID**

Field Name	Bit	Access	Description	Default
EGR1_IP2_FLOW_MATCH_LOWER_MID	31:0	R/W	Match bits for the lower middle 32 bits of the IPv6 address	0x00000000

4.11.10.5 ETHERNET_COMPARATOR:EGR1_IP2_FLOW_CFG:EGR1_IP2_FLOW_MATCH_LOWER

Parent: ETHERNET_COMPARATOR:EGR1_IP2_FLOW_CFG

Instances: 1

Table 470 • **Fields in EGR1_IP2_FLOW_MATCH_LOWER**

Field Name	Bit	Access	Description	Default
EGR1_IP2_FLOW_MATCH_LOWER	31:0	R/W	Match bits for the lower 32 bits of the IPv6 address	0x00000000

4.11.10.6 ETHERNET_COMPARATOR:EGR1_IP2_FLOW_CFG:EGR1_IP2_FLOW_MASK_UPPER

Parent: ETHERNET_COMPARATOR:EGR1_IP2_FLOW_CFG

Instances: 1

Table 471 • **Fields in EGR1_IP2_FLOW_MASK_UPPER**

Field Name	Bit	Access	Description	Default
EGR1_IP2_FLOW_MASK_UPPER	31:0	R/W	Address mask for the IP address	0x00000000

4.11.10.7 ETHERNET_COMPARATOR:EGR1_IP2_FLOW_CFG:EGR1_IP2_FLOW_MASK_UPPER_MID

Parent: ETHERNET_COMPARATOR:EGR1_IP2_FLOW_CFG

Instances: 1

Table 472 • **Fields in EGR1_IP2_FLOW_MASK_UPPER_MID**

Field Name	Bit	Access	Description	Default
EGR1_IP2_FLOW_MASK_UPPER_MID	31:0	R/W	These bits must be all 0 for IPv4 and any 32-bit address match mode	0x00000000

4.11.10.8 ETHERNET_COMPARATOR:EGR1_IP2_FLOW_CFG:EGR1_IP2_FLOW_MASK_LOWER_MID

Parent: ETHERNET_COMPARATOR:EGR1_IP2_FLOW_CFG

Instances: 1

Table 473 • **Fields in EGR1_IP2_FLOW_MASK_LOWER_MID**

Field Name	Bit	Access	Description	Default
EGR1_IP2_FLOW_MASK_LOWER_MID	31:0	R/W	These bits must be all 0 for IPv4 and any 32-bit address match mode	0x00000000

4.11.10.9 ETHERNET_COMPARATOR:EGR1_IP2_FLOW_CFG:EGR1_IP2_FLOW_MASK_LOWER

Parent: ETHERNET_COMPARATOR:EGR1_IP2_FLOW_CFG

Instances: 1

Table 474 • **Fields in EGR1_IP2_FLOW_MASK_LOWER**

Field Name	Bit	Access	Description	Default
EGR1_IP2_FLOW_MASK_LOWER	31:0	R/W	These bits must be all 0 for IPv4 and any 32-bit address match mode	0x00000000

4.11.11 ETHERNET_COMPARATOR:EGR1_PTP_FLOW

Parent: Egress0 Ethernet Comparator

Instances: 6

Table 475 • **Registers in EGR1_PTP_FLOW**

Register Name	Offset within Register Group	Instances and Address Spacing	Description	Details
EGR1_PTP_FLOW_ENA	0x00000000	1	PTP/OAM flow enable	Page 275
EGR1_PTP_FLOW_MATCH_UPPER	0x00000004	1	Upper half of PTP/OAM flow match field	Page 275
EGR1_PTP_FLOW_MATCH_LOWER	0x00000008	1	Lower half of PTP/OAM flow match field	Page 276
EGR1_PTP_FLOW_MASK_UPPER	0x0000000C	1	Upper half of PTP/OAM flow match mask	Page 276
EGR1_PTP_FLOW_MASK_LOWER	0x00000010	1	Lower half of PTP/OAM flow match mask	Page 276
EGR1_PTP_DOMAIN_RANGE	0x00000014	1	PTP/OAM range match register	Page 276
EGR1_PTP_ACTION	0x00000018	1	PTP action control register	Page 277
EGR1_PTP_ACTION_2	0x0000001C	1	PTP action control register 2	Page 278
EGR1_PTP_ZERO_FIELD_CTL	0x00000020	1	Zero field control register	Page 278

4.11.11.1 ETHERNET_COMPARATOR:EGR1_PTP_FLOW:EGR1_PTP_FLOW_ENA

Parent: ETHERNET_COMPARATOR:EGR1_PTP_FLOW

Instances: 1

Table 476 • **Fields in EGR1_PTP_FLOW_ENA**

Field Name	Bit	Access	Description	Default
EGR1_PTP_CHANNEL_MASK	5:4	R/W	Channel mask 0x0: Flow invalid 0x1: Flow valid for channel 0 0x2: Flow valid for channel 1 0x3: Flow valid for both channels	0x3
EGR1_PTP_FLOW_ENA	0	R/W	Flow enable	0x0

4.11.11.2 ETHERNET_COMPARATOR:EGR1_PTP_FLOW:EGR1_PTP_FLOW_MATCH_UPPER

Parent: ETHERNET_COMPARATOR:EGR1_PTP_FLOW

Instances: 1

Table 477 • **Fields in EGR1_PTP_FLOW_MATCH_UPPER**

Field Name	Bit	Access	Description	Default
EGR1_PTP_FLOW_MATCH_UPPER	31:0	R/W	PTP flow match, upper 32 bit	0x00000000

4.11.11.3 ETHERNET_COMPARATOR:EGR1_PTP_FLOW:EGR1_PTP_FLOW_MATCH_LOWER

Parent: ETHERNET_COMPARATOR:EGR1_PTP_FLOW

Instances: 1

Table 478 • **Fields in EGR1_PTP_FLOW_MATCH_LOWER**

Field Name	Bit	Access	Description	Default
EGR1_PTP_FLOW_MATCH_LOWER	31:0	R/W	PTP flow match, lower 32 bit	0x00000000

4.11.11.4 ETHERNET_COMPARATOR:EGR1_PTP_FLOW:EGR1_PTP_FLOW_MASK_UPPER

Parent: ETHERNET_COMPARATOR:EGR1_PTP_FLOW

Instances: 1

Table 479 • **Fields in EGR1_PTP_FLOW_MASK_UPPER**

Field Name	Bit	Access	Description	Default
EGR1_PTP_FLOW_MASK_UPPER	31:0	R/W	PTP flow mask, upper 32 bit	0x00000000

4.11.11.5 ETHERNET_COMPARATOR:EGR1_PTP_FLOW:EGR1_PTP_FLOW_MASK_LOWER

Parent: ETHERNET_COMPARATOR:EGR1_PTP_FLOW

Instances: 1

Table 480 • **Fields in EGR1_PTP_FLOW_MASK_LOWER**

Field Name	Bit	Access	Description	Default
EGR1_PTP_FLOW_MASK_LOWER	31:0	R/W	PTP flow mask, lower 32 bit	0x00000000

4.11.11.6 ETHERNET_COMPARATOR:EGR1_PTP_FLOW:EGR1_PTP_DOMAIN_RANGE

Parent: ETHERNET_COMPARATOR:EGR1_PTP_FLOW

Instances: 1

Table 481 • **Fields in EGR1_PTP_DOMAIN_RANGE**

Field Name	Bit	Access	Description	Default
EGR1_PTP_DOMAIN_RANGE_OFFSET	28:24	R/W	PTP domain range offset	0x00
EGR1_PTP_DOMAIN_RANGE_UPPER	23:16	R/W	Upper range of PTP domain field to match	0xFF

Table 481 • **Fields in EGR1_PTP_DOMAIN_RANGE *(continued)***

Field Name	Bit	Access	Description	Default
EGR1_PTP_DOMAIN_RANGE_LOWER	15:8	R/W	Lower range of PTP domain field to match	0x00
EGR1_PTP_DOMAIN_RANGE_ENA	0	R/W	Enable PTP domain range checking	0x0

4.11.11.7 ETHERNET_COMPARATOR:EGR1_PTP_FLOW:EGR1_PTP_ACTION

Parent: ETHERNET_COMPARATOR:EGR1_PTP_FLOW

Instances: 1

Table 482 • **Fields in EGR1_PTP_ACTION**

Field Name	Bit	Access	Description	Default
EGR1_PTP_MOD_FRAME_STAT_UPDATE	28	R/W	Modified frame status update 0: Do not signal the rewriter to update value of the Modified Frame Status bit 1: Signal the rewriter to update value of the Modified Frame Status bit	0x0
EGR1_PTP_MOD_FRAME_BYTE_OFFSET	26:24	R/W	Indicates the position relative to the start of the PTP frame in bytes where the Modified Frame Status bit resides	0x0
EGR1_PTP_SUB_DELAY_ASYM_ENA	21	R/W	Enable subtract delay asymmetry signal 0: Do not signal the timestamp block to subtract the asymmetry delay 1: Signal the timestamp block to subtract the asymmetry delay	0x0
EGR1_PTP_ADD_DELAY_ASYM_ENA	20	R/W	Enable add delay asymmetry signal 0: Do not signal the timestamp block to add the asymmetry delay 1: Signal the timestamp block to add the asymmetry delay	0x0
EGR1_PTP_TIME_STRG_FIELD_OFFSET	15:10	R/W	Time storage field offset The location in a PTP frame where a time value can be stored or read	0x00
EGR1_PTP_CORR_FIELD_OFFSET	9:5	R/W	Points to the location of the correction field for updating the timestamp. Location is relative to the first byte of the PTP/OAM header. **Note:** If this flow is being used to match OAM frames, set this register to 4	0x00
EGR1_PTP_SAVE_LOCAL_TIME	4	R/W	Enable saving time 0: Do not save the time to the timestamp FIFO 1: Save the local time to the timestamp FIFO	0x0

Table 482 • **Fields in EGR1_PTP_ACTION *(continued)***

Field Name	Bit	Access	Description	Default
EGR1_PTP_COMMAND	3:0	R/W	PTP action command 0: NOP 1: SUB 2: SUB_P2P 3: ADD 4: SUB_ADD 5: WRITE_1588 6: WRITE_P2P (deprecated) 7: WRITE_NS 8: WRITE_NS_P2P	0x0

4.11.11.8 ETHERNET_COMPARATOR:EGR1_PTP_FLOW:EGR1_PTP_ACTION_2

Parent: ETHERNET_COMPARATOR:EGR1_PTP_FLOW

Instances: 1

Table 483 • **Fields in EGR1_PTP_ACTION_2**

Field Name	Bit	Access	Description	Default
EGR1_PTP_NEW_CF_LOC	23:16	R/W	Location of the new correction field relative to the PTP header start. Only even values are allowed.	0x00
EGR1_PTP_REWRITE_OFFSET	15:8	R/W	Points to where in the frame relative to the SFD that the timestamp should be updated	0x00
EGR1_PTP_REWRITE_BYTES	3:0	R/W	Number of bytes in the PTP or OAM frame that must be modified by the rewriter for the timestamp	0x0

4.11.11.9 ETHERNET_COMPARATOR:EGR1_PTP_FLOW:EGR1_PTP_ZERO_FIELD_CTL

Parent: ETHERNET_COMPARATOR:EGR1_PTP_FLOW

Instances: 1

Table 484 • **Fields in EGR1_PTP_ZERO_FIELD_CTL**

Field Name	Bit	Access	Description	Default
EGR1_PTP_ZERO_FIELD_OFFSET	13:8	R/W	Points to a location in the PTP/OAM frame relative to the start of the PTP header that will be zeroed if this function is enabled	0x00
EGR1_PTP_ZERO_FIELD_BYTE_CNT	3:0	R/W	The number of bytes to be zeroed. If this field is 0, then this function is not enabled.	0x0

4.11.12 ETHERNET_COMPARATOR:EGR1_PTP_IP_CHKSUM_CTL

Parent: Egress0 Ethernet Comparator

Instances: 1

Table 485 • **Registers in EGR1_PTP_IP_CHKSUM_CTL**

Register Name	Offset within Register Group	Instances and Address Spacing	Description	Details
EGR1_PTP_IP_CKSUM_SEL	0x00000000	1	IP checksum block select	Page 279

4.11.12.1 ETHERNET_COMPARATOR:EGR1_PTP_IP_CHKSUM_CTL:EGR1_PTP_IP_CKSUM_SEL

Parent: ETHERNET_COMPARATOR:EGR1_PTP_IP_CHKSUM_CTL

Instances: 1

Table 486 • **Fields in EGR1_PTP_IP_CKSUM_SEL**

Field Name	Bit	Access	Description	Default
EGR1_PTP_IP_CHKSUM_SEL	0	R/W	IP checksum controls selection 0: Use the IP checksum controls from IP comparator 1 1: Use the IP checksum controls from IP comparator 2	0x0

4.11.13 ETHERNET_COMPARATOR:EGR1_FRAME_SIG_CFG

Parent: Egress0 Ethernet Comparator

Instances: 1

Table 487 • **Registers in EGR1_FRAME_SIG_CFG**

Register Name	Offset within Register Group	Instances and Address Spacing	Description	Details
EGR1_FSB_CFG	0x00000000	1	Frame signature builder mode configuration	Page 279
EGR1_FSB_MAP_REG_0	0x00000004	1	Frame signature builder mapping register 0	Page 280
EGR1_FSB_MAP_REG_1	0x00000008	1	Frame signature builder mapping register 1	Page 280
EGR1_FSB_MAP_REG_2	0x0000000C	1	Frame signature builder mapping register 2	Page 281
EGR1_FSB_MAP_REG_3	0x00000010	1	Frame signature builder mapping register 3	Page 281

4.11.13.1 ETHERNET_COMPARATOR:EGR1_FRAME_SIG_CFG:EGR1_FSB_CFG

Parent: ETHERNET_COMPARATOR:EGR1_FRAME_SIG_CFG

Instances: 1

Table 488 • **Fields in EGR1_FSB_CFG**

Field Name	Bit	Access	Description	Default
EGR1_FSB_ADR_SEL	1:0	R/W	0: Use the address from Ethernet block 1 1: Use the address from Ethernet block 2 2: Use the address from IP block 1 3: Use the address from IP block 2	0x0

4.11.13.2 ETHERNET_COMPARATOR:EGR1_FRAME_SIG_CFG:EGR1_FSB_MAP_REG_0

Parent: ETHERNET_COMPARATOR:EGR1_FRAME_SIG_CFG

Instances: 1

This register selects bytes to pack into the frame signature vector. The frame signature vector is 16 bytes long. The source bytes are as follows:

select	source	select	source	select	source	select	source
0	PTP hdr byte 31	1	PTP hdr byte 30	2	PTP hdr byte 29	3	PTP hdr byte 28
4	PTP hdr byte 27	5	PTP hdr byte 26	6	PTP hdr byte 25	7	PTP hdr byte 24
8	PTP hdr byte 23	9	PTP hdr byte 22	10	PTP hdr byte 21	11	PTP hdr byte 20
12	PTP hdr byte 19	13	PTP hdr byte 18	14	PTP hdr byte 17	15	PTP hdr byte 16
16	PTP hdr byte 15	17	PTP hdr byte 14	18	PTP hdr byte 13	19	PTP hdr byte 12
20	PTP hdr byte 11	21	PTP hdr byte 10	22	PTP hdr byte 9	23	PTP hdr byte 8
24	PTP hdr byte 6	25	PTP hdr byte 4	26	PTP hdr byte 0	27	reserved
28	address byte 0	29	address byte 1	30	addess byte 2	31	address byte 3
32	address byte 4	33	address byte 5	34	addess byte 6	35	address byte 7

all other select values reserved

Table 489 • **Fields in EGR1_FSB_MAP_REG_0**

Field Name	Bit	Access	Description	Default
EGR1_FSB_MAP_4	29:24	R/W	Frame signature byte 4 select	0x04
EGR1_FSB_MAP_3	23:18	R/W	Frame signature byte 3 select	0x03
EGR1_FSB_MAP_2	17:12	R/W	Frame signature byte 2 select	0x02
EGR1_FSB_MAP_1	11:6	R/W	Frame signature byte 1 select	0x01
EGR1_FSB_MAP_0	5:0	R/W	Frame signature byte 0 select	0x00

4.11.13.3 ETHERNET_COMPARATOR:EGR1_FRAME_SIG_CFG:EGR1_FSB_MAP_REG_1

Parent: ETHERNET_COMPARATOR:EGR1_FRAME_SIG_CFG

Instances: 1

Table 490 • **Fields in EGR1_FSB_MAP_REG_1**

Field Name	Bit	Access	Description	Default
EGR1_FSB_MAP_9	29:24	R/W	Frame signature byte 9 select	0x09
EGR1_FSB_MAP_8	23:18	R/W	Frame signature byte 8 select	0x08
EGR1_FSB_MAP_7	17:12	R/W	Frame signature byte 7 select	0x07
EGR1_FSB_MAP_6	11:6	R/W	Frame signature byte 6 select	0x06
EGR1_FSB_MAP_5	5:0	R/W	Frame signature byte 5 select	0x05

4.11.13.4 ETHERNET_COMPARATOR:EGR1_FRAME_SIG_CFG:EGR1_FSB_MAP_REG_2

Parent: ETHERNET_COMPARATOR:EGR1_FRAME_SIG_CFG

Instances: 1

Table 491 • **Fields in EGR1_FSB_MAP_REG_2**

Field Name	Bit	Access	Description	Default
EGR1_FSB_MAP_14	29:24	R/W	Frame signature byte 14 select	0x0E
EGR1_FSB_MAP_13	23:18	R/W	Frame signature byte 13 select	0x0D
EGR1_FSB_MAP_12	17:12	R/W	Frame signature byte 12 select	0x0C
EGR1_FSB_MAP_11	11:6	R/W	Frame signature byte 11 select	0x0B
EGR1_FSB_MAP_10	5:0	R/W	Frame signature byte 10 select	0x0A

4.11.13.5 ETHERNET_COMPARATOR:EGR1_FRAME_SIG_CFG:EGR1_FSB_MAP_REG_3

Parent: ETHERNET_COMPARATOR:EGR1_FRAME_SIG_CFG

Instances: 1

Table 492 • **Fields in EGR1_FSB_MAP_REG_3**

Field Name	Bit	Access	Description	Default
EGR1_FSB_MAP_15	5:0	R/W	Frame signature byte 15 select	0x0F

4.12 Ingress1 Ethernet Comparator

Table 493 • **Register Groups in Ingress1 Ethernet Comparator**

Register Group Name	Offset within Target	Instances and Address Spacing	Description	Details
INGR1_ETH1_NXT_PROTOCOL	0x00000000	1	Ethernet next protocol configuration	Page 282

Table 493 • **Register Groups in Ingress1 Ethernet Comparator *(continued)***

Register Group Name	Offset within Target	Instances and Address Spacing	Description	Details
INGR1_ETH1_FLOW_CFG	0x00000040	8 0x00000040	Ethernet flow configuration	Page 284
INGR1_ETH2_NXT_PROTOCOL	0x00000240	1	Ethernet next protocol configuration	Page 287
INGR1_ETH2_FLOW_CFG	0x00000280	8 0x00000040	Ethernet flow configuration	Page 289
INGR1_MPLS_NXT_COMPARATOR	0x00000480	1	MPLS next protocol register	Page 292
INGR1_MPLS_FLOW_CFG	0x000004C0	8 0x00000040	MPLS flow configuration	Page 293
INGR1_IP1_NXT_PROTOCOL	0x000006C0	1	IP1 next protocol	Page 296
INGR1_IP1_FLOW_CFG	0x00000700	8 0x00000040	IP1 flow configuration	Page 300
INGR1_IP2_NXT_PROTOCOL	0x00000900	1	IP2 next protocol	Page 303
INGR1_IP2_FLOW_CFG	0x00000940	8 0x00000040	IP2 flow configuration	Page 307
INGR1_PTP_FLOW	0x00000B40	6 0x00000040	PTP flow configuration	Page 311
INGR1_PTP_IP_CHKSUM_CTL	0x00000CC0	1	IP checksum field control	Page 315

4.12.1 ETHERNET_COMPARATOR:INGR1_ETH1_NXT_PROTOCOL

Parent: Egress0 Ethernet Comparator

Instances: 1

Table 494 • **Registers in INGR1_ETH1_NXT_PROTOCOL**

Register Name	Offset within Register Group	Instances and Address Spacing	Description	Details
INGR1_ETH1_NXT_PROTOCOL	0x00000000	1	Ethernet next protocol register	Page 282
INGR1_ETH1_VLAN_TPID_CFG	0x00000004	1	VLAN TPID configuration	Page 283
INGR1_ETH1_TAG_MODE	0x00000008	1	Ethernet tag mode	Page 283
INGR1_ETH1_ETYPE_MATCH	0x0000000C	1	Ethertype match register	Page 283

4.12.1.1 ETHERNET_COMPARATOR:INGR1_ETH1_NXT_PROTOCOL:INGR1_ETH1_NXT_PROTOCOL

Parent: ETHERNET_COMPARATOR:INGR1_ETH1_NXT_PROTOCOL

Instances: 1

Table 495 • **Fields in INGR1_ETH1_NXT_PROTOCOL**

Field Name	Bit	Access	Description	Default
INGR1_ETH1_FRAME_SIG_OFFSET	20:16	R/W	Frame signature offset. Points to the start of the byte field in the Ethernet frame that will be used for the frame signature.	0x00
INGR1_ETH1_NXT_COMPARATOR	2:0	R/W	Points to the next comparator block after this Ethernet block 0: Reserved 1: Ethernet comparator 2 2: IP/UDP/ACH comparator 1 3: IP/UDP/ACH comparator 2 4: MPLS comparator 5: PTP/OAM comparator 6,7: Reserved	0x0

4.12.1.2 ETHERNET_COMPARATOR:INGR1_ETH1_NXT_PROTOCOL:INGR1_ETH1_VLAN_TPID_CFG

Parent: ETHERNET_COMPARATOR:INGR1_ETH1_NXT_PROTOCOL

Instances: 1

Table 496 • **Fields in INGR1_ETH1_VLAN_TPID_CFG**

Field Name	Bit	Access	Description	Default
INGR1_ETH1_VLAN_TPID_CFG	31:16	R/W	Configurable VLAN TPID (S or B-tag)	0x88A8

4.12.1.3 ETHERNET_COMPARATOR:INGR1_ETH1_NXT_PROTOCOL:INGR1_ETH1_TAG_MODE

Parent: ETHERNET_COMPARATOR:INGR1_ETH1_NXT_PROTOCOL

Instances: 1

Table 497 • **Fields in INGR1_ETH1_TAG_MODE**

Field Name	Bit	Access	Description	Default
INGR1_ETH1_PBB_ENA	0	R/W	This bit enables the presence of PBB. The I-tag match bits are programmed in the ETH1_VLAN_TAG_RANGE registers. The mask bits are programmed in the ETH1_VLAN_TAG2 registers. A B-tag if present is configured in the ETH1_VLAN_TAG1 registers. 0: PBB not enabled 1: Always expect PBB, last tag is always an I-tag	0x0

4.12.1.4 ETHERNET_COMPARATOR:INGR1_ETH1_NXT_PROTOCOL:INGR1_ETH1_ETYPE_MATCH

Parent: ETHERNET_COMPARATOR:INGR1_ETH1_NXT_PROTOCOL

Instances: 1

Table 498 • **Fields in INGR1_ETH1_ETYPE_MATCH**

Field Name	Bit	Access	Description	Default
INGR1_ETH1_ETYPE_MATCH	15:0	R/W	If the Ethertype/length field is an Ethertype, then this register is compared against the value. If the field is a length, the length value is not checked.	0x0000

4.12.2 ETHERNET_COMPARATOR:INGR1_ETH1_FLOW_CFG

Parent: Egress0 Ethernet Comparator

Instances: 8

Table 499 • **Registers in INGR1_ETH1_FLOW_CFG**

Register Name	Offset within Register Group	Instances and Address Spacing	Description	Details
INGR1_ETH1_FLOW_ENABLE	0x00000000	1	Ethernet flow enable	Page 284
INGR1_ETH1_MATCH_MODE	0x00000004	1	Ethernet protocol match mode	Page 285
INGR1_ETH1_ADDR_MATCH_1	0x00000008	1	Ethernet address match part 1	Page 286
INGR1_ETH1_ADDR_MATCH_2	0x0000000C	1	Ethernet address match part 2	Page 286
INGR1_ETH1_VLAN_TAG_RANGE_I_TAG	0x00000010	1	Ethernet VLAN tag range match register	Page 286
INGR1_ETH1_VLAN_TAG1	0x00000014	1	VLAN tag 1 match/mask	Page 287
INGR1_ETH1_VLAN_TAG2_I_TAG	0x00000018	1	Match/mask for VLAN tag 2 or I-tag match	Page 287

4.12.2.1 ETHERNET_COMPARATOR:INGR1_ETH1_FLOW_CFG:INGR1_ETH1_FLOW_ENABLE

Parent: ETHERNET_COMPARATOR:INGR1_ETH1_FLOW_CFG

Instances: 1

Table 500 • **Fields in INGR1_ETH1_FLOW_ENABLE**

Field Name	Bit	Access	Description	Default
INGR1_ETH1_CHANNEL_MASK	9:8	R/W	Channel mask 0x0: Flow invalid 0x1: Flow valid for channel 0 0x2: Flow valid for channel 1 0x3: Flow valid for both channels	0x3
INGR1_ETH1_FLOW_ENABLE	0	R/W	Flow enable 0: Flow disabled 1: Flow enabled	0x0

4.12.2.2 ETHERNET_COMPARATOR:INGR1_ETH1_FLOW_CFG:INGR1_ETH1_MATCH_MODE

Parent: ETHERNET_COMPARATOR:INGR1_ETH1_FLOW_CFG

Instances: 1

Table 501 • **Fields in INGR1_ETH1_MATCH_MODE**

Field Name	Bit	Access	Description	Default
INGR1_ETH1_VLAN_TAG_MODE	13:12	R/W	VLAN tag mode configuration 0: VLAN range checking disabled 1: VLAN range checking on tag 1 2: VLAN range checking on tag 2 (not supported with PBB) 3: Reserved	0x0
INGR1_ETH1_VLAN_TAG2_TYPE	9	R/W	VLAN tag2 type This register is only used if ETH1_VLAN_VERIFY_ENA = 1 If PBB not enabled: 0: C tag (TPID of 0x8100) 1: S tag (match to CONF_VLAN_TPID) If PBB enabled: 0,1: I tag (use range registers)	0x1
INGR1_ETH1_VLAN_TAG1_TYPE	8	R/W	VLAN tag1 type This register is only used if ETH1_VLAN_VERIFY_ENA = 1 0: C tag (TPID of 0x8100) 1: S or B tag (match to CONF_VLAN_TPID)	0x0
INGR1_ETH1_VLAN_TAGS	7:6	R/W	VLAN tags This register is only used if ETH1_VLAN_VERIFY_ENA = 1 0: No VLAN tags (not valid for PBB) 1: 1 VLAN tag (for PBB this would be the I-tag) 2: 2 VLAN tags (for PBB expect a B-tag and an I-tag) 3: Reserved	0x0
INGR1_ETH1_VLAN_VERIFY_ENA	4	R/W	Verify VLAN tags 0: Parse for VLAN tags, do not check values. For PBB the I-tag is always checked. 1: Verify configured VLAN tag configuration.	0x0
INGR1_ETH1_ETHERTYPE_MODE	0	R/W	VLAN tag verification configuration When checking for presence of SNAP/LLC based upon ETH1_MATCH_MODE, this field indicates if SNAP and 3-byte LLC is expected to be present. 0: Only Ethernet type II supported, no SNAP/LLC 1: Ethernet type II and Ethernet type I with SNAP/LLC, determine if SNAP/LLC is present or not. Type I always assumes that SNAP/LLC is present.	0x0

4.12.2.3 ETHERNET_COMPARATOR:INGR1_ETH1_FLOW_CFG:INGR1_ETH1_ADDR_MATCH_1

Parent: ETHERNET_COMPARATOR:INGR1_ETH1_FLOW_CFG

Instances: 1

Table 502 • **Fields in INGR1_ETH1_ADDR_MATCH_1**

Field Name	Bit	Access	Description	Default
INGR1_ETH1_ADDR_MATCH_1	31:0	R/W	First 32 bits of the address match value	0x00000000

4.12.2.4 ETHERNET_COMPARATOR:INGR1_ETH1_FLOW_CFG:INGR1_ETH1_ADDR_MATCH_2

Parent: ETHERNET_COMPARATOR:INGR1_ETH1_FLOW_CFG

Instances: 1

Table 503 • **Fields in INGR1_ETH1_ADDR_MATCH_2**

Field Name	Bit	Access	Description	Default
INGR1_ETH1_ADDR_MATCH_MODE	22:20	R/W	Selects how the addresses are matched. One-hot encoded. Multiple bits can be set at once. 0: Full 48-bit address match 1: Match any unicast address 2: Match any muliticast address	0x1
INGR1_ETH1_ADDR_MATCH_SELECT	17:16	R/W	Selects which address to match 0: Match the destination address 1: Match the source address 2: Match either the source of destination address 3: Reserved	0x0
INGR1_ETH1_ADDR_MATCH_2	15:0	R/W	Last 16 bits of the Ethernet address match field	0x0000

4.12.2.5 ETHERNET_COMPARATOR:INGR1_ETH1_FLOW_CFG:INGR1_ETH1_VLAN_TAG_RANGE_I_TAG

Parent: ETHERNET_COMPARATOR:INGR1_ETH1_FLOW_CFG

Instances: 1

Table 504 • **Fields in INGR1_ETH1_VLAN_TAG_RANGE_I_TAG**

Field Name	Bit	Access	Description	Default
INGR1_ETH1_VLAN_TAG_RANGE_UPPER	27:16	R/W	If PBB mode is not enabled, then this register contains the upper range of the VLAN tag range match. If PBB mode is enabled, then this register contains the upper 12 bits of the I-tag.	0xFFF

Table 504 • **Fields in INGR1_ETH1_VLAN_TAG_RANGE_I_TAG *(continued)***

Field Name	Bit	Access	Description	Default
INGR1_ETH1_VLAN_TAG_RANGE_LOWER	11:0	R/W	If PBB mode is not enabled, then this register contains the lower range of the VLAN tag range match. If PBB mode is enabled, then this register contains the lower 12 bits of the I-tag.	0x000

4.12.2.6 ETHERNET_COMPARATOR:INGR1_ETH1_FLOW_CFG:INGR1_ETH1_VLAN_TAG1

Parent: ETHERNET_COMPARATOR:INGR1_ETH1_FLOW_CFG

Instances: 1

Table 505 • **Fields in INGR1_ETH1_VLAN_TAG1**

Field Name	Bit	Access	Description	Default
INGR1_ETH1_VLAN_TAG1_MASK	27:16	R/W	Mask value for VLAN tag 1	0xFFF
INGR1_ETH1_VLAN_TAG1_MATCH	11:0	R/W	Match value for the first VLAN tag	0x000

4.12.2.7 ETHERNET_COMPARATOR:INGR1_ETH1_FLOW_CFG:INGR1_ETH1_VLAN_TAG2_I_TAG

Parent: ETHERNET_COMPARATOR:INGR1_ETH1_FLOW_CFG

Instances: 1

Table 506 • **Fields in INGR1_ETH1_VLAN_TAG2_I_TAG**

Field Name	Bit	Access	Description	Default
INGR1_ETH1_VLAN_TAG2_MASK	27:16	R/W	When PBB is not enabled, the mask field for VLAN tag 2. When PBB is enabled, the upper 12 bits of the I-tag mask.	0xFFF
INGR1_ETH1_VLAN_TAG2_MATCH	11:0	R/W	When PBB is not enabled, the match field for VLAN Tag 2. When PBB is enabled, the lower 12 bits of the I-tag mask field.	0x000

4.12.3 ETHERNET_COMPARATOR:INGR1_ETH2_NXT_PROTOCOL

Parent: Egress0 Ethernet Comparator

Instances: 1

Table 507 • **Registers in INGR1_ETH2_NXT_PROTOCOL**

Register Name	Offset within Register Group	Instances and Address Spacing	Description	Details
INGR1_ETH2_NXT_PROTOCOL	0x00000000	1	Ethernet next protocol register	Page 288
INGR1_ETH2_VLAN_TPID_CFG	0x00000004	1	VLAN TPID configuration	Page 288
INGR1_ETH2_ETYPE_MATCH	0x00000008	1	Ethertype match register	Page 288

4.12.3.1 ETHERNET_COMPARATOR:INGR1_ETH2_NXT_PROTOCOL:INGR1_ETH2_NXT_PROTOCOL

Parent: ETHERNET_COMPARATOR:INGR1_ETH2_NXT_PROTOCOL

Instances: 1

Table 508 • **Fields in INGR1_ETH2_NXT_PROTOCOL**

Field Name	Bit	Access	Description	Default
INGR1_ETH2_FRAME_SIG_OFFSET	20:16	R/W	Frame signature offset. Points to the start of the byte field in the Ethernet frame that will be used for the frame signature.	0x00
INGR1_ETH2_NXT_COMPARATOR	2:0	R/W	Points to the next comparator block after this Ethernet block. If this comparator block is not used, this field must be set to 0. 0: Comparator block not used 1: Ethernet comparator 2 2: IP/UDP/ACH comparator 1 3: IP/UDP/ACH comparator 2 4: MPLS comparator 5: PTP/OAM comparator 6,7: Reserved	0x0

4.12.3.2 ETHERNET_COMPARATOR:INGR1_ETH2_NXT_PROTOCOL:INGR1_ETH2_VLAN_TPID_CFG

Parent: ETHERNET_COMPARATOR:INGR1_ETH2_NXT_PROTOCOL

Instances: 1

Table 509 • **Fields in INGR1_ETH2_VLAN_TPID_CFG**

Field Name	Bit	Access	Description	Default
INGR1_ETH2_VLAN_TPID_CFG	31:16	R/W	Configurable S-tag TPID	0x88A8

4.12.3.3 ETHERNET_COMPARATOR:INGR1_ETH2_NXT_PROTOCOL:INGR1_ETH2_ETYPE_MATCH

Parent: ETHERNET_COMPARATOR:INGR1_ETH2_NXT_PROTOCOL

Instances: 1

Table 510 • **Fields in INGR1_ETH2_ETYPE_MATCH**

Field Name	Bit	Access	Description	Default
INGR1_ETH2_ETYPE_MATCH	15:0	R/W	If the Ethertype/length field is an Ethertype, then this register is compared against the value. If the field is a length, the length value is not checked.	0x0000

4.12.4 ETHERNET_COMPARATOR:INGR1_ETH2_FLOW_CFG

Parent: Egress0 Ethernet Comparator

Instances: 8

Table 511 • **Registers in INGR1_ETH2_FLOW_CFG**

Register Name	Offset within Register Group	Instances and Address Spacing	Description	Details
INGR1_ETH2_FLOW_ENABLE	0x00000000	1	Ethernet flow enable	Page 289
INGR1_ETH2_MATCH_MODE	0x00000004	1	Ethernet protocol match mode	Page 290
INGR1_ETH2_ADDR_MATCH_1	0x00000008	1	Ethernet address match part 1	Page 290
INGR1_ETH2_ADDR_MATCH_2	0x0000000C	1	Ethernet address match part 2	Page 291
INGR1_ETH2_VLAN_TAG_RANGE_I_TAG	0x00000010	1	Ethernet VLAN tag range match register	Page 291
INGR1_ETH2_VLAN_TAG1	0x00000014	1	VLAN tag 1 match/mask	Page 291
INGR1_ETH2_VLAN_TAG2_I_TAG	0x00000018	1	Match/mask for VLAN tag 2 or I-tag match	Page 292

4.12.4.1 ETHERNET_COMPARATOR:INGR1_ETH2_FLOW_CFG:INGR1_ETH2_FLOW_ENABLE

Parent: ETHERNET_COMPARATOR:INGR1_ETH2_FLOW_CFG

Instances: 1

Table 512 • **Fields in INGR1_ETH2_FLOW_ENABLE**

Field Name	Bit	Access	Description	Default
INGR1_ETH2_CHANNEL_MASK	9:8	R/W	Channel mask 0x0: Flow invalid 0x1: Flow valid for channel 0 0x2: Flow valid for channel 1 0x3: Flow valid for both channels	0x3
INGR1_ETH2_FLOW_ENABLE	0	R/W	Flow enable. If this comparator block is not used, all flow enable bits must be set to 0. 0: Flow disabled 1: Flow enabled	0x0

4.12.4.2 ETHERNET_COMPARATOR:INGR1_ETH2_FLOW_CFG:INGR1_ETH2_MATCH_MODE

Parent: ETHERNET_COMPARATOR:INGR1_ETH2_FLOW_CFG

Instances: 1

Table 513 • **Fields in INGR1_ETH2_MATCH_MODE**

Field Name	Bit	Access	Description	Default
INGR1_ETH2_VLAN_TAG_MODE	13:12	R/W	VLAN tag mode configuration 0: VLAN range checking disabled 1: VLAN range checking on tag 1 2: VLAN range checking on tag 2 (not supported with PBB) 3: Reserved	0x0
INGR1_ETH2_VLAN_TAG2_TYPE	9	R/W	VLAN tag2 type This register is only used if ETH1_VLAN_VERIFY_ENA = 1 0: C tag (TPID of 0x8100) 1: S tag (match to CONF_VLAN_TPID)	0x1
INGR1_ETH2_VLAN_TAG1_TYPE	8	R/W	VLAN tag1 type This register is only used if ETH1_VLAN_VERIFY_ENA = 1 0: C tag (TPID of 0x8100) 1: S or B tag (match to CONF_VLAN_TPID)	0x0
INGR1_ETH2_VLAN_TAGS	7:6	R/W	VLAN tags This register is only used if ETH2_VLAN_VERIFY_ENA = 1 0: No VLAN tags 1: 1 VLAN tag 2: 2 VLAN tags 3: Reserved	0x0
INGR1_ETH2_VLAN_VERIFY_ENA	4	R/W	Verify VLAN tags 0: Parse for VLAN tags, do not check values. 1: Verify configured VLAN tag configuration.	0x0
INGR1_ETH2_ETHERTYPE_MODE	0	R/W	VLAN tag verification configuration When checking for presence of SNAP/LLC based upon ETH1_MATCH_MODE, this field indicates if SNAP and 3-byte LLC is expected to be present. 0: Only Ethernet type II supported, no SNAP/LLC 1: Ethernet type II and Ethernet type I with SNAP/LLC, determine if SNAP/LLC is present or not. Type I always assumes that SNAP/LLC is present.	0x0

4.12.4.3 ETHERNET_COMPARATOR:INGR1_ETH2_FLOW_CFG:INGR1_ETH2_ADDR_MATCH_1

Parent: ETHERNET_COMPARATOR:INGR1_ETH2_FLOW_CFG

Instances: 1

Table 514 • **Fields in INGR1_ETH2_ADDR_MATCH_1**

Field Name	Bit	Access	Description	Default
INGR1_ETH2_ADDR_MATCH_1	31:0	R/W	First 32 bits of the address match value	0x00000000

4.12.4.4 ETHERNET_COMPARATOR:INGR1_ETH2_FLOW_CFG:INGR1_ETH2_ADDR_MATCH_2

Parent: ETHERNET_COMPARATOR:INGR1_ETH2_FLOW_CFG

Instances: 1

Table 515 • **Fields in INGR1_ETH2_ADDR_MATCH_2**

Field Name	Bit	Access	Description	Default
INGR1_ETH2_ADDR_MATCH_MODE	22:20	R/W	Selects how the addresses are matched. One-hot encoded. Multiple bits can be set at once. 0: Full 48-bit address match 1: Match any unicast address 2: Match any mulitcast address	0x1
INGR1_ETH2_ADDR_MATCH_SELECT	17:16	R/W	Selects which address to match 0: Match the destination address 1: Match the source address 2: Match either the source of destination address 3: Reserved	0x0
INGR1_ETH2_ADDR_MATCH_2	15:0	R/W	Last 16 bits of the Ethernet address match field	0x0000

4.12.4.5 ETHERNET_COMPARATOR:INGR1_ETH2_FLOW_CFG:INGR1_ETH2_VLAN_TAG_RANGE_I_TAG

Parent: ETHERNET_COMPARATOR:INGR1_ETH2_FLOW_CFG

Instances: 1

Table 516 • **Fields in INGR1_ETH2_VLAN_TAG_RANGE_I_TAG**

Field Name	Bit	Access	Description	Default
INGR1_ETH2_VLAN_TAG_RANGE_UPPER	27:16	R/W	Contains the upper range of the VLAN tag range match	0xFFF
INGR1_ETH2_VLAN_TAG_RANGE_LOWER	11:0	R/W	Contains the lower range of the VLAN tag range match	0x000

4.12.4.6 ETHERNET_COMPARATOR:INGR1_ETH2_FLOW_CFG:INGR1_ETH2_VLAN_TAG1

Parent: ETHERNET_COMPARATOR:INGR1_ETH2_FLOW_CFG

Instances: 1

Table 517 • **Fields in INGR1_ETH2_VLAN_TAG1**

Field Name	Bit	Access	Description	Default
INGR1_ETH2_VLAN_TAG1_MASK	27:16	R/W	Mask value for VLAN tag 1	0xFFF
INGR1_ETH2_VLAN_TAG1_MATCH	11:0	R/W	Match value for the first VLAN tag	0x000

4.12.4.7 ETHERNET_COMPARATOR:INGR1_ETH2_FLOW_CFG:INGR1_ETH2_VLAN_TAG2_I_TAG

Parent: ETHERNET_COMPARATOR:INGR1_ETH2_FLOW_CFG

Instances: 1

Table 518 • **Fields in INGR1_ETH2_VLAN_TAG2_I_TAG**

Field Name	Bit	Access	Description	Default
INGR1_ETH2_VLAN_TAG2_MASK	27:16	R/W	Mask field for VLAN tag 2	0xFFF
INGR1_ETH2_VLAN_TAG2_MATCH	11:0	R/W	Match field for VLAN Tag 2	0x000

4.12.5 ETHERNET_COMPARATOR:INGR1_MPLS_NXT_COMPARATOR

Parent: Egress0 Ethernet Comparator

Instances: 1

Table 519 • **Registers in INGR1_MPLS_NXT_COMPARATOR**

Register Name	Offset within Register Group	Instances and Address Spacing	Description	Details
INGR1_MPLS_NXT_COMPARATOR	0x00000000	1	MPLS next protocol comparator register	Page 292

4.12.5.1 ETHERNET_COMPARATOR:INGR1_MPLS_NXT_COMPARATOR:INGR1_MPLS_NXT_COMPARATOR

Parent: ETHERNET_COMPARATOR:INGR1_MPLS_NXT_COMPARATOR

Instances: 1

Table 520 • **Fields in INGR1_MPLS_NXT_COMPARATOR**

Field Name	Bit	Access	Description	Default
INGR1_MPLS_CTL_WORD	16	R/W	Indicates the presence of a control word after the last label. The first 4 bits of the control word are always 0. 0: No control word after the last label 1: Control word after the last label	0x0
INGR1_MPLS_NXT_COMPARATOR	2:0	R/W	Points to the next comparator stage. If this comparator block is not used, this field must be set to 0. 0: Comparator block not used. 1: Ethernet comparator 2 2: IP/UDP/ACH comparator 1 3: IP/UDP/ACH comparator 2 4: Reserved 5: PTP/OAM comparator 6,7: Reserved	0x0

4.12.6 ETHERNET_COMPARATOR:INGR1_MPLS_FLOW_CFG

Parent: Egress0 Ethernet Comparator

Instances: 8

Table 521 • **Registers in INGR1_MPLS_FLOW_CFG**

Register Name	Offset within Register Group	Instances and Address Spacing	Description	Details
INGR1_MPLS_FLOW_CONTROL	0x00000000	1	MPLS flow control register	Page 294
INGR1_MPLS_LABEL_RANGE_LOWER_0	0x00000008	1	MPLS label 0 match range lower value	Page 294
INGR1_MPLS_LABEL_RANGE_UPPER_0	0x0000000C	1	MPLS label 0 match range upper value	Page 294
INGR1_MPLS_LABEL_RANGE_LOWER_1	0x00000010	1	MPLS label 1 match range lower value	Page 295
INGR1_MPLS_LABEL_RANGE_UPPER_1	0x00000014	1	MPLS label 1 match range upper value	Page 295
INGR1_MPLS_LABEL_RANGE_LOWER_2	0x00000018	1	MPLS label 2 match range lower value	Page 295
INGR1_MPLS_LABEL_RANGE_UPPER_2	0x0000001C	1	MPLS label 2 match range upper value	Page 295
INGR1_MPLS_LABEL_RANGE_LOWER_3	0x00000020	1	MPLS label 3 match range lower value	Page 296
INGR1_MPLS_LABEL_RANGE_UPPER_3	0x00000024	1	MPLS label 3 match range upper value	Page 296

4.12.6.1 ETHERNET_COMPARATOR:INGR1_MPLS_FLOW_CFG:INGR1_MPLS_FLOW_CONTROL

Parent: ETHERNET_COMPARATOR:INGR1_MPLS_FLOW_CFG

Instances: 1

Table 522 • **Fields in INGR1_MPLS_FLOW_CONTROL**

Field Name	Bit	Access	Description	Default
INGR1_MPLS_CHANNEL_MASK	25:24	R/W	MPLS channel mask selector 0x0: Flow invalid 0x1: Flow valid for channel 0 0x2: Flow valid for channel 1 0x3: Flow valid for both channels	0x3
INGR1_MPLS_STACK_DEPTH	19:16	R/W	Stack depth configuration Defines the allowable stack depths for searches. The direction that the stack is referenced is determined by the setting of MPLS_REF_PNT. For each bit set, the following table maps bits to stack depths: 0: Stack allowed to be 1 label deep 1: Stack allowed to be 2 labels deep 2: Stack allowed to be 3 labels deep 3: Stack allowed to be 4 labels deep	0x0
INGR1_MPLS_REF_PNT	4	R/W	Search direction for label matching 0: All searching is performed starting from the top of the stack 1: All searching is performed from the end of the stack	0x0
INGR1_MPLS_FLOW_ENA	0	R/W	Flow enable. If this comparator block is not used, all flow enable bits must be set to 0. 0: Flow is disabled 1: Flow is enabled	0x0

4.12.6.2 ETHERNET_COMPARATOR:INGR1_MPLS_FLOW_CFG:INGR1_MPLS_LABEL_RANGE_LOWER_0

Parent: ETHERNET_COMPARATOR:INGR1_MPLS_FLOW_CFG

Instances: 1

Table 523 • **Fields in INGR1_MPLS_LABEL_RANGE_LOWER_0**

Field Name	Bit	Access	Description	Default
INGR1_MPLS_LABEL_RANGE_LOWER_0	19:0	R/W	Lower value for label 0 match range	0x00000

4.12.6.3 ETHERNET_COMPARATOR:INGR1_MPLS_FLOW_CFG:INGR1_MPLS_LABEL_RANGE_UPPER_0

Parent: ETHERNET_COMPARATOR:INGR1_MPLS_FLOW_CFG

Instances: 1

Table 524 • **Fields in INGR1_MPLS_LABEL_RANGE_UPPER_0**

Field Name	Bit	Access	Description	Default
INGR1_MPLS_LABEL_RANGE_UPPER_0	19:0	R/W	Upper value for label 0 match range	0xFFFFF

4.12.6.4 ETHERNET_COMPARATOR:INGR1_MPLS_FLOW_CFG:INGR1_MPLS_LABEL_RANGE_LOWER_1

Parent: ETHERNET_COMPARATOR:INGR1_MPLS_FLOW_CFG

Instances: 1

Table 525 • **Fields in INGR1_MPLS_LABEL_RANGE_LOWER_1**

Field Name	Bit	Access	Description	Default
INGR1_MPLS_LABEL_RANGE_LOWER_1	19:0	R/W	Lower value for label 1 match range	0x00000

4.12.6.5 ETHERNET_COMPARATOR:INGR1_MPLS_FLOW_CFG:INGR1_MPLS_LABEL_RANGE_UPPER_1

Parent: ETHERNET_COMPARATOR:INGR1_MPLS_FLOW_CFG

Instances: 1

Table 526 • **Fields in INGR1_MPLS_LABEL_RANGE_UPPER_1**

Field Name	Bit	Access	Description	Default
INGR1_MPLS_LABEL_RANGE_UPPER_1	19:0	R/W	Upper value for label 1 match range	0xFFFFF

4.12.6.6 ETHERNET_COMPARATOR:INGR1_MPLS_FLOW_CFG:INGR1_MPLS_LABEL_RANGE_LOWER_2

Parent: ETHERNET_COMPARATOR:INGR1_MPLS_FLOW_CFG

Instances: 1

Table 527 • **Fields in INGR1_MPLS_LABEL_RANGE_LOWER_2**

Field Name	Bit	Access	Description	Default
INGR1_MPLS_LABEL_RANGE_LOWER_2	19:0	R/W	Lower value for label 2 match range	0x00000

4.12.6.7 ETHERNET_COMPARATOR:INGR1_MPLS_FLOW_CFG:INGR1_MPLS_LABEL_RANGE_UPPER_2

Parent: ETHERNET_COMPARATOR:INGR1_MPLS_FLOW_CFG

Instances: 1

Table 528 • **Fields in INGR1_MPLS_LABEL_RANGE_UPPER_2**

Field Name	Bit	Access	Description	Default
INGR1_MPLS_LABEL_RANGE_UPPER_2	19:0	R/W	Upper value for label 2 match range	0xFFFFF

4.12.6.8 ETHERNET_COMPARATOR:INGR1_MPLS_FLOW_CFG:INGR1_MPLS_LABEL_RANGE_LOWER_3

Parent: ETHERNET_COMPARATOR:INGR1_MPLS_FLOW_CFG

Instances: 1

Table 529 • **Fields in INGR1_MPLS_LABEL_RANGE_LOWER_3**

Field Name	Bit	Access	Description	Default
INGR1_MPLS_LABEL_RANGE_LOWER_3	19:0	R/W	Lower value for label 3 match range	0x00000

4.12.6.9 ETHERNET_COMPARATOR:INGR1_MPLS_FLOW_CFG:INGR1_MPLS_LABEL_RANGE_UPPER_3

Parent: ETHERNET_COMPARATOR:INGR1_MPLS_FLOW_CFG

Instances: 1

Table 530 • **Fields in INGR1_MPLS_LABEL_RANGE_UPPER_3**

Field Name	Bit	Access	Description	Default
INGR1_MPLS_LABEL_RANGE_UPPER_3	19:0	R/W	Upper value for label 3 match range	0xFFFFF

4.12.7 ETHERNET_COMPARATOR:INGR1_IP1_NXT_PROTOCOL

Parent: Egress0 Ethernet Comparator

Instances: 1

Table 531 • **Registers in INGR1_IP1_NXT_PROTOCOL**

Register Name	Offset within Register Group	Instances and Address Spacing	Description	Details
INGR1_IP1_NXT_COMPARATOR	0x00000000	1	IP next comparator control register	Page 297
INGR1_IP1_MODE	0x00000004	1	IP comparator mode	Page 297
INGR1_IP1_PROT_MATCH_1	0x00000008	1	IP match register set 1	Page 298
INGR1_IP1_PROT_MATCH_2_UPPER	0x0000000C	1	Upper portion of match register 2	Page 298

Table 531 • **Registers in INGR1_IP1_NXT_PROTOCOL *(continued)***

Register Name	Offset within Register Group	Instances and Address Spacing	Description	Details
INGR1_IP1_PROT_MATCH_2_LOWER	0x00000010	1	Lower portion of match register 2	Page 298
INGR1_IP1_PROT_MASK_2_UPPER	0x00000014	1	Upper portion of match mask register 2	Page 299
INGR1_IP1_PROT_MASK_2_LOWER	0x00000018	1	Lower portion of match mask register 2	Page 299
INGR1_IP1_PROT_OFFSET_2	0x0000001C	1	IP match offset register set 2	Page 299
INGR1_IP1_UDP_CHKSUM_CFG	0x00000020	1	IP/UDP checksum control register	Page 299

4.12.7.1 ETHERNET_COMPARATOR:INGR1_IP1_NXT_PROTOCOL:INGR1_IP1_NXT_COMPARATOR

Parent: ETHERNET_COMPARATOR:INGR1_IP1_NXT_PROTOCOL

Instances: 1

Table 532 • **Fields in INGR1_IP1_NXT_COMPARATOR**

Field Name	Bit	Access	Description	Default
INGR1_IP1_NXT_PROTOCOL	15:8	R/W	Number of bytes in this header, points to the beginning of the next protocol.	0x00
INGR1_IP1_NXT_COMPARATOR	2:0	R/W	Points to the next comparator stage. If this comparator block is not used, this field must be set to 0. 0: Comparator block not used 1: Reserved 2: Reserved 3: IP/UDP/ACH comparator 2 4: Reserved 5: PTP/OAM comparator 6,7: Reserved	0x0

4.12.7.2 ETHERNET_COMPARATOR:INGR1_IP1_NXT_PROTOCOL:INGR1_IP1_MODE

Parent: ETHERNET_COMPARATOR:INGR1_IP1_NXT_PROTOCOL

Instances: 1

Table 533 • **Fields in INGR1_IP1_MODE**

Field Name	Bit	Access	Description	Default
INGR1_IP1_FLOW_OFFSET	12:8	R/W	Points to the source address field in the IP frame. Use 12 for IPv4 and 8 for IPv6.	0x0C

Table 533 • **Fields in INGR1_IP1_MODE *(continued)***

Field Name	Bit	Access	Description	Default
INGR1_IP1_MODE	1:0	R/W	IP mode 0: IPv4 1: IPv6 2: Other protocol, 32-bit address match 3: Other protocol, 128-bit address match	0x0

4.12.7.3 ETHERNET_COMPARATOR:INGR1_IP1_NXT_PROTOCOL:INGR1_IP1_PROT_MATCH_1

Parent: ETHERNET_COMPARATOR:INGR1_IP1_NXT_PROTOCOL

Instances: 1

Table 534 • **Fields in INGR1_IP1_PROT_MATCH_1**

Field Name	Bit	Access	Description	Default
INGR1_IP1_PROT_OFFSET_1	20:16	R/W	Points to the start of this match field relative to the first byte of this protocol	0x00
INGR1_IP1_PROT_MASK_1	15:8	R/W	Mask field for IP_PROT_MATCH_1	0x00
INGR1_IP1_PROT_MATCH_1	7:0	R/W	8-bit match field	0x00

4.12.7.4 ETHERNET_COMPARATOR:INGR1_IP1_NXT_PROTOCOL:INGR1_IP1_PROT_MATCH_2_UPPER

Parent: ETHERNET_COMPARATOR:INGR1_IP1_NXT_PROTOCOL

Instances: 1

Table 535 • **Fields in INGR1_IP1_PROT_MATCH_2_UPPER**

Field Name	Bit	Access	Description	Default
INGR1_IP1_PROT_MATCH_2_UPPER	31:0	R/W	64-bit match register for advancing to the next protocol, upper portion	0x00000000

4.12.7.5 ETHERNET_COMPARATOR:INGR1_IP1_NXT_PROTOCOL:INGR1_IP1_PROT_MATCH_2_LOWER

Parent: ETHERNET_COMPARATOR:INGR1_IP1_NXT_PROTOCOL

Instances: 1

Table 536 • **Fields in INGR1_IP1_PROT_MATCH_2_LOWER**

Field Name	Bit	Access	Description	Default
INGR1_IP1_PROT_MATCH_2_LOWER	31:0	R/W	64-bit match register for advancing to the next protocol, lower portion	0x00000000

4.12.7.6 ETHERNET_COMPARATOR:INGR1_IP1_NXT_PROTOCOL:INGR1_IP1_PROT_MASK_2_UPPER

Parent: ETHERNET_COMPARATOR:INGR1_IP1_NXT_PROTOCOL

Instances: 1

Table 537 • **Fields in INGR1_IP1_PROT_MASK_2_UPPER**

Field Name	Bit	Access	Description	Default
INGR1_IP1_PROT_MASK_2_UPPER	31:0	R/W		0x00000000

4.12.7.7 ETHERNET_COMPARATOR:INGR1_IP1_NXT_PROTOCOL:INGR1_IP1_PROT_MASK_2_LOWER

Parent: ETHERNET_COMPARATOR:INGR1_IP1_NXT_PROTOCOL

Instances: 1

Table 538 • **Fields in INGR1_IP1_PROT_MASK_2_LOWER**

Field Name	Bit	Access	Description	Default
INGR1_IP1_PROT_MASK_2_LOWER	31:0	R/W		0x00000000

4.12.7.8 ETHERNET_COMPARATOR:INGR1_IP1_NXT_PROTOCOL:INGR1_IP1_PROT_OFFSET_2

Parent: ETHERNET_COMPARATOR:INGR1_IP1_NXT_PROTOCOL

Instances: 1

Table 539 • **Fields in INGR1_IP1_PROT_OFFSET_2**

Field Name	Bit	Access	Description	Default
INGR1_IP1_PROT_OFFSET_2	6:0	R/W	Points to the start of match field 2 relative to the first byte of this protocol	0x00

4.12.7.9 ETHERNET_COMPARATOR:INGR1_IP1_NXT_PROTOCOL:INGR1_IP1_UDP_CHKSUM_CFG

Parent: ETHERNET_COMPARATOR:INGR1_IP1_NXT_PROTOCOL

Instances: 1

Table 540 • **Fields in INGR1_IP1_UDP_CHKSUM_CFG**

Field Name	Bit	Access	Description	Default
INGR1_IP1_UDP_CHKSUM_OFFSET	15:8	R/W	Pointer to the IP/UDP checksum field FOR IPv4 frames or to the pad bytes of a IPv6/UDP frame. For IPv4, it points to the bytes that will be cleared. For IPv6, it points to the bytes that will be updated to fix the CRC.	0x00
INGR1_IP1_UDP_CHKSUM_WIDTH	5:4	R/W	Specifies the length of the checksum field in bytes	0x2
INGR1_IP1_UDP_CHKSUM_UPDATE_ENA	1	R/W	This bit and IP_UDP_CHKSUM_CLEAR_ENA CANNOT be set together 0: No pad byte field update 1: Update the pad bytes at the end of the frame	0x0
INGR1_IP1_UDP_CHKSUM_CLEAR_ENA	0	R/W	This bit and IP_UDP_CHKSUM_UPDATE_ENA CANNOT be set together 0: Do not clear the checksum 1: Clear the UDP checksum field in an IPv4 frame	0x0

4.12.8 ETHERNET_COMPARATOR:INGR1_IP1_FLOW_CFG

Parent: Egress0 Ethernet Comparator

Instances: 8

Table 541 • **Registers in INGR1_IP1_FLOW_CFG**

Register Name	Offset within Register Group	Instances and Address Spacing	Description	Details
INGR1_IP1_FLOW_ENA	0x00000000	1	IP flow enable register	Page 301
INGR1_IP1_FLOW_MATCH_UPPER	0x00000004	1	Upper portion of the IP flow match register	Page 301
INGR1_IP1_FLOW_MATCH_UPPER_MID	0x00000008	1	Upper mid portion of the IP flow match register	Page 301
INGR1_IP1_FLOW_MATCH_LOWER_MID	0x0000000C	1	Lower mid portion of the IP flow match register	Page 302
INGR1_IP1_FLOW_MATCH_LOWER	0x00000010	1	Lower portion of the IP flow match register	Page 302
INGR1_IP1_FLOW_MASK_UPPER	0x00000014	1	Upper portion of the IP flow match mask register	Page 302
INGR1_IP1_FLOW_MASK_UPPER_MID	0x00000018	1	Upper mid portion of the IP flow match mask register	Page 302
INGR1_IP1_FLOW_MASK_LOWER_MID	0x0000001C	1	Lower mid portion of the IP flow match mask register	Page 303

Table 541 • **Registers in INGR1_IP1_FLOW_CFG *(continued)***

Register Name	Offset within Register Group	Instances and Address Spacing	Description	Details
INGR1_IP1_FLOW_MASK_LOWER	0x00000020	1	Lower portion of the IP flow match mask register	Page 303

4.12.8.1 ETHERNET_COMPARATOR:INGR1_IP1_FLOW_CFG:INGR1_IP1_FLOW_ENA

Parent: ETHERNET_COMPARATOR:INGR1_IP1_FLOW_CFG

Instances: 1

Table 542 • **Fields in INGR1_IP1_FLOW_ENA**

Field Name	Bit	Access	Description	Default
INGR1_IP1_FLOW_MATCH_MODE	9:8	R/W	Match mode 0: Match on source address 1: Match on destination address 2: Match on either source or destination address 3: Reserved	0x0
INGR1_IP1_CHANNEL_MASK	5:4	R/W	Channel mask 0x0: Flow invalid 0x1: Flow valid for channel 0 0x2: Flow valid for channel 1 0x3: Flow valid for both channels	0x3
INGR1_IP1_FLOW_ENA	0	R/W	Flow enable. If this comparator block is not used, all flow enable bits must be set to 0. 0: Flow disabled 1: Flow enabled	0x0

4.12.8.2 ETHERNET_COMPARATOR:INGR1_IP1_FLOW_CFG:INGR1_IP1_FLOW_MATCH_UPPER

Parent: ETHERNET_COMPARATOR:INGR1_IP1_FLOW_CFG

Instances: 1

Table 543 • **Fields in INGR1_IP1_FLOW_MATCH_UPPER**

Field Name	Bit	Access	Description	Default
INGR1_IP1_FLOW_MATCH_UPPER	31:0	R/W	Match field for either the entire 32-bit selected address for IPv4 or the upper 32 bits of the selected address for IPv6	0x00000000

4.12.8.3 ETHERNET_COMPARATOR:INGR1_IP1_FLOW_CFG:INGR1_IP1_FLOW_MATCH_UPPER_MID

Parent: ETHERNET_COMPARATOR:INGR1_IP1_FLOW_CFG

Instances: 1

Table 544 • **Fields in INGR1_IP1_FLOW_MATCH_UPPER_MID**

Field Name	Bit	Access	Description	Default
INGR1_IP1_FLOW_MATCH_UPPER_MID	31:0	R/W	Match bits for the upper middle 32 bits of the IPv6 address	0x00000000

4.12.8.4 ETHERNET_COMPARATOR:INGR1_IP1_FLOW_CFG:INGR1_IP1_FLOW_MATCH_LOWER_MID

Parent: ETHERNET_COMPARATOR:INGR1_IP1_FLOW_CFG

Instances: 1

Table 545 • **Fields in INGR1_IP1_FLOW_MATCH_LOWER_MID**

Field Name	Bit	Access	Description	Default
INGR1_IP1_FLOW_MATCH_LOWER_MID	31:0	R/W	Match bits for the lower middle 32 bits of the IPv6 address	0x00000000

4.12.8.5 ETHERNET_COMPARATOR:INGR1_IP1_FLOW_CFG:INGR1_IP1_FLOW_MATCH_LOWER

Parent: ETHERNET_COMPARATOR:INGR1_IP1_FLOW_CFG

Instances: 1

Table 546 • **Fields in INGR1_IP1_FLOW_MATCH_LOWER**

Field Name	Bit	Access	Description	Default
INGR1_IP1_FLOW_MATCH_LOWER	31:0	R/W	Match bits for the lower 32 bits of the IPv6 address	0x00000000

4.12.8.6 ETHERNET_COMPARATOR:INGR1_IP1_FLOW_CFG:INGR1_IP1_FLOW_MASK_UPPER

Parent: ETHERNET_COMPARATOR:INGR1_IP1_FLOW_CFG

Instances: 1

Table 547 • **Fields in INGR1_IP1_FLOW_MASK_UPPER**

Field Name	Bit	Access	Description	Default
INGR1_IP1_FLOW_MASK_UPPER	31:0	R/W	Address mask for the IP address	0x00000000

4.12.8.7 ETHERNET_COMPARATOR:INGR1_IP1_FLOW_CFG:INGR1_IP1_FLOW_MASK_UPPER_MID

Parent: ETHERNET_COMPARATOR:INGR1_IP1_FLOW_CFG

Instances: 1

Table 548 • **Fields in INGR1_IP1_FLOW_MASK_UPPER_MID**

Field Name	Bit	Access	Description	Default
INGR1_IP1_FLOW_MASK_UPPER_MID	31:0	R/W	These bits must be all 0 for IPv4 and any 32-bit address match mode	0x00000000

4.12.8.8 ETHERNET_COMPARATOR:INGR1_IP1_FLOW_CFG:INGR1_IP1_FLOW_MASK_LOWER_MID

Parent: ETHERNET_COMPARATOR:INGR1_IP1_FLOW_CFG

Instances: 1

Table 549 • **Fields in INGR1_IP1_FLOW_MASK_LOWER_MID**

Field Name	Bit	Access	Description	Default
INGR1_IP1_FLOW_MASK_LOWER_MID	31:0	R/W	These bits must be all 0 for IPv4 and any 32-bit address match mode	0x00000000

4.12.8.9 ETHERNET_COMPARATOR:INGR1_IP1_FLOW_CFG:INGR1_IP1_FLOW_MASK_LOWER

Parent: ETHERNET_COMPARATOR:INGR1_IP1_FLOW_CFG

Instances: 1

Table 550 • **Fields in INGR1_IP1_FLOW_MASK_LOWER**

Field Name	Bit	Access	Description	Default
INGR1_IP1_FLOW_MASK_LOWER	31:0	R/W	These bits must be all 0 for IPv4 and any 32-bit address match mode	0x00000000

4.12.9 ETHERNET_COMPARATOR:INGR1_IP2_NXT_PROTOCOL

Parent: Egress0 Ethernet Comparator

Instances: 1

Table 551 • **Registers in INGR1_IP2_NXT_PROTOCOL**

Register Name	Offset within Register Group	Instances and Address Spacing	Description	Details
INGR1_IP2_NXT_COMPARATOR	0x00000000	1	IP next comparator control register	Page 304
INGR1_IP2_MODE	0x00000004	1	IP comparator mode	Page 304
INGR1_IP2_PROT_MATCH_1	0x00000008	1	IP match register set 1	Page 305
INGR1_IP2_PROT_MATCH_2_UPPER	0x0000000C	1	Upper portion of match register 2	Page 305

Table 551 • **Registers in INGR1_IP2_NXT_PROTOCOL *(continued)***

Register Name	Offset within Register Group	Instances and Address Spacing	Description	Details
INGR1_IP2_PROT_MATCH_2_LOWER	0x00000010	1	Lower portion of match register 2	Page 305
INGR1_IP2_PROT_MASK_2_UPPER	0x00000014	1	Upper portion of match mask register 2	Page 306
INGR1_IP2_PROT_MASK_2_LOWER	0x00000018	1	Lower portion of match mask register 2	Page 306
INGR1_IP2_PROT_OFFSET_2	0x0000001C	1	IP match offset register set 2	Page 306
INGR1_IP2_UDP_CHKSUM_CFG	0x00000020	1	IP/UDP checksum control register	Page 306

4.12.9.1 ETHERNET_COMPARATOR:INGR1_IP2_NXT_PROTOCOL:INGR1_IP2_NXT_COMPARATOR

Parent: ETHERNET_COMPARATOR:INGR1_IP2_NXT_PROTOCOL

Instances: 1

Table 552 • **Fields in INGR1_IP2_NXT_COMPARATOR**

Field Name	Bit	Access	Description	Default
INGR1_IP2_NXT_PROTOCOL	15:8	R/W	Number of bytes in this header, points to the beginning of the next protocol.	0x00
INGR1_IP2_NXT_COMPARATOR	2:0	R/W	Points to the next comparator stage. If this comparator block is not used, this field must be set to 0. 0: Comparator block not used 1: Reserved 2: Reserved 3: Reserved 4: Reserved 5: PTP/OAM comparator 6,7: Reserved	0x0

4.12.9.2 ETHERNET_COMPARATOR:INGR1_IP2_NXT_PROTOCOL:INGR1_IP2_MODE

Parent: ETHERNET_COMPARATOR:INGR1_IP2_NXT_PROTOCOL

Instances: 1

Table 553 • **Fields in INGR1_IP2_MODE**

Field Name	Bit	Access	Description	Default
INGR1_IP2_FLOW_OFFSET	12:8	R/W	Points to the source address field in the IP frame. Use 12 for IPv4 and 8 for IPv6.	0x0C

Table 553 • **Fields in INGR1_IP2_MODE *(continued)***

Field Name	Bit	Access	Description	Default
INGR1_IP2_MODE	1:0	R/W	IP mode 0: IPv4 1: IPv6 2: Other protocol, 32-bit address match 3: Other protocol, 128-bit address match	0x0

4.12.9.3 ETHERNET_COMPARATOR:INGR1_IP2_NXT_PROTOCOL:INGR1_IP2_PROT_MATCH_1

Parent: ETHERNET_COMPARATOR:INGR1_IP2_NXT_PROTOCOL

Instances: 1

Table 554 • **Fields in INGR1_IP2_PROT_MATCH_1**

Field Name	Bit	Access	Description	Default
INGR1_IP2_PROT_OFFSET_1	20:16	R/W	Points to the start of this match field relative to the first byte of this protocol	0x00
INGR1_IP2_PROT_MASK_1	15:8	R/W	Mask field for IP_PROT_MATCH_1	0x00
INGR1_IP2_PROT_MATCH_1	7:0	R/W	8-bit match field	0x00

4.12.9.4 ETHERNET_COMPARATOR:INGR1_IP2_NXT_PROTOCOL:INGR1_IP2_PROT_MATCH_2_UPPER

Parent: ETHERNET_COMPARATOR:INGR1_IP2_NXT_PROTOCOL

Instances: 1

Table 555 • **Fields in INGR1_IP2_PROT_MATCH_2_UPPER**

Field Name	Bit	Access	Description	Default
INGR1_IP2_PROT_MATCH_2_UPPER	31:0	R/W	64-bit match register for advancing to the next protocol, upper portion	0x00000000

4.12.9.5 ETHERNET_COMPARATOR:INGR1_IP2_NXT_PROTOCOL:INGR1_IP2_PROT_MATCH_2_LOWER

Parent: ETHERNET_COMPARATOR:INGR1_IP2_NXT_PROTOCOL

Instances: 1

Table 556 • **Fields in INGR1_IP2_PROT_MATCH_2_LOWER**

Field Name	Bit	Access	Description	Default
INGR1_IP2_PROT_MATCH_2_LOWER	31:0	R/W	64-bit match register for advancing to the next protocol, lower portion	0x00000000

4.12.9.6 ETHERNET_COMPARATOR:INGR1_IP2_NXT_PROTOCOL:INGR1_IP2_PROT_MASK_2_UPPER

Parent: ETHERNET_COMPARATOR:INGR1_IP2_NXT_PROTOCOL

Instances: 1

Table 557 • **Fields in INGR1_IP2_PROT_MASK_2_UPPER**

Field Name	Bit	Access	Description	Default
INGR1_IP2_PROT_MASK_2_UPPER	31:0	R/W		0x00000000

4.12.9.7 ETHERNET_COMPARATOR:INGR1_IP2_NXT_PROTOCOL:INGR1_IP2_PROT_MASK_2_LOWER

Parent: ETHERNET_COMPARATOR:INGR1_IP2_NXT_PROTOCOL

Instances: 1

Table 558 • **Fields in INGR1_IP2_PROT_MASK_2_LOWER**

Field Name	Bit	Access	Description	Default
INGR1_IP2_PROT_MASK_2_LOWER	31:0	R/W		0x00000000

4.12.9.8 ETHERNET_COMPARATOR:INGR1_IP2_NXT_PROTOCOL:INGR1_IP2_PROT_OFFSET_2

Parent: ETHERNET_COMPARATOR:INGR1_IP2_NXT_PROTOCOL

Instances: 1

Table 559 • **Fields in INGR1_IP2_PROT_OFFSET_2**

Field Name	Bit	Access	Description	Default
INGR1_IP2_PROT_OFFSET_2	6:0	R/W	Points to the start of match field 2 relative to the first byte of this protocol	0x00

4.12.9.9 ETHERNET_COMPARATOR:INGR1_IP2_NXT_PROTOCOL:INGR1_IP2_UDP_CHKSUM_CFG

Parent: ETHERNET_COMPARATOR:INGR1_IP2_NXT_PROTOCOL

Instances: 1

Table 560 • **Fields in INGR1_IP2_UDP_CHKSUM_CFG**

Field Name	Bit	Access	Description	Default
INGR1_IP2_UDP_CHKSUM_OFFSET	15:8	R/W	Pointer to the IP/UDP checksum field FOR IPv4 frames or to the pad bytes of a IPv6/UDP frame. For IPv4, it points to the bytes that will be cleared. For IPv6, it points to the bytes that will be updated to fix the CRC.	0x00
INGR1_IP2_UDP_CHKSUM_WIDTH	5:4	R/W	Specifies the length of the checksum field in bytes	0x2
INGR1_IP2_UDP_CHKSUM_UPDATE_ENA	1	R/W	This bit and IP_UDP_CHKSUM_CLEAR_ENA CANNOT be set together 1: Update the pad bytes at the end of the frame 0: No pad byte field update	0x0
INGR1_IP2_UDP_CHKSUM_CLEAR_ENA	0	R/W	This bit and IP_UDP_CHKSUM_UPDATE_ENA CANNOT be set together 1: Clear the UDP checksum field in an IPv4 frame 0: Do not clear the checksum	0x0

4.12.10 ETHERNET_COMPARATOR:INGR1_IP2_FLOW_CFG

Parent: Egress0 Ethernet Comparator

Instances: 8

Table 561 • **Registers in INGR1_IP2_FLOW_CFG**

Register Name	Offset within Register Group	Instances and Address Spacing	Description	Details
INGR1_IP2_FLOW_ENA	0x00000000	1	IP flow enable register	Page 308
INGR1_IP2_FLOW_MATCH_UPPER	0x00000004	1	Upper portion of the IP flow match register	Page 308
INGR1_IP2_FLOW_MATCH_UPPER_MID	0x00000008	1	Upper mid portion of the IP flow match register	Page 308
INGR1_IP2_FLOW_MATCH_LOWER_MID	0x0000000C	1	Lower mid portion of the IP flow match register	Page 309
INGR1_IP2_FLOW_MATCH_LOWER	0x00000010	1	Lower portion of the IP flow match register	Page 309
INGR1_IP2_FLOW_MASK_UPPER	0x00000014	1	Upper portion of the IP flow match mask register	Page 309
INGR1_IP2_FLOW_MASK_UPPER_MID	0x00000018	1	Upper mid portion of the IP flow match mask register	Page 310
INGR1_IP2_FLOW_MASK_LOWER_MID	0x0000001C	1	Lower mid portion of the IP flow match mask register	Page 310

Table 561 • **Registers in INGR1_IP2_FLOW_CFG *(continued)***

Register Name	Offset within Register Group	Instances and Address Spacing	Description	Details
INGR1_IP2_FLOW_MASK_LOWER	0x00000020	1	Lower portion of the IP flow match mask register	Page 310

4.12.10.1 ETHERNET_COMPARATOR:INGR1_IP2_FLOW_CFG:INGR1_IP2_FLOW_ENA

Parent: ETHERNET_COMPARATOR:INGR1_IP2_FLOW_CFG

Instances: 1

Table 562 • **Fields in INGR1_IP2_FLOW_ENA**

Field Name	Bit	Access	Description	Default
INGR1_IP2_FLOW_MATCH_MODE	9:8	R/W	Match mode 0: Match on source address 1: Match on destination address 2: Match on either source or destination address 3: Reserved	0x0
INGR1_IP2_CHANNEL_MASK	5:4	R/W	Channel mask 0x0: Flow invalid 0x1: Flow valid for channel 0 0x2: Flow valid for channel 1 0x3: Flow valid for both channels	0x3
INGR1_IP2_FLOW_ENA	0	R/W	Flow enable. If this comparator block is not used, all flow enable bits must be set to 0. 0: Flow disabled 1: Flow enabled	0x0

4.12.10.2 ETHERNET_COMPARATOR:INGR1_IP2_FLOW_CFG:INGR1_IP2_FLOW_MATCH_UPPER

Parent: ETHERNET_COMPARATOR:INGR1_IP2_FLOW_CFG

Instances: 1

Table 563 • **Fields in INGR1_IP2_FLOW_MATCH_UPPER**

Field Name	Bit	Access	Description	Default
INGR1_IP2_FLOW_MATCH_UPPER	31:0	R/W	Match field for either the entire 32-bit selected address for IPv4 or the upper 32 bits of the selected address for IPv6	0x00000000

4.12.10.3 ETHERNET_COMPARATOR:INGR1_IP2_FLOW_CFG:INGR1_IP2_FLOW_MATCH_UPPER_MID

Parent: ETHERNET_COMPARATOR:INGR1_IP2_FLOW_CFG

Instances: 1

Table 564 • **Fields in INGR1_IP2_FLOW_MATCH_UPPER_MID**

Field Name	Bit	Access	Description	Default
INGR1_IP2_FLOW_MATCH_UPPER_MID	31:0	R/W	Match bits for the upper middle 32 bits of the IPv6 address	0x00000000

4.12.10.4 ETHERNET_COMPARATOR:INGR1_IP2_FLOW_CFG:INGR1_IP2_FLOW_MATCH_LOWER_MID

Parent: ETHERNET_COMPARATOR:INGR1_IP2_FLOW_CFG

Instances: 1

Table 565 • **Fields in INGR1_IP2_FLOW_MATCH_LOWER_MID**

Field Name	Bit	Access	Description	Default
INGR1_IP2_FLOW_MATCH_LOWER_MID	31:0	R/W	Match bits for the lower middle 32 bits of the IPv6 address	0x00000000

4.12.10.5 ETHERNET_COMPARATOR:INGR1_IP2_FLOW_CFG:INGR1_IP2_FLOW_MATCH_LOWER

Parent: ETHERNET_COMPARATOR:INGR1_IP2_FLOW_CFG

Instances: 1

Table 566 • **Fields in INGR1_IP2_FLOW_MATCH_LOWER**

Field Name	Bit	Access	Description	Default
INGR1_IP2_FLOW_MATCH_LOWER	31:0	R/W	Match bits for the lower 32 bits of the IPv6 address	0x00000000

4.12.10.6 ETHERNET_COMPARATOR:INGR1_IP2_FLOW_CFG:INGR1_IP2_FLOW_MASK_UPPER

Parent: ETHERNET_COMPARATOR:INGR1_IP2_FLOW_CFG

Instances: 1

Table 567 • **Fields in INGR1_IP2_FLOW_MASK_UPPER**

Field Name	Bit	Access	Description	Default
INGR1_IP2_FLOW_MASK_UPPER	31:0	R/W	Address mask for the IP address. It uses CIDR format and specifies a number of sequential bits to be used for matching, and a number of sequential bits that are not checked. IP addresses specified in CIDR format look like the following example: 192.0.0.5/24 In this example, the upper 24 bits are significant and the lower 8 bits are not checked. This can be swapped by setting the CIDR_DIRECTION register to 1 (normally it is 0) so that in the above example, the upper 8 bits would not be checked and the lower 24 bits would be checked. For IPv4 the allowable range is 1 - 32 For IPv6 the allowable range is 1 - 128 All other values are not defined	0x00000000

4.12.10.7 ETHERNET_COMPARATOR:INGR1_IP2_FLOW_CFG:INGR1_IP2_FLOW_MASK_UPPER_MID

Parent: ETHERNET_COMPARATOR:INGR1_IP2_FLOW_CFG

Instances: 1

Table 568 • **Fields in INGR1_IP2_FLOW_MASK_UPPER_MID**

Field Name	Bit	Access	Description	Default
INGR1_IP2_FLOW_MASK_UPPER_MID	31:0	R/W	These bits must be all 0 for IPv4 and any 32-bit address match mode	0x00000000

4.12.10.8 ETHERNET_COMPARATOR:INGR1_IP2_FLOW_CFG:INGR1_IP2_FLOW_MASK_LOWER_MID

Parent: ETHERNET_COMPARATOR:INGR1_IP2_FLOW_CFG

Instances: 1

Table 569 • **Fields in INGR1_IP2_FLOW_MASK_LOWER_MID**

Field Name	Bit	Access	Description	Default
INGR1_IP2_FLOW_MASK_LOWER_MID	31:0	R/W	These bits must be all 0 for IPv4 and any 32-bit address match mode	0x00000000

4.12.10.9 ETHERNET_COMPARATOR:INGR1_IP2_FLOW_CFG:INGR1_IP2_FLOW_MASK_LOWER

Parent: ETHERNET_COMPARATOR:INGR1_IP2_FLOW_CFG

Instances: 1

Table 570 • **Fields in INGR1_IP2_FLOW_MASK_LOWER**

Field Name	Bit	Access	Description	Default
INGR1_IP2_FLOW_MASK_LOWER	31:0	R/W	These bits must be all 0 for IPv4 and any 32-bit address match mode	0x00000000

4.12.11 ETHERNET_COMPARATOR:INGR1_PTP_FLOW

Parent: Egress0 Ethernet Comparator

Instances: 6

Table 571 • **Registers in INGR1_PTP_FLOW**

Register Name	Offset within Register Group	Instances and Address Spacing	Description	Details
INGR1_PTP_FLOW_ENA	0x00000000	1	PTP/OAM flow enable	Page 311
INGR1_PTP_FLOW_MATCH_UPPER	0x00000004	1	Upper half of PTP/OAM flow match field	Page 312
INGR1_PTP_FLOW_MATCH_LOWER	0x00000008	1	Lower half of PTP/OAM flow match field	Page 312
INGR1_PTP_FLOW_MASK_UPPER	0x0000000C	1	Upper half of PTP/OAM flow match mask	Page 312
INGR1_PTP_FLOW_MASK_LOWER	0x00000010	1	Lower half of PTP/OAM flow match mask	Page 312
INGR1_PTP_DOMAIN_RANGE	0x00000014	1	PTP/OAM range match register	Page 313
INGR1_PTP_ACTION	0x00000018	1	PTP action control register	Page 313
INGR1_PTP_ACTION_2	0x0000001C	1	PTP action control register 2	Page 314
INGR1_PTP_ZERO_FIELD_CTL	0x00000020	1	Zero field control register	Page 314

4.12.11.1 ETHERNET_COMPARATOR:INGR1_PTP_FLOW:INGR1_PTP_FLOW_ENA

Parent: ETHERNET_COMPARATOR:INGR1_PTP_FLOW

Instances: 1

Table 572 • **Fields in INGR1_PTP_FLOW_ENA**

Field Name	Bit	Access	Description	Default
INGR1_PTP_CHANNEL_MASK	5:4	R/W	Channel mask 0x0: Flow invalid 0x1: Flow valid for channel 0 0x2: Flow valid for channel 1 0x3: Flow valid for both channels	0x3
INGR1_PTP_FLOW_ENA	0	R/W	Flow enable	0x0

4.12.11.2 ETHERNET_COMPARATOR:INGR1_PTP_FLOW:INGR1_PTP_FLOW_MATCH_UPPER

Parent: ETHERNET_COMPARATOR:INGR1_PTP_FLOW

Instances: 1

Table 573 • **Fields in INGR1_PTP_FLOW_MATCH_UPPER**

Field Name	Bit	Access	Description	Default
INGR1_PTP_FLOW_MATCH_UPPER	31:0	R/W	PTP flow match, upper 32 bit	0x00000000

4.12.11.3 ETHERNET_COMPARATOR:INGR1_PTP_FLOW:INGR1_PTP_FLOW_MATCH_LOWER

Parent: ETHERNET_COMPARATOR:INGR1_PTP_FLOW

Instances: 1

Table 574 • **Fields in INGR1_PTP_FLOW_MATCH_LOWER**

Field Name	Bit	Access	Description	Default
INGR1_PTP_FLOW_MATCH_LOWER	31:0	R/W	PTP flow match, lower 32 bit	0x00000000

4.12.11.4 ETHERNET_COMPARATOR:INGR1_PTP_FLOW:INGR1_PTP_FLOW_MASK_UPPER

Parent: ETHERNET_COMPARATOR:INGR1_PTP_FLOW

Instances: 1

Table 575 • **Fields in INGR1_PTP_FLOW_MASK_UPPER**

Field Name	Bit	Access	Description	Default
INGR1_PTP_FLOW_MASK_UPPER	31:0	R/W	PTP flow mask, upper 32 bit	0x00000000

4.12.11.5 ETHERNET_COMPARATOR:INGR1_PTP_FLOW:INGR1_PTP_FLOW_MASK_LOWER

Parent: ETHERNET_COMPARATOR:INGR1_PTP_FLOW

Instances: 1

Table 576 • **Fields in INGR1_PTP_FLOW_MASK_LOWER**

Field Name	Bit	Access	Description	Default
INGR1_PTP_FLOW_MASK_LOWER	31:0	R/W	PTP flow mask, lower 32 bit	0x00000000

4.12.11.6 ETHERNET_COMPARATOR:INGR1_PTP_FLOW:INGR1_PTP_DOMAIN_RANGE

Parent: ETHERNET_COMPARATOR:INGR1_PTP_FLOW

Instances: 1

Table 577 • **Fields in INGR1_PTP_DOMAIN_RANGE**

Field Name	Bit	Access	Description	Default
INGR1_PTP_DOMAIN_RANGE_OFFSET	28:24	R/W	PTP domain range offset	0x00
INGR1_PTP_DOMAIN_RANGE_UPPER	23:16	R/W	Upper range of PTP domain field to match	0xFF
INGR1_PTP_DOMAIN_RANGE_LOWER	15:8	R/W	Lower range of PTP domain field to match	0x00
INGR1_PTP_DOMAIN_RANGE_ENA	0	R/W	Enable PTP domain range checking	0x0

4.12.11.7 ETHERNET_COMPARATOR:INGR1_PTP_FLOW:INGR1_PTP_ACTION

Parent: ETHERNET_COMPARATOR:INGR1_PTP_FLOW

Instances: 1

Table 578 • **Fields in INGR1_PTP_ACTION**

Field Name	Bit	Access	Description	Default
INGR1_PTP_MOD_FRAME_STAT_UPDATE	28	R/W	Modified frame status update 0: Do not signal the rewriter to update the value of the Modified Frame Status bit 1: Signal the rewriter to update the value of the Modified Frame Status bit	0x0
INGR1_PTP_MOD_FRAME_BYTE_OFFSET	26:24	R/W	Indicates the position relative to the start of the PTP frame in bytes where the Modified Frame Status bit resides	0x0
INGR1_PTP_SUB_DELAY_ASYM_ENA	21	R/W	Enable subtract delay asymmetry signal 0: Do not signal the timestamp block to subtract the asymmetry delay 1: Signal the timestamp block to subtract the asymmetry delay	0x0
INGR1_PTP_ADD_DELAY_ASYM_ENA	20	R/W	Enable add delay asymmetry signal 0: Do not signal the timestamp block to add the asymmetry delay 1: Signal the timestamp block to add the asymmetry delay	0x0
INGR1_PTP_TIME_STRG_FIELD_OFFSET	15:10	R/W	Time storage field offset The location in a PTP frame where a time value can be stored or read	0x00

Table 578 • **Fields in INGR1_PTP_ACTION *(continued)***

Field Name	Bit	Access	Description	Default
INGR1_PTP_CORR_FIELD_OFFSET	9:5	R/W	Points to the location of the correction field for updating the timestamp. Location is relative to the first byte of the PTP/OAM header. **Note:** If this flow is being used to match OAM frames, set this register to 4.	0x00
INGR1_PTP_SAVE_LOCAL_TIME	4	R/W	Enable saving time 0: Do not save the time to the timestamp FIFO 1: Save the local time to the timestamp FIFO	0x0
INGR1_PTP_COMMAND	3:0	R/W	PTP action command 0: NOP 1: SUB 2: SUB_P2P 3: ADD 4: SUB_ADD 5: WRITE_1588 6: WRITE_P2P (deprecated) 7: WRITE_NS 8: WRITE_NS_P2P	0x0

4.12.11.8 ETHERNET_COMPARATOR:INGR1_PTP_FLOW:INGR1_PTP_ACTION_2

Parent: ETHERNET_COMPARATOR:INGR1_PTP_FLOW

Instances: 1

Table 579 • **Fields in INGR1_PTP_ACTION_2**

Field Name	Bit	Access	Description	Default
INGR1_PTP_NEW_CF_LOC	23:16	R/W	Location of the new correction field relative to the PTP header start. Only even values are allowed.	0x00
INGR1_PTP_REWRITE_OFFSET	15:8	R/W	Points to where in the frame relative to the SFD that the timestamp should be updated	0x00
INGR1_PTP_REWRITE_BYTES	3:0	R/W	Number of bytes in the PTP or OAM frame that must be modified by the rewriter for the timestamp	0x0

4.12.11.9 ETHERNET_COMPARATOR:INGR1_PTP_FLOW:INGR1_PTP_ZERO_FIELD_CTL

Parent: ETHERNET_COMPARATOR:INGR1_PTP_FLOW

Instances: 1

Table 580 • **Fields in INGR1_PTP_ZERO_FIELD_CTL**

Field Name	Bit	Access	Description	Default
INGR1_PTP_ZERO_FIELD_OFFSET	13:8	R/W	Points to a location in the PTP/OAM frame relative to the start of the PTP header that will be zeroed if this function is enabled	0x00
INGR1_PTP_ZERO_FIELD_BYTE_CNT	3:0	R/W	The number of bytes to be zeroed. If this field is 0, then this function is not enabled.	0x0

4.12.12 ETHERNET_COMPARATOR:INGR1_PTP_IP_CHKSUM_CTL

Parent: Egress0 Ethernet Comparator

Instances: 1

Table 581 • **Registers in INGR1_PTP_IP_CHKSUM_CTL**

Register Name	Offset within Register Group	Instances and Address Spacing	Description	Details
INGR1_PTP_IP_CKSUM_SEL	0x00000000	1	IP checksum block select	Page 315

4.12.12.1 ETHERNET_COMPARATOR:INGR1_PTP_IP_CHKSUM_CTL:INGR1_PTP_IP_CKSUM_SEL

Parent: ETHERNET_COMPARATOR:INGR1_PTP_IP_CHKSUM_CTL

Instances: 1

Table 582 • **Fields in INGR1_PTP_IP_CKSUM_SEL**

Field Name	Bit	Access	Description	Default
INGR1_PTP_IP_CHKSUM_SEL	0	R/W	IP checksum controls selection 0: Use the IP checksum controls from IP comparator 1 1: Use the IP checksum controls from IP comparator 2	0x0

4.13 Egress2 Ethernet Comparator

Table 583 • **Register Groups in Egress2 Ethernet Comparator**

Register Group Name	Offset within Target	Instances and Address Spacing	Description	Details
EGR2_ETH1_NXT_PROTOCOL_A	0x00000000	1	Ethernet next protocol configuration	Page 316
EGR2_ETH1_NXT_PROTOCOL_B	0x00000040	1	Ethernet next protocol configuration	Page 318

Table 583 • **Register Groups in Egress2 Ethernet Comparator *(continued)***

Register Group Name	Offset within Target	Instances and Address Spacing	Description	Details
EGR2_ETH1_FLOW_CFG	0x00000080	8 0x00000040	Ethernet flow configuration	Page 319
EGR2_ETH2_NXT_PROTOCOL_A	0x00000280	1	Ethernet next protocol configuration	Page 323
EGR2_ETH2_FLOW_CFG	0x00000300	8 0x00000040	Ethernet flow configuration	Page 324
EGR2_MPLS_NXT_COMPARATOR_A	0x00000500	1	MPLS next protocol register	Page 328
EGR2_MPLS_FLOW_CFG	0x00000580	8 0x00000040	MPLS flow configuration	Page 329
EGR2_PTP_FLOW	0x00000780	6 0x00000040	PTP flow configuration	Page 332

4.13.1 ETHERNET_COMPARATOR:EGR2_ETH1_NXT_PROTOCOL_A

Parent: Egress0 Ethernet Comparator

Instances: 1

Table 584 • **Registers in EGR2_ETH1_NXT_PROTOCOL_A**

Register Name	Offset within Register Group	Instances and Address Spacing	Description	Details
EGR2_ETH1_NXT_PROTOCOL_A	0x00000000	1	Ethernet next protocol register	Page 316
EGR2_ETH1_VLAN_TPID_CFG_A	0x00000004	1	VLAN TPID configuration	Page 317
EGR2_ETH1_TAG_MODE_A	0x00000008	1	Ethernet tag mode	Page 317
EGR2_ETH1_ETYPE_MATCH_A	0x0000000C	1	Ethertype match register	Page 317

4.13.1.1 ETHERNET_COMPARATOR:EGR2_ETH1_NXT_PROTOCOL_A:EGR2_ETH1_NXT_PROTOCOL_A

Parent: ETHERNET_COMPARATOR:EGR2_ETH1_NXT_PROTOCOL_A

Instances: 1

Table 585 • **Fields in EGR2_ETH1_NXT_PROTOCOL_A**

Field Name	Bit	Access	Description	Default
EGR2_ETH1_NXT_COMPARATOR_A	2:0	R/W	Points to the next comparator block after this Ethernet block 0: Reserved 1: Ethernet comparator 2 2: IP/UDP/ACH comparator 1 3: IP/UDP/ACH comparator 2 4: MPLS comparator 5: PTP/OAM comparator 6,7: Reserved	0x0

4.13.1.2 ETHERNET_COMPARATOR:EGR2_ETH1_NXT_PROTOCOL_A:EGR2_ETH1_VLAN_TPID_CFG_A

Parent: ETHERNET_COMPARATOR:EGR2_ETH1_NXT_PROTOCOL_A

Instances: 1

Table 586 • **Fields in EGR2_ETH1_VLAN_TPID_CFG_A**

Field Name	Bit	Access	Description	Default
EGR2_ETH1_VLAN_TPID_CFG_A	31:16	R/W	Configurable VLAN TPID (S or B-tag)	0x88A8

4.13.1.3 ETHERNET_COMPARATOR:EGR2_ETH1_NXT_PROTOCOL_A:EGR2_ETH1_TAG_MODE_A

Parent: ETHERNET_COMPARATOR:EGR2_ETH1_NXT_PROTOCOL_A

Instances: 1

Table 587 • **Fields in EGR2_ETH1_TAG_MODE_A**

Field Name	Bit	Access	Description	Default
EGR2_ETH1_PBB_ENA_A	0	R/W	This bit enables the presence of PBB. The I-tag match bits are programmed in the ETH1_VLAN_TAG_RANGE registers. The mask bits are programmed in the ETH1_VLAN_TAG2 registers. A B-tag if present is configured in the ETH1_VLAN_TAG1 registers. 0: PBB not enabled 1: Always expect PBB, last tag is always an I-tag	0x0

4.13.1.4 ETHERNET_COMPARATOR:EGR2_ETH1_NXT_PROTOCOL_A:EGR2_ETH1_ETYPE_MATCH_A

Parent: ETHERNET_COMPARATOR:EGR2_ETH1_NXT_PROTOCOL_A

Instances: 1

Table 588 • **Fields in EGR2_ETH1_ETYPE_MATCH_A**

Field Name	Bit	Access	Description	Default
EGR2_ETH1_ETYPE_MATCH_A	15:0	R/W	If the Ethertype/length field is an Ethertype, then this register is compared against the value. If the field is a length, the length value is not checked.	0x0000

4.13.2 ETHERNET_COMPARATOR:EGR2_ETH1_NXT_PROTOCOL_B

Parent: Egress0 Ethernet Comparator

Instances: 1

Table 589 • **Registers in EGR2_ETH1_NXT_PROTOCOL_B**

Register Name	Offset within Register Group	Instances and Address Spacing	Description	Details
EGR2_ETH1_NXT_PROTOCOL_B	0x00000000	1	Ethernet next protocol register	Page 318
EGR2_ETH1_VLAN_TPID_CFG_B	0x00000004	1	VLAN TPID configuration	Page 318
EGR2_ETH1_TAG_MODE_B	0x00000008	1	Ethernet tag mode	Page 319
EGR2_ETH1_ETYPE_MATCH_B	0x0000000C	1	Ethertype match register	Page 319

4.13.2.1 ETHERNET_COMPARATOR:EGR2_ETH1_NXT_PROTOCOL_B:EGR2_ETH1_NXT_PROTOCOL_B

Parent: ETHERNET_COMPARATOR:EGR2_ETH1_NXT_PROTOCOL_B

Instances: 1

Table 590 • **Fields in EGR2_ETH1_NXT_PROTOCOL_B**

Field Name	Bit	Access	Description	Default
EGR2_ETH1_NXT_COMPARATOR_B	2:0	R/W	Points to the next comparator block after this Ethernet block 0: Reserved 1: Ethernet comparator 2 2: IP/UDP/ACH comparator 1 3: IP/UDP/ACH comparator 2 4: MPLS comparator 5: PTP/OAM comparator 6,7: Reserved	0x0

4.13.2.2 ETHERNET_COMPARATOR:EGR2_ETH1_NXT_PROTOCOL_B:EGR2_ETH1_VLAN_TPID_CFG_B

Parent: ETHERNET_COMPARATOR:EGR2_ETH1_NXT_PROTOCOL_B

Instances: 1

Table 591 • **Fields in EGR2_ETH1_VLAN_TPID_CFG_B**

Field Name	Bit	Access	Description	Default
EGR2_ETH1_VLAN_TPID_CFG_B	15:0	R/W	Configurable VLAN TPID (S or B-tag)	0x88A8

4.13.2.3 ETHERNET_COMPARATOR:EGR2_ETH1_NXT_PROTOCOL_B:EGR2_ETH1_TAG_MODE_B

Parent: ETHERNET_COMPARATOR:EGR2_ETH1_NXT_PROTOCOL_B

Instances: 1

Table 592 • **Fields in EGR2_ETH1_TAG_MODE_B**

Field Name	Bit	Access	Description	Default
EGR2_ETH1_PBB_ENA_B	0	R/W	This bit enables the presence of PBB. The I-tag match bits are programmed in the ETH1_VLAN_TAG_RANGE registers. The mask bits are programmed in the ETH1_VLAN_TAG2 registers. A B-tag if present is configured in the ETH1_VLAN_TAG1 registers. 0: PBB not enabled 1: Always expect PBB, last tag is always an I-tag	0x0

4.13.2.4 ETHERNET_COMPARATOR:EGR2_ETH1_NXT_PROTOCOL_B:EGR2_ETH1_ETYPE_MATCH_B

Parent: ETHERNET_COMPARATOR:EGR2_ETH1_NXT_PROTOCOL_B

Instances: 1

Table 593 • **Fields in EGR2_ETH1_ETYPE_MATCH_B**

Field Name	Bit	Access	Description	Default
EGR2_ETH1_ETYPE_MATCH_B	15:0	R/W	If the Ethertype/length field is an Ethertype, then this register is compared against the value. If the field is a length, the length value is not checked.	0x0000

4.13.3 ETHERNET_COMPARATOR:EGR2_ETH1_FLOW_CFG

Parent: Egress0 Ethernet Comparator

Instances: 8

Table 594 • **Registers in EGR2_ETH1_FLOW_CFG**

Register Name	Offset within Register Group	Instances and Address Spacing	Description	Details
EGR2_ETH1_FLOW_ENABLE	0x00000000	1	Ethernet flow enable	Page 320
EGR2_ETH1_MATCH_MODE	0x00000004	1	Ethernet protocol match mode	Page 320
EGR2_ETH1_ADDR_MATCH_1	0x00000008	1	Ethernet address match part 1	Page 321
EGR2_ETH1_ADDR_MATCH_2	0x0000000C	1	Ethernet address match part 2	Page 322
EGR2_ETH1_VLAN_TAG_RANGE_I_TAG	0x00000010	1	Ethernet VLAN tag range match register	Page 322
EGR2_ETH1_VLAN_TAG1	0x00000014	1	VLAN tag 1 match/mask	Page 323
EGR2_ETH1_VLAN_TAG2_I_TAG	0x00000018	1	Match/mask for VLAN tag 2 or I-tag match	Page 323

4.13.3.1 ETHERNET_COMPARATOR:EGR2_ETH1_FLOW_CFG:EGR2_ETH1_FLOW_ENABLE

Parent: ETHERNET_COMPARATOR:EGR2_ETH1_FLOW_CFG

Instances: 1

Table 595 • **Fields in EGR2_ETH1_FLOW_ENABLE**

Field Name	Bit	Access	Description	Default
EGR2_ETH1_NXT_PROT_GRP_SEL	16	R/W	Indicates which next-protocol configuration group is valid with this flow 0: Associate this flow with next-protocol group A 1: Associate this flow with next-protocol group B	0x0
EGR2_ETH1_CHANNEL_MASK	9:8	R/W	Channel mask 0x0: Flow invalid 0x1: Flow valid for channel 0 0x2: Flow valid for channel 1 0x3: Flow valid for both channels	0x3
EGR2_ETH1_FLOW_ENABLE	0	R/W	Flow enable 0: Flow disabled 1: Flow enabled	0x0

4.13.3.2 ETHERNET_COMPARATOR:EGR2_ETH1_FLOW_CFG:EGR2_ETH1_MATCH_MODE

Parent: ETHERNET_COMPARATOR:EGR2_ETH1_FLOW_CFG

Instances: 1

Table 596 • **Fields in EGR2_ETH1_MATCH_MODE**

Field Name	Bit	Access	Description	Default
EGR2_ETH1_VLAN_TAG_MODE	13:12	R/W	0: VLAN range checking disabled 1: VLAN range checking on tag 1 2: VLAN range checking on tag 2 (not supported with PBB) 3: Reserved	0x0
EGR2_ETH1_VLAN_TAG2_TYPE	9	R/W	This register is only used if ETH1_VLAN_VERIFY_ENA = 1 If PBB not enabled: 0: C tag (TPID of 0x8100) 1: S tag (match to CONF_VLAN_TPID) If PBB enabled: 0,1: I tag (use range registers)	0x1
EGR2_ETH1_VLAN_TAG1_TYPE	8	R/W	This register is only used if ETH1_VLAN_VERIFY_ENA = 1 0: C tag (TPID of 0x8100) 1: S or B tag (match to CONF_VLAN_TPID)	0x0
EGR2_ETH1_VLAN_TAGS	7:6	R/W	This register is only used if ETH1_VLAN_VERIFY_ENA = 1 0: No VLAN tags (not valid for PBB) 1: 1 VLAN tag (for PBB this would be the I-tag) 2: 2 VLAN tags (for PBB expect a B-tag and an I-tag) 3: Reserved	0x0
EGR2_ETH1_VLAN_VERIFY_ENA	4	R/W	0: Parse for VLAN tags; do not check values. For PBB the I-tag is always checked. 1: Verify configured VLAN tag configuration.	0x0
EGR2_ETH1_ETHERTYPE_MODE	0	R/W	When checking for presence of SNAP/LLC based upon ETH1_MATCH_MODE, this field indicates if SNAP and 3-byte LLC is expected to be present. 0: Only Ethernet type II supported, no SNAP/LLC 1: Ethernet type II and Ethernet type I with SNAP/LLC, determine if SNAP/LLC is present or not. Type I always assumes that SNAP/LLC is present.	0x0

4.13.3.3 ETHERNET_COMPARATOR:EGR2_ETH1_FLOW_CFG:EGR2_ETH1_ADDR_MATCH_1

Parent: ETHERNET_COMPARATOR:EGR2_ETH1_FLOW_CFG

Instances: 1

Table 597 • **Fields in EGR2_ETH1_ADDR_MATCH_1**

Field Name	Bit	Access	Description	Default
EGR2_ETH1_ADDR_MATCH_1	31:0	R/W	First 32 bits of the address match value	0x00000000

4.13.3.4 ETHERNET_COMPARATOR:EGR2_ETH1_FLOW_CFG:EGR2_ETH1_ADDR_MATCH_2

Parent: ETHERNET_COMPARATOR:EGR2_ETH1_FLOW_CFG

Instances: 1

Table 598 • **Fields in EGR2_ETH1_ADDR_MATCH_2**

Field Name	Bit	Access	Description	Default
EGR2_ETH1_ADDR_MATCH_MODE	22:20	R/W	Selects how the addresses are matched. One-hot encoded. Multiple bits can be set at once. 0: Full 48-bit address match 1: Match any unicast address 2: Match any mulitcast address	0x1
EGR2_ETH1_ADDR_MATCH_SELECT	17:16	R/W	Selects which address to match 0: Match the destination address 1: Match the source address 2: Match either the source of destination address 3: Reserved	0x0
EGR2_ETH1_ADDR_MATCH_2	15:0	R/W	Last 16 bits of the Ethernet address match field	0x0000

4.13.3.5 ETHERNET_COMPARATOR:EGR2_ETH1_FLOW_CFG:EGR2_ETH1_VLAN_TAG_RANGE_I_TAG

Parent: ETHERNET_COMPARATOR:EGR2_ETH1_FLOW_CFG

Instances: 1

Table 599 • **Fields in EGR2_ETH1_VLAN_TAG_RANGE_I_TAG**

Field Name	Bit	Access	Description	Default
EGR2_ETH1_VLAN_TAG_RANGE_UPPER	27:16	R/W	If PBB mode is not enabled, then this register contains the upper range of the VLAN tag range match. If PBB mode is enabled, then this register contains the upper 12 bits of the I-tag.	0xFFF
EGR2_ETH1_VLAN_TAG_RANGE_LOWER	11:0	R/W	If PBB mode is not enabled, then this register contains the lower range of the VLAN tag range match. If PBB mode is enabled, then this register contains the lower 12 bits of the I-tag.	0x000

4.13.3.6 ETHERNET_COMPARATOR:EGR2_ETH1_FLOW_CFG:EGR2_ETH1_VLAN_TAG1

Parent: ETHERNET_COMPARATOR:EGR2_ETH1_FLOW_CFG

Instances: 1

Table 600 • **Fields in EGR2_ETH1_VLAN_TAG1**

Field Name	Bit	Access	Description	Default
EGR2_ETH1_VLAN_TAG1_MASK	27:16	R/W	Mask value for VLAN tag 1	0xFFF
EGR2_ETH1_VLAN_TAG1_MATCH	11:0	R/W	Match value for the first VLAN tag	0x000

4.13.3.7 ETHERNET_COMPARATOR:EGR2_ETH1_FLOW_CFG:EGR2_ETH1_VLAN_TAG2_I_TAG

Parent: ETHERNET_COMPARATOR:EGR2_ETH1_FLOW_CFG

Instances: 1

Table 601 • **Fields in EGR2_ETH1_VLAN_TAG2_I_TAG**

Field Name	Bit	Access	Description	Default
EGR2_ETH1_VLAN_TAG2_MASK	27:16	R/W	When PBB is not enabled, the mask field for VLAN tag 2 When PBB is enabled, the upper 12 bits of the I-tag mask	0xFFF
EGR2_ETH1_VLAN_TAG2_MATCH	11:0	R/W	When PBB is not enabled, the match field for VLAN Tag 2 When PBB is enabled, the lower 12 bits of the I-tag mask field	0x000

4.13.4 ETHERNET_COMPARATOR:EGR2_ETH2_NXT_PROTOCOL_A

Parent: Egress0 Ethernet Comparator

Instances: 1

Table 602 • **Registers in EGR2_ETH2_NXT_PROTOCOL_A**

Register Name	Offset within Register Group	Instances and Address Spacing	Description	Details
EGR2_ETH2_NXT_PROTOCOL_A	0x00000000	1	Ethernet next protocol register	Page 324
EGR2_ETH2_VLAN_TPID_CFG_A	0x00000004	1	VLAN TPID configuration	Page 324
EGR2_ETH2_ETYPE_MATCH_A	0x00000008	1	Ethertype match register	Page 324

4.13.4.1 ETHERNET_COMPARATOR:EGR2_ETH2_NXT_PROTOCOL_A:EGR2_ETH2_NXT_PROTOCOL_A

Parent: ETHERNET_COMPARATOR:EGR2_ETH2_NXT_PROTOCOL_A

Instances: 1

Table 603 • **Fields in EGR2_ETH2_NXT_PROTOCOL_A**

Field Name	Bit	Access	Description	Default
EGR2_ETH2_NXT_COMPARATOR_A	2:0	R/W	Points to the next comparator block after this Ethernet block. If this comparator block is not used, this field must be set to 0. 0: Comparator block not used 1: Ethernet comparator 2 2: IP/UDP/ACH comparator 1 3: IP/UDP/ACH comparator 2 4: MPLS comparator 5: PTP/OAM comparator 6,7: Reserved	0x0

4.13.4.2 ETHERNET_COMPARATOR:EGR2_ETH2_NXT_PROTOCOL_A:EGR2_ETH2_VLAN_TPID_CFG_A

Parent: ETHERNET_COMPARATOR:EGR2_ETH2_NXT_PROTOCOL_A

Instances: 1

Table 604 • **Fields in EGR2_ETH2_VLAN_TPID_CFG_A**

Field Name	Bit	Access	Description	Default
EGR2_ETH2_VLAN_TPID_CFG_A	31:16	R/W	Configurable S-tag TPID	0x88A8

4.13.4.3 ETHERNET_COMPARATOR:EGR2_ETH2_NXT_PROTOCOL_A:EGR2_ETH2_ETYPE_MATCH_A

Parent: ETHERNET_COMPARATOR:EGR2_ETH2_NXT_PROTOCOL_A

Instances: 1

Table 605 • **Fields in EGR2_ETH2_ETYPE_MATCH_A**

Field Name	Bit	Access	Description	Default
EGR2_ETH2_ETYPE_MATCH_A	15:0	R/W	If the Ethertype/length field is an Ethertype, then this register is compared against the value. If the field is a length, the length value is not checked.	0x0000

4.13.5 ETHERNET_COMPARATOR:EGR2_ETH2_FLOW_CFG

Parent: Egress0 Ethernet Comparator

Instances: 8

Table 606 • **Registers in EGR2_ETH2_FLOW_CFG**

Register Name	Offset within Register Group	Instances and Address Spacing	Description	Details
EGR2_ETH2_FLOW_ENABLE	0x00000000	1	Ethernet flow enable	Page 325
EGR2_ETH2_MATCH_MODE	0x00000004	1	Ethernet protocol match mode	Page 325
EGR2_ETH2_ADDR_MATCH_1	0x00000008	1	Ethernet address match part 1	Page 326
EGR2_ETH2_ADDR_MATCH_2	0x0000000C	1	Ethernet address match part 2	Page 327
EGR2_ETH2_VLAN_TAG_RANGE_I_TAG	0x00000010	1	Ethernet VLAN tag range match register	Page 327
EGR2_ETH2_VLAN_TAG1	0x00000014	1	VLAN tag 1 match/mask	Page 327
EGR2_ETH2_VLAN_TAG2_I_TAG	0x00000018	1	Match/mask for VLAN tag 2 or I-tag match	Page 328

4.13.5.1 ETHERNET_COMPARATOR:EGR2_ETH2_FLOW_CFG:EGR2_ETH2_FLOW_ENABLE

Parent: ETHERNET_COMPARATOR:EGR2_ETH2_FLOW_CFG

Instances: 1

Table 607 • **Fields in EGR2_ETH2_FLOW_ENABLE**

Field Name	Bit	Access	Description	Default
EGR2_ETH2_CHANNEL_MASK	9:8	R/W	Channel mask 0x0: Flow invalid 0x1: Flow valid for channel 0 0x2: Flow valid for channel 1 0x3: Flow valid for both channels	0x3
EGR2_ETH2_FLOW_ENABLE	0	R/W	Flow enable. If this comparator block is not used, all flow enable bits must be set to 0. 0: Flow disabled 1: Flow enabled	0x0

4.13.5.2 ETHERNET_COMPARATOR:EGR2_ETH2_FLOW_CFG:EGR2_ETH2_MATCH_MODE

Parent: ETHERNET_COMPARATOR:EGR2_ETH2_FLOW_CFG

Instances: 1

Table 608 • **Fields in EGR2_ETH2_MATCH_MODE**

Field Name	Bit	Access	Description	Default
EGR2_ETH2_VLAN_TAG_MODE	13:12	R/W	0: VLAN range checking disabled 1: VLAN range checking on tag 1 2: VLAN range checking on tag 2 (not supported with PBB) 3: Reserved	0x0
EGR2_ETH2_VLAN_TAG2_TYPE	9	R/W	This register is only used if ETH1_VLAN_VERIFY_ENA = 1 0: C tag (TPID of 0x8100) 1: S tag (match to CONF_VLAN_TPID)	0x1
EGR2_ETH2_VLAN_TAG1_TYPE	8	R/W	This register is only used if ETH1_VLAN_VERIFY_ENA = 1 0: C tag (TPID of 0x8100) 1: S or B tag (match to CONF_VLAN_TPID)	0x0
EGR2_ETH2_VLAN_TAGS	7:6	R/W	This register is only used if ETH2_VLAN_VERIFY_ENA = 1 0: No VLAN tags 1: 1 VLAN tag 2: 2 VLAN tags 3: Reserved	0x0
EGR2_ETH2_VLAN_VERIFY_ENA	4	R/W	0: Parse for VLAN tags, do not check values. 1: Verify configured VLAN tag configuration.	0x0
EGR2_ETH2_ETHERTYPE_MODE	0	R/W	When checking for presence of SNAP/LLC based upon ETH1_MATCH_MODE, this field indicates if SNAP and 3-byte LLC is expected to be present. 0: Only Ethernet type II supported, no SNAP/LLC 1: Ethernet type II and Ethernet type I with SNAP/LLC, determine if SNAP/LLC is present. Type I always assumes that SNAP/LLC is present	0x0

4.13.5.3 ETHERNET_COMPARATOR:EGR2_ETH2_FLOW_CFG:EGR2_ETH2_ADDR_MATCH_1

Parent: ETHERNET_COMPARATOR:EGR2_ETH2_FLOW_CFG

Instances: 1

Table 609 • **Fields in EGR2_ETH2_ADDR_MATCH_1**

Field Name	Bit	Access	Description	Default
EGR2_ETH2_ADDR_MATCH_1	31:0	R/W	First 32 bits of the address match value	0x00000000

4.13.5.4 ETHERNET_COMPARATOR:EGR2_ETH2_FLOW_CFG:EGR2_ETH2_ADDR_MATCH_2

Parent: ETHERNET_COMPARATOR:EGR2_ETH2_FLOW_CFG

Instances: 1

Table 610 • **Fields in EGR2_ETH2_ADDR_MATCH_2**

Field Name	Bit	Access	Description	Default
EGR2_ETH2_ADDR_MATCH_MODE	22:20	R/W	Selects how the addresses are matched. One-hot encoded. Multiple bits can be set at once. 0: Full 48-bit address match 1: Match any unicast address 2: Match any mulitcast address	0x1
EGR2_ETH2_ADDR_MATCH_SELECT	17:16	R/W	Selects which address to match 0: Match the destination address 1: Match the source address 2: Match either the source of destination address 3: Reserved	0x0
EGR2_ETH2_ADDR_MATCH_2	15:0	R/W	Last 16 bits of the Ethernet address match field	0x0000

4.13.5.5 ETHERNET_COMPARATOR:EGR2_ETH2_FLOW_CFG:EGR2_ETH2_VLAN_TAG_RANGE_I_TAG

Parent: ETHERNET_COMPARATOR:EGR2_ETH2_FLOW_CFG

Instances: 1

Table 611 • **Fields in EGR2_ETH2_VLAN_TAG_RANGE_I_TAG**

Field Name	Bit	Access	Description	Default
EGR2_ETH2_VLAN_TAG_RANGE_UPPER	27:16	R/W	Contains the upper range of the VLAN tag range match	0xFFF
EGR2_ETH2_VLAN_TAG_RANGE_LOWER	11:0	R/W	Contains the lower range of the VLAN tag range match	0x000

4.13.5.6 ETHERNET_COMPARATOR:EGR2_ETH2_FLOW_CFG:EGR2_ETH2_VLAN_TAG1

Parent: ETHERNET_COMPARATOR:EGR2_ETH2_FLOW_CFG

Instances: 1

Table 612 • **Fields in EGR2_ETH2_VLAN_TAG1**

Field Name	Bit	Access	Description	Default
EGR2_ETH2_VLAN_TAG1_MASK	27:16	R/W	Mask value for VLAN tag 1	0xFFF
EGR2_ETH2_VLAN_TAG1_MATCH	11:0	R/W	Match value for the first VLAN tag	0x000

4.13.5.7 ETHERNET_COMPARATOR:EGR2_ETH2_FLOW_CFG:EGR2_ETH2_VLAN_TAG2_I_TAG

Parent: ETHERNET_COMPARATOR:EGR2_ETH2_FLOW_CFG

Instances: 1

Table 613 • **Fields in EGR2_ETH2_VLAN_TAG2_I_TAG**

Field Name	Bit	Access	Description	Default
EGR2_ETH2_VLAN_TAG2_MASK	27:16	R/W	Mask field for VLAN tag 2	0xFFF
EGR2_ETH2_VLAN_TAG2_MATCH	11:0	R/W	Match field for VLAN Tag 2	0x000

4.13.6 ETHERNET_COMPARATOR:EGR2_MPLS_NXT_COMPARATOR_A

Parent: Egress0 Ethernet Comparator

Instances: 1

Table 614 • **Registers in EGR2_MPLS_NXT_COMPARATOR_A**

Register Name	Offset within Register Group	Instances and Address Spacing	Description	Details
EGR2_MPLS_NXT_COMPARATOR_A	0x00000000	1	MPLS next protocol comparator register	Page 328

4.13.6.1 ETHERNET_COMPARATOR:EGR2_MPLS_NXT_COMPARATOR_A:EGR2_MPLS_NXT_COMPARATOR_A

Parent: ETHERNET_COMPARATOR:EGR2_MPLS_NXT_COMPARATOR_A

Instances: 1

Table 615 • **Fields in EGR2_MPLS_NXT_COMPARATOR_A**

Field Name	Bit	Access	Description	Default
EGR2_MPLS_CTL_WORD_A	16	R/W	Indicates the presence of a control word after the last label 0: No control ward after the last label 1: Control word after the last label	0x0
EGR2_MPLS_NXT_COMPARATOR_A	2:0	R/W	Points to the next comparator stage. If this comparator block is not used, this field must be set to 0. 0: Comparator block not used 1: Ethernet comparator 2 2: IP/UDP/ACH comparator 1 3: IP/UDP/ACH comparator 2 4: Reserved 5: PTP/OAM comparator 6,7: Reserved	0x0

4.13.7 ETHERNET_COMPARATOR:EGR2_MPLS_FLOW_CFG

Parent: Egress0 Ethernet Comparator

Instances: 8

Table 616 • **Registers in EGR2_MPLS_FLOW_CFG**

Register Name	Offset within Register Group	Instances and Address Spacing	Description	Details
EGR2_MPLS_FLOW_CONTROL	0x00000000	1	MPLS flow control register	Page 329
EGR2_MPLS_LABEL_RANGE_LOWER_0	0x00000004	1	MPLS label 0 match range lower value	Page 330
EGR2_MPLS_LABEL_RANGE_UPPER_0	0x00000008	1	MPLS label 0 match range upper value	Page 330
EGR2_MPLS_LABEL_RANGE_LOWER_1	0x0000000C	1	MPLS label 1 match range lower value	Page 330
EGR2_MPLS_LABEL_RANGE_UPPER_1	0x00000010	1	MPLS label 1 match range upper value	Page 331
EGR2_MPLS_LABEL_RANGE_LOWER_2	0x00000014	1	MPLS label 2 match range lower value	Page 331
EGR2_MPLS_LABEL_RANGE_UPPER_2	0x00000018	1	MPLS label 2 match range upper value	Page 331
EGR2_MPLS_LABEL_RANGE_LOWER_3	0x0000001C	1	MPLS label 3 match range lower value	Page 331
EGR2_MPLS_LABEL_RANGE_UPPER_3	0x00000020	1	MPLS label 3 match range upper value	Page 332

4.13.7.1 ETHERNET_COMPARATOR:EGR2_MPLS_FLOW_CFG:EGR2_MPLS_FLOW_CONTROL

Parent: ETHERNET_COMPARATOR:EGR2_MPLS_FLOW_CFG

Instances: 1

Table 617 • **Fields in EGR2_MPLS_FLOW_CONTROL**

Field Name	Bit	Access	Description	Default
EGR2_MPLS_CHANNEL_MASK	25:24	R/W	Channel Mask 0x0: Flow invalid 0x1: Flow valid for channel 0 0x2: Flow valid for channel 1 0x3: Flow valid for both channels	0x3

Table 617 • **Fields in EGR2_MPLS_FLOW_CONTROL *(continued)***

Field Name	Bit	Access	Description	Default
EGR2_MPLS_STACK_DEPTH	19:16	R/W	Defines the allowable stack depths for searches. The direction that the stack is referenced is determined by the setting of MPLS_REF_PNT. The following table maps bits to stack depths: 0: Stack allowed to be 1 label deep 1: Stack allowed to be 2 labels deep 2: Stack allowed to be 3 labels deep 3: Stack allowed to be 4 labels deep	0x0
EGR2_MPLS_REF_PNT	4	R/W	Defines the search direction for label matching 0: All searching is performed starting from the top of the stack 1: All searching is performed from the end of the stack	0x0
EGR2_MPLS_FLOW_ENA	0	R/W	Flow enable. If this comparator block is not used, all flow enable bits must be set to 0. 0: Flow is disabled 1: Flow is enabled	0x0

4.13.7.2 ETHERNET_COMPARATOR:EGR2_MPLS_FLOW_CFG:EGR2_MPLS_LABEL_RANGE_LOWER_0

Parent: ETHERNET_COMPARATOR:EGR2_MPLS_FLOW_CFG

Instances: 1

Table 618 • **Fields in EGR2_MPLS_LABEL_RANGE_LOWER_0**

Field Name	Bit	Access	Description	Default
EGR2_MPLS_LABEL_RANGE_LOWER_0	19:0	R/W	Lower value for label 0 match range	0x00000

4.13.7.3 ETHERNET_COMPARATOR:EGR2_MPLS_FLOW_CFG:EGR2_MPLS_LABEL_RANGE_UPPER_0

Parent: ETHERNET_COMPARATOR:EGR2_MPLS_FLOW_CFG

Instances: 1

Table 619 • **Fields in EGR2_MPLS_LABEL_RANGE_UPPER_0**

Field Name	Bit	Access	Description	Default
EGR2_MPLS_LABEL_RANGE_UPPER_0	19:0	R/W	Upper value for label 0 match range	0xFFFFF

4.13.7.4 ETHERNET_COMPARATOR:EGR2_MPLS_FLOW_CFG:EGR2_MPLS_LABEL_RANGE_LOWER_1

Parent: ETHERNET_COMPARATOR:EGR2_MPLS_FLOW_CFG

Instances: 1

Table 620 • **Fields in EGR2_MPLS_LABEL_RANGE_LOWER_1**

Field Name	Bit	Access	Description	Default
EGR2_MPLS_LABEL_RANGE_LOWER_1	19:0	R/W	Lower value for label 1 match range	0x00000

4.13.7.5 ETHERNET_COMPARATOR:EGR2_MPLS_FLOW_CFG:EGR2_MPLS_LABEL_RANGE_UPPER_1

Parent: ETHERNET_COMPARATOR:EGR2_MPLS_FLOW_CFG

Instances: 1

Table 621 • **Fields in EGR2_MPLS_LABEL_RANGE_UPPER_1**

Field Name	Bit	Access	Description	Default
EGR2_MPLS_LABEL_RANGE_UPPER_1	19:0	R/W	Upper value for label 1 match range	0xFFFFF

4.13.7.6 ETHERNET_COMPARATOR:EGR2_MPLS_FLOW_CFG:EGR2_MPLS_LABEL_RANGE_LOWER_2

Parent: ETHERNET_COMPARATOR:EGR2_MPLS_FLOW_CFG

Instances: 1

Table 622 • **Fields in EGR2_MPLS_LABEL_RANGE_LOWER_2**

Field Name	Bit	Access	Description	Default
EGR2_MPLS_LABEL_RANGE_LOWER_2	19:0	R/W	Lower value for label 2 match range	0x00000

4.13.7.7 ETHERNET_COMPARATOR:EGR2_MPLS_FLOW_CFG:EGR2_MPLS_LABEL_RANGE_UPPER_2

Parent: ETHERNET_COMPARATOR:EGR2_MPLS_FLOW_CFG

Instances: 1

Table 623 • **Fields in EGR2_MPLS_LABEL_RANGE_UPPER_2**

Field Name	Bit	Access	Description	Default
EGR2_MPLS_LABEL_RANGE_UPPER_2	19:0	R/W	Upper value for label 2 match range	0xFFFFF

4.13.7.8 ETHERNET_COMPARATOR:EGR2_MPLS_FLOW_CFG:EGR2_MPLS_LABEL_RANGE_LOWER_3

Parent: ETHERNET_COMPARATOR:EGR2_MPLS_FLOW_CFG

Instances: 1

Table 624 • **Fields in EGR2_MPLS_LABEL_RANGE_LOWER_3**

Field Name	Bit	Access	Description	Default
EGR2_MPLS_LABEL_RANGE_LOWER_3	19:0	R/W	Lower value for label 3 match range	0x00000

4.13.7.9 ETHERNET_COMPARATOR:EGR2_MPLS_FLOW_CFG:EGR2_MPLS_LABEL_RANGE_UPPER_3

Parent: ETHERNET_COMPARATOR:EGR2_MPLS_FLOW_CFG

Instances: 1

Table 625 • **Fields in EGR2_MPLS_LABEL_RANGE_UPPER_3**

Field Name	Bit	Access	Description	Default
EGR2_MPLS_LABEL_RANGE_UPPER_3	19:0	R/W	Upper value for label 3 match range	0xFFFFF

4.13.8 ETHERNET_COMPARATOR:EGR2_PTP_FLOW

Parent: Egress0 Ethernet Comparator

Instances: 6

Table 626 • **Registers in EGR2_PTP_FLOW**

Register Name	Offset within Register Group	Instances and Address Spacing	Description	Details
EGR2_PTP_FLOW_ENA	0x00000000	1	PTP/OAM flow enable	Page 332
EGR2_PTP_FLOW_MATCH_UPPER	0x00000004	1	Upper half of PTP/OAM flow match field	Page 333
EGR2_PTP_FLOW_MATCH_LOWER	0x00000008	1	Lower half of PTP/OAM flow match field	Page 333
EGR2_PTP_FLOW_MASK_UPPER	0x0000000C	1	Upper half of PTP/OAM flow match mask	Page 333
EGR2_PTP_FLOW_MASK_LOWER	0x00000010	1	Lower half of PTP/OAM flow match mask	Page 334
EGR2_PTP_DOMAIN_RANGE	0x00000014	1	PTP/OAM range match register	Page 334
EGR2_PTP_ACTION	0x00000018	1	PTP action control register	Page 334
EGR2_PTP_ACTION_2	0x0000001C	1	PTP action control register 2	Page 335
EGR2_PTP_ZERO_FIELD_CTL	0x00000020	1	Zero field control register	Page 336

4.13.8.1 ETHERNET_COMPARATOR:EGR2_PTP_FLOW:EGR2_PTP_FLOW_ENA

Parent: ETHERNET_COMPARATOR:EGR2_PTP_FLOW

Instances: 1

Table 627 • **Fields in EGR2_PTP_FLOW_ENA**

Field Name	Bit	Access	Description	Default
EGR2_PTP_NXT_PROT_GRP_MASK	17:16	R/W	Indicates the next protocol groups that this flow is valid for. For each next protocol group, if the bit is 1, then this flow is valid for that group. If it is 0, then it is not valid for the group. 0: Mask bit for next protocol group A 1: Mask bit for next protocol group B	0x3
EGR2_PTP_CHANNEL_MASK	5:4	R/W	Channel mask 0x0: Flow invalid 0x1: Flow valid for channel 0 0x2: Flow valid for channel 1 0x3: Flow valid for both channels	0x3
EGR2_PTP_FLOW_ENA	0	R/W	Flow enable	0x0

4.13.8.2 ETHERNET_COMPARATOR:EGR2_PTP_FLOW:EGR2_PTP_FLOW_MATCH_UPPER

Parent: ETHERNET_COMPARATOR:EGR2_PTP_FLOW

Instances: 1

Table 628 • **Fields in EGR2_PTP_FLOW_MATCH_UPPER**

Field Name	Bit	Access	Description	Default
EGR2_PTP_FLOW_MATCH_UPPER	31:0	R/W		0x00000000

4.13.8.3 ETHERNET_COMPARATOR:EGR2_PTP_FLOW:EGR2_PTP_FLOW_MATCH_LOWER

Parent: ETHERNET_COMPARATOR:EGR2_PTP_FLOW

Instances: 1

Table 629 • **Fields in EGR2_PTP_FLOW_MATCH_LOWER**

Field Name	Bit	Access	Description	Default
EGR2_PTP_FLOW_MATCH_LOWER	31:0	R/W		0x00000000

4.13.8.4 ETHERNET_COMPARATOR:EGR2_PTP_FLOW:EGR2_PTP_FLOW_MASK_UPPER

Parent: ETHERNET_COMPARATOR:EGR2_PTP_FLOW

Instances: 1

Table 630 • **Fields in EGR2_PTP_FLOW_MASK_UPPER**

Field Name	Bit	Access	Description	Default
EGR2_PTP_FLOW_MASK_UPPER	31:0	R/W		0x00000000

4.13.8.5 ETHERNET_COMPARATOR:EGR2_PTP_FLOW:EGR2_PTP_FLOW_MASK_LOWER

Parent: ETHERNET_COMPARATOR:EGR2_PTP_FLOW

Instances: 1

Table 631 • **Fields in EGR2_PTP_FLOW_MASK_LOWER**

Field Name	Bit	Access	Description	Default
EGR2_PTP_FLOW_MASK_LOWER	31:0	R/W		0x00000000

4.13.8.6 ETHERNET_COMPARATOR:EGR2_PTP_FLOW:EGR2_PTP_DOMAIN_RANGE

Parent: ETHERNET_COMPARATOR:EGR2_PTP_FLOW

Instances: 1

Table 632 • **Fields in EGR2_PTP_DOMAIN_RANGE**

Field Name	Bit	Access	Description	Default
EGR2_PTP_DOMAIN_RANGE_OFFSET	28:24	R/W	PTP domain range offset	0x00
EGR2_PTP_DOMAIN_RANGE_UPPER	23:16	R/W	Upper range of PTP domain field to match	0xFF
EGR2_PTP_DOMAIN_RANGE_LOWER	15:8	R/W	Lower range of PTP domain field to match	0x00
EGR2_PTP_DOMAIN_RANGE_ENA	0	R/W	Enable PTP domain range checking	0x0

4.13.8.7 ETHERNET_COMPARATOR:EGR2_PTP_FLOW:EGR2_PTP_ACTION

Parent: ETHERNET_COMPARATOR:EGR2_PTP_FLOW

Instances: 1

Table 633 • **Fields in EGR2_PTP_ACTION**

Field Name	Bit	Access	Description	Default
EGR2_PTP_MOD_FRAME_STAT_UPDATE	28	R/W	0: Do not signal the rewriter to update the value of the Modified Frame Status bit 1: Signal the rewriter to update the value of the Modified Frame Status bit	0x0

Table 633 • **Fields in EGR2_PTP_ACTION *(continued)***

Field Name	Bit	Access	Description	Default
EGR2_PTP_MOD_FRAME_BYTE_OFFSET	26:24	R/W	Indicates the position relative to the start of the PTP frame in bytes where the Modified Frame Status bit resides	0x0
EGR2_PTP_SUB_DELAY_ASYM_ENA	21	R/W	0: Do not signal the timestamp block to subtract the asymmetry delay 1: Signal the timestamp block to subtract the asymmetry delay	0x0
EGR2_PTP_ADD_DELAY_ASYM_ENA	20	R/W	0: Do not signal the timestamp block to add the asymmetry delay 1: Signal the timestamp block to add the asymmetry delay	0x0
EGR2_PTP_TIME_STRG_FIELD_OFFSET	15:10	R/W		0x00
EGR2_PTP_CORR_FIELD_OFFSET	9:5	R/W	Points to the location of the correction field for updating the timestamp. Location is relative to the first byte of the PTP/OAM header. **Note:** If this flow is being used to match OAM frames, set this register to 4	0x00
EGR2_PTP_SAVE_LOCAL_TIME	4	R/W	Save local time to the timestamp FIFO 0: Do not save the time to the timestamp FIFO 1: Save the local time to the timestamp FIFO	0x0
EGR2_PTP_COMMAND	3:0	R/W	0: NOP 1: SUB 2: SUB_P2P 3: ADD 4: SUB_ADD 5: WRITE_1588 6: WRITE_P2P (deprecated) 7: WRITE_NS 8: WRITE_NS_P2P	0x0

4.13.8.8 ETHERNET_COMPARATOR:EGR2_PTP_FLOW:EGR2_PTP_ACTION_2

Parent: ETHERNET_COMPARATOR:EGR2_PTP_FLOW

Instances: 1

Table 634 • **Fields in EGR2_PTP_ACTION_2**

Field Name	Bit	Access	Description	Default
EGR2_PTP_NEW_CF_LOC	23:16	R/W	Location of the new correction field relative to the PTP header start. Only even values are allowed.	0x00

Table 634 • **Fields in EGR2_PTP_ACTION_2 *(continued)***

Field Name	Bit	Access	Description	Default
EGR2_PTP_REWRITE_OFFSET	15:8	R/W	Points to where in the frame relative to the SFD that the timestamp should be updated	0x00
EGR2_PTP_REWRITE_BYTES	3:0	R/W	Number of bytes in the PTP or OAM frame that must be modified by the rewriter for the timestamp	0x0

4.13.8.9 ETHERNET_COMPARATOR:EGR2_PTP_FLOW:EGR2_PTP_ZERO_FIELD_CTL

Parent: ETHERNET_COMPARATOR:EGR2_PTP_FLOW

Instances: 1

Table 635 • **Fields in EGR2_PTP_ZERO_FIELD_CTL**

Field Name	Bit	Access	Description	Default
EGR2_PTP_ZERO_FIELD_OFFSET	13:8	R/W	Points to a location in the PTP/OAM frame relative to the start of the PTP header that will be zeroed if this function is enabled	0x00
EGR2_PTP_ZERO_FIELD_BYTE_CNT	3:0	R/W	The number of bytes to be zeroed. If this field is 0, then this function is not enabled.	0x0

4.14 Ingress2 Ethernet Comparator

Table 636 • **Register Groups in Ingress2 Ethernet Comparator**

Register Group Name	Offset within Target	Instances and Address Spacing	Description	Details
INGR2_ETH1_NXT_PROTOCOL_A	0x00000000	1	Ethernet next protocol configuration	Page 337
INGR2_ETH1_NXT_PROTOCOL_B	0x00000040	1	Ethernet next protocol configuration	Page 338
INGR2_ETH1_FLOW_CFG	0x00000080	8 0x00000040	Ethernet flow configuration	Page 340
INGR2_ETH2_NXT_PROTOCOL_A	0x00000280	1	Ethernet next protocol configuration	Page 344
INGR2_ETH2_FLOW_CFG	0x00000300	8 0x00000040	Ethernet flow configuration	Page 345
INGR2_MPLS_NXT_COMPARATOR_A	0x00000500	1	MPLS next protocol register	Page 348
INGR2_MPLS_FLOW_CFG	0x00000580	8 0x00000040	MPLS flow configuration	Page 349
INGR2_PTP_FLOW	0x00000780	6 0x00000040	PTP flow configuration	Page 353

4.14.1 ETHERNET_COMPARATOR:INGR2_ETH1_NXT_PROTOCOL_A

Parent: Egress0 Ethernet Comparator

Instances: 1

Table 637 • **Registers in INGR2_ETH1_NXT_PROTOCOL_A**

Register Name	Offset within Register Group	Instances and Address Spacing	Description	Details
INGR2_ETH1_NXT_PROTOCOL_A	0x00000000	1	Ethernet next protocol register	Page 337
INGR2_ETH1_VLAN_TPID_CFG_A	0x00000004	1	VLAN TPID configuration	Page 337
INGR2_ETH1_TAG_MODE_A	0x00000008	1	Ethernet tag mode	Page 338
INGR2_ETH1_ETYPE_MATCH_A	0x0000000C	1	Ethertype match register	Page 338

4.14.1.1 ETHERNET_COMPARATOR:INGR2_ETH1_NXT_PROTOCOL_A:INGR2_ETH1_NXT_PROTOCOL_A

Parent: ETHERNET_COMPARATOR:INGR2_ETH1_NXT_PROTOCOL_A

Instances: 1

Table 638 • **Fields in INGR2_ETH1_NXT_PROTOCOL_A**

Field Name	Bit	Access	Description	Default
INGR2_ETH1_NXT_COMPARATOR_A	2:0	R/W	Points to the next comparator block after this Ethernet block 0: Reserved 1: Ethernet comparator 2 2: IP/UDP/ACH comparator 1 3: IP/UDP/ACH comparator 2 4: MPLS comparator 5: PTP/OAM comparator 6,7: Reserved	0x0

4.14.1.2 ETHERNET_COMPARATOR:INGR2_ETH1_NXT_PROTOCOL_A:INGR2_ETH1_VLAN_TPID_CFG_A

Parent: ETHERNET_COMPARATOR:INGR2_ETH1_NXT_PROTOCOL_A

Instances: 1

Table 639 • **Fields in INGR2_ETH1_VLAN_TPID_CFG_A**

Field Name	Bit	Access	Description	Default
INGR2_ETH1_VLAN_TPID_CFG_A	31:16	R/W	Configurable VLAN TPID (S or B-tag)	0x88A8

4.14.1.3 ETHERNET_COMPARATOR:INGR2_ETH1_NXT_PROTOCOL_A:INGR2_ETH1_TAG_MODE_A

Parent: ETHERNET_COMPARATOR:INGR2_ETH1_NXT_PROTOCOL_A

Instances: 1

Table 640 • **Fields in INGR2_ETH1_TAG_MODE_A**

Field Name	Bit	Access	Description	Default
INGR2_ETH1_PBB_ENA_A	0	R/W	This bit enables the presence of PBB. The I-tag match bits are programmed in the ETH1_VLAN_TAG_RANGE registers. The mask bits are programmed in the ETH1_VLAN_TAG2 registers. A B-tag if present is configured in the ETH1_VLAN_TAG1 registers. 0: PBB not enabled 1: Always expect PBB, last tag is always an I-tag	0x0

4.14.1.4 ETHERNET_COMPARATOR:INGR2_ETH1_NXT_PROTOCOL_A:INGR2_ETH1_ETYPE_MATCH_A

Parent: ETHERNET_COMPARATOR:INGR2_ETH1_NXT_PROTOCOL_A

Instances: 1

Table 641 • **Fields in INGR2_ETH1_ETYPE_MATCH_A**

Field Name	Bit	Access	Description	Default
INGR2_ETH1_ETYPE_MATCH_A	15:0	R/W	If the Ethertype/length field is an Ethertype, then this register is compared against the value. If the field is a length, the length value is not checked.	0x0000

4.14.2 ETHERNET_COMPARATOR:INGR2_ETH1_NXT_PROTOCOL_B

Parent: Egress0 Ethernet Comparator

Instances: 1

Table 642 • **Registers in INGR2_ETH1_NXT_PROTOCOL_B**

Register Name	Offset within Register Group	Instances and Address Spacing	Description	Details
INGR2_ETH1_NXT_PROTOCOL_B	0x00000000	1	Ethernet next protocol register	Page 339
INGR2_ETH1_VLAN_TPID_CFG_B	0x00000004	1	VLAN TPID configuration	Page 339
INGR2_ETH1_TAG_MODE_B	0x00000008	1	Ethernet tag mode	Page 339
INGR2_ETH1_ETYPE_MATCH_B	0x0000000C	1	Ethertype match register	Page 340

4.14.2.1 ETHERNET_COMPARATOR:INGR2_ETH1_NXT_PROTOCOL_B:INGR2_ETH1_NXT_PROTOCOL_B

Parent: ETHERNET_COMPARATOR:INGR2_ETH1_NXT_PROTOCOL_B

Instances: 1

Table 643 • **Fields in INGR2_ETH1_NXT_PROTOCOL_B**

Field Name	Bit	Access	Description	Default
INGR2_ETH1_NXT_COMPARATOR_B	2:0	R/W	Points to the next comparator block after this Ethernet block 0: Reserved 1: Ethernet comparator 2 2: IP/UDP/ACH comparator 1 3: IP/UDP/ACH comparator 2 4: MPLS comparator 5: PTP/OAM comparator 6,7: Reserved	0x0

4.14.2.2 ETHERNET_COMPARATOR:INGR2_ETH1_NXT_PROTOCOL_B:INGR2_ETH1_VLAN_TPID_CFG_B

Parent: ETHERNET_COMPARATOR:INGR2_ETH1_NXT_PROTOCOL_B

Instances: 1

Table 644 • **Fields in INGR2_ETH1_VLAN_TPID_CFG_B**

Field Name	Bit	Access	Description	Default
INGR2_ETH1_VLAN_TPID_CFG_B	15:0	R/W	Configurable VLAN TPID (S or B-tag)	0x88A8

4.14.2.3 ETHERNET_COMPARATOR:INGR2_ETH1_NXT_PROTOCOL_B:INGR2_ETH1_TAG_MODE_B

Parent: ETHERNET_COMPARATOR:INGR2_ETH1_NXT_PROTOCOL_B

Instances: 1

Table 645 • **Fields in INGR2_ETH1_TAG_MODE_B**

Field Name	Bit	Access	Description	Default
INGR2_ETH1_PBB_ENA_B	0	R/W	This bit enables the presence of PBB. The I-tag match bits are programmed in the ETH1_VLAN_TAG_RANGE registers. The mask bits are programmed in the ETH1_VLAN_TAG2 registers. A B-tag if present is configured in the ETH1_VLAN_TAG1 registers. 0: PBB not enabled 1: Always expect PBB, last tag is always an I-tag	0x0

4.14.2.4 ETHERNET_COMPARATOR:INGR2_ETH1_NXT_PROTOCOL_B:INGR2_ETH1_ETYPE_MATCH_B

Parent: ETHERNET_COMPARATOR:INGR2_ETH1_NXT_PROTOCOL_B

Instances: 1

Table 646 • **Fields in INGR2_ETH1_ETYPE_MATCH_B**

Field Name	Bit	Access	Description	Default
INGR2_ETH1_ETYPE_MATCH_B	15:0	R/W	If the Ethertype/length field is an Ethertype, then this register is compared against the value. If the field is a length, the length value is not checked.	0x0000

4.14.3 ETHERNET_COMPARATOR:INGR2_ETH1_FLOW_CFG

Parent: Egress0 Ethernet Comparator

Instances: 8

Table 647 • **Registers in INGR2_ETH1_FLOW_CFG**

Register Name	Offset within Register Group	Instances and Address Spacing	Description	Details
INGR2_ETH1_FLOW_ENABLE	0x00000000	1	Ethernet flow enable	Page 340
INGR2_ETH1_MATCH_MODE	0x00000004	1	Ethernet protocol match mode	Page 341
INGR2_ETH1_ADDR_MATCH_1	0x00000008	1	Ethernet address match part 1	Page 342
INGR2_ETH1_ADDR_MATCH_2	0x0000000C	1	Ethernet address match part 2	Page 342
INGR2_ETH1_VLAN_TAG_RANGE_I_TAG	0x00000010	1	Ethernet VLAN tag range match register	Page 343
INGR2_ETH1_VLAN_TAG1	0x00000014	1	VLAN tag 1 match/mask	Page 343
INGR2_ETH1_VLAN_TAG2_I_TAG	0x00000018	1	Match/mask for VLAN tag 2 or I-tag match	Page 343

4.14.3.1 ETHERNET_COMPARATOR:INGR2_ETH1_FLOW_CFG:INGR2_ETH1_FLOW_ENABLE

Parent: ETHERNET_COMPARATOR:INGR2_ETH1_FLOW_CFG

Instances: 1

Table 648 • **Fields in INGR2_ETH1_FLOW_ENABLE**

Field Name	Bit	Access	Description	Default
INGR2_ETH1_NXT_PROT_GRP_SEL	16	R/W	Indicates which next-protocol configuration group is valid with this flow 0: Associate this flow with next-protocol group A 1: Associate this flow with next-protocol group B	0x0
INGR2_ETH1_CHANNEL_MASK	9:8	R/W	Channel mask 0x0: Flow invalid 0x1: Flow valid for channel 0 0x2: Flow valid for channel 1 0x3: Flow valid for both channels	0x3
INGR2_ETH1_FLOW_ENABLE	0	R/W	Flow enable 0: Flow disabled 1: Flow enabled	0x0

4.14.3.2 ETHERNET_COMPARATOR:INGR2_ETH1_FLOW_CFG:INGR2_ETH1_MATCH_MODE

Parent: ETHERNET_COMPARATOR:INGR2_ETH1_FLOW_CFG

Instances: 1

Table 649 • **Fields in INGR2_ETH1_MATCH_MODE**

Field Name	Bit	Access	Description	Default
INGR2_ETH1_VLAN_TAG_MODE	13:12	R/W	0: VLAN range checking disabled 1: VLAN range checking on tag 1 2: VLAN range checking on tag 2 (not supported with PBB) 3: Reserved	0x0
INGR2_ETH1_VLAN_TAG2_TYPE	9	R/W	This register is only used if ETH1_VLAN_VERIFY_ENA = 1 If PBB not enabled: 0: C tag (TPID of 0x8100) 1: S tag (match to CONF_VLAN_TPID) If PBB enabled: 0,1: I tag (use range registers)	0x1
INGR2_ETH1_VLAN_TAG1_TYPE	8	R/W	This register is only used if ETH1_VLAN_VERIFY_ENA = 1 0: C tag (TPID of 0x8100) 1: S or B tag (match to CONF_VLAN_TPID)	0x0

Table 649 • **Fields in INGR2_ETH1_MATCH_MODE *(continued)***

Field Name	Bit	Access	Description	Default
INGR2_ETH1_VLAN_TAGS	7:6	R/W	This register is only used if ETH1_VLAN_VERIFY_ENA = 1 0: No VLAN tags (not valid for PBB) 1: 1 VLAN tag (for PBB this would be the I-tag) 2: 2 VLAN tags (for PBB expect a B-tag and an I-tag) 3: Reserved	0x0
INGR2_ETH1_VLAN_VERIFY_ENA	4	R/W	0: Parse for VLAN tags; do not check values. For PBB the I-tag is always checked. 1: Verify configured VLAN tag configuration.	0x0
INGR2_ETH1_ETHERTYPE_MODE	0	R/W	When checking for presence of SNAP/LLC based upon ETH1_MATCH_MODE, this field indicates if SNAP and 3-byte LLC is expected to be present. 0: Only Ethernet type II supported, no SNAP/LLC 1: Ethernet type II and Ethernet type I with SNAP/LLC, determine if SNAP/LLC is present or not. Type I always assumes that SNAP/LLC is present.	0x0

4.14.3.3 ETHERNET_COMPARATOR:INGR2_ETH1_FLOW_CFG:INGR2_ETH1_ADDR_MATCH_1

Parent: ETHERNET_COMPARATOR:INGR2_ETH1_FLOW_CFG

Instances: 1

Table 650 • **Fields in INGR2_ETH1_ADDR_MATCH_1**

Field Name	Bit	Access	Description	Default
INGR2_ETH1_ADDR_MATCH_1	31:0	R/W	First 32 bits of the address match value	0x00000000

4.14.3.4 ETHERNET_COMPARATOR:INGR2_ETH1_FLOW_CFG:INGR2_ETH1_ADDR_MATCH_2

Parent: ETHERNET_COMPARATOR:INGR2_ETH1_FLOW_CFG

Instances: 1

Table 651 • **Fields in INGR2_ETH1_ADDR_MATCH_2**

Field Name	Bit	Access	Description	Default
INGR2_ETH1_ADDR_MATCH_MODE	22:20	R/W	Selects how the addresses are matched. One-hot encoded. Multiple bits can be set at once. 0: Full 48-bit address match 1: Match any unicast address 2: Match any mulitcast address	0x1

Table 651 • **Fields in INGR2_ETH1_ADDR_MATCH_2 *(continued)***

Field Name	Bit	Access	Description	Default
INGR2_ETH1_ADDR_MATCH_SELECT	17:16	R/W	Selects which address to match 0: Match the destination address 1: Match the source address 2: Match either the source of destination address 3: Reserved	0x0
INGR2_ETH1_ADDR_MATCH_2	15:0	R/W	Last 16 bits of the Ethernet address match field	0x0000

4.14.3.5 ETHERNET_COMPARATOR:INGR2_ETH1_FLOW_CFG:INGR2_ETH1_VLAN_TAG_RANGE_I_TAG

Parent: ETHERNET_COMPARATOR:INGR2_ETH1_FLOW_CFG

Instances: 1

Table 652 • **Fields in INGR2_ETH1_VLAN_TAG_RANGE_I_TAG**

Field Name	Bit	Access	Description	Default
INGR2_ETH1_VLAN_TAG_RANGE_UPPER	27:16	R/W	If PBB mode is not enabled, then this register contains the upper range of the VLAN tag range match. If PBB mode is enabled, then this register contains the upper 12 bits of the I-tag.	0xFFF
INGR2_ETH1_VLAN_TAG_RANGE_LOWER	11:0	R/W	If PBB mode is not enabled, then this register contains the lower range of the VLAN tag range match. If PBB mode is enabled, then this register contains the lower 12 bits of the I-tag.	0x000

4.14.3.6 ETHERNET_COMPARATOR:INGR2_ETH1_FLOW_CFG:INGR2_ETH1_VLAN_TAG1

Parent: ETHERNET_COMPARATOR:INGR2_ETH1_FLOW_CFG

Instances: 1

Table 653 • **Fields in INGR2_ETH1_VLAN_TAG1**

Field Name	Bit	Access	Description	Default
INGR2_ETH1_VLAN_TAG1_MASK	27:16	R/W	Mask value for VLAN tag 1	0xFFF
INGR2_ETH1_VLAN_TAG1_MATCH	11:0	R/W	Match value for the first VLAN tag	0x000

4.14.3.7 ETHERNET_COMPARATOR:INGR2_ETH1_FLOW_CFG:INGR2_ETH1_VLAN_TAG2_I_TAG

Parent: ETHERNET_COMPARATOR:INGR2_ETH1_FLOW_CFG

Instances: 1

Table 654 • **Fields in INGR2_ETH1_VLAN_TAG2_I_TAG**

Field Name	Bit	Access	Description	Default
INGR2_ETH1_VLAN_TAG2_MASK	27:16	R/W	When PBB is not enabled, the mask field for VLAN tag 2 When PBB is enabled, the upper 12 bits of the I-tag mask	0xFFF
INGR2_ETH1_VLAN_TAG2_MATCH	11:0	R/W	When PBB is not enabled, the match field for VLAN Tag 2 When PBB is enabled, the lower 12 bits of the I-tag mask field	0x000

4.14.4 ETHERNET_COMPARATOR:INGR2_ETH2_NXT_PROTOCOL_A

Parent: Egress0 Ethernet Comparator

Instances: 1

Table 655 • **Registers in INGR2_ETH2_NXT_PROTOCOL_A**

Register Name	Offset within Register Group	Instances and Address Spacing	Description	Details
INGR2_ETH2_NXT_PROTOCOL_A	0x00000000	1	Ethernet next protocol register	Page 344
INGR2_ETH2_VLAN_TPID_CFG_A	0x00000004	1	VLAN TPID configuration	Page 345
INGR2_ETH2_ETYPE_MATCH_A	0x00000008	1	Ethertype match register	Page 345

4.14.4.1 ETHERNET_COMPARATOR:INGR2_ETH2_NXT_PROTOCOL_A:INGR2_ETH2_NXT_PROTOCOL_A

Parent: ETHERNET_COMPARATOR:INGR2_ETH2_NXT_PROTOCOL_A

Instances: 1

Table 656 • **Fields in INGR2_ETH2_NXT_PROTOCOL_A**

Field Name	Bit	Access	Description	Default
INGR2_ETH2_NXT_COMPARATOR_A	2:0	R/W	Points to the next comparator block after this Ethernet block. If this comparator block is not used, this field must be set to 0. 0: Comparator block not used 1: Ethernet comparator 2 2: IP/UDP/ACH comparator 1 3: IP/UDP/ACH comparator 2 4: MPLS comparator 5: PTP/OAM comparator 6,7: Reserved	0x0

4.14.4.2 ETHERNET_COMPARATOR:INGR2_ETH2_NXT_PROTOCOL_A:INGR2_ETH2_VLAN_TPID_CFG_A

Parent: ETHERNET_COMPARATOR:INGR2_ETH2_NXT_PROTOCOL_A

Instances: 1

Table 657 • **Fields in INGR2_ETH2_VLAN_TPID_CFG_A**

Field Name	Bit	Access	Description	Default
INGR2_ETH2_VLAN_TPID_CFG_A	31:16	R/W	Configurable S-tag TPID	0x88A8

4.14.4.3 ETHERNET_COMPARATOR:INGR2_ETH2_NXT_PROTOCOL_A:INGR2_ETH2_ETYPE_MATCH_A

Parent: ETHERNET_COMPARATOR:INGR2_ETH2_NXT_PROTOCOL_A

Instances: 1

Table 658 • **Fields in INGR2_ETH2_ETYPE_MATCH_A**

Field Name	Bit	Access	Description	Default
INGR2_ETH2_ETYPE_MATCH_A	15:0	R/W	If the Ethertype/length field is an Ethertype, then this register is compared against the value. If the field is a length, the length value is not checked.	0x0000

4.14.5 ETHERNET_COMPARATOR:INGR2_ETH2_FLOW_CFG

Parent: Egress0 Ethernet Comparator

Instances: 8

Table 659 • **Registers in INGR2_ETH2_FLOW_CFG**

Register Name	Offset within Register Group	Instances and Address Spacing	Description	Details
INGR2_ETH2_FLOW_ENABLE	0x00000000	1	Ethernet flow enable	Page 346
INGR2_ETH2_MATCH_MODE	0x00000004	1	Ethernet protocol match mode	Page 346
INGR2_ETH2_ADDR_MATCH_1	0x00000008	1	Ethernet address match part 1	Page 347
INGR2_ETH2_ADDR_MATCH_2	0x0000000C	1	Ethernet address match part 2	Page 347
INGR2_ETH2_VLAN_TAG_RANGE_I_TAG	0x00000010	1	Ethernet VLAN tag range match register	Page 348
INGR2_ETH2_VLAN_TAG1	0x00000014	1	VLAN tag 1 match/mask	Page 348
INGR2_ETH2_VLAN_TAG2_I_TAG	0x00000018	1	Match/mask for VLAN tag 2 or I-tag match	Page 348

4.14.5.1 ETHERNET_COMPARATOR:INGR2_ETH2_FLOW_CFG:INGR2_ETH2_FLOW_ENABLE

Parent: ETHERNET_COMPARATOR:INGR2_ETH2_FLOW_CFG

Instances: 1

Table 660 • **Fields in INGR2_ETH2_FLOW_ENABLE**

Field Name	Bit	Access	Description	Default
INGR2_ETH2_CHANNEL_MASK	9:8	R/W	Channel mask 0x0: Flow invalid 0x1: Flow valid for channel 0 0x2: Flow valid for channel 1 0x3: Flow valid for both channels	0x3
INGR2_ETH2_FLOW_ENABLE	0	R/W	Flow enable. If this comparator block is not used, all flow enable bits must be set to 0. 0: Flow disabled 1: Flow enabled	0x0

4.14.5.2 ETHERNET_COMPARATOR:INGR2_ETH2_FLOW_CFG:INGR2_ETH2_MATCH_MODE

Parent: ETHERNET_COMPARATOR:INGR2_ETH2_FLOW_CFG

Instances: 1

Table 661 • **Fields in INGR2_ETH2_MATCH_MODE**

Field Name	Bit	Access	Description	Default
INGR2_ETH2_VLAN_TAG_MODE	13:12	R/W	0: VLAN range checking disabled 1: VLAN range checking on tag 1 2: VLAN range checking on tag 2 (not supported with PBB) 3: Reserved	0x0
INGR2_ETH2_VLAN_TAG2_TYPE	9	R/W	This register is only used if ETH1_VLAN_VERIFY_ENA = 1 0: C tag (TPID of 0x8100) 1: S tag (match to CONF_VLAN_TPID)	0x1
INGR2_ETH2_VLAN_TAG1_TYPE	8	R/W	This register is only used if ETH1_VLAN_VERIFY_ENA = 1 0: C tag (TPID of 0x8100) 1: S or B tag (match to CONF_VLAN_TPID)	0x0
INGR2_ETH2_VLAN_TAGS	7:6	R/W	This register is only used if ETH2_VLAN_VERIFY_ENA = 1 0: No VLAN tags 1: 1 VLAN tag 2: 2 VLAN tags 3: Reserved	0x0

Table 661 • **Fields in INGR2_ETH2_MATCH_MODE *(continued)***

Field Name	Bit	Access	Description	Default
INGR2_ETH2_VLAN_VERIFY_ENA	4	R/W	0: Parse for VLAN tags, do not check values. 1: Verify configured VLAN tag configuration.	0x0
INGR2_ETH2_ETHERTYPE_MODE	0	R/W	When checking for presence of SNAP/LLC based upon ETH1_MATCH_MODE, this field indicates if SNAP and 3-byte LLC is expected to be present. 0: Only Ethernet type II supported, no SNAP/LLC 1: Ethernet type II and Ethernet type I with SNAP/LLC, determine if SNAP/LLC is present. Type I always assumes that SNAP/LLC is present	0x0

4.14.5.3 ETHERNET_COMPARATOR:INGR2_ETH2_FLOW_CFG:INGR2_ETH2_ADDR_MATCH_1

Parent: ETHERNET_COMPARATOR:INGR2_ETH2_FLOW_CFG

Instances: 1

Table 662 • **Fields in INGR2_ETH2_ADDR_MATCH_1**

Field Name	Bit	Access	Description	Default
INGR2_ETH2_ADDR_MATCH_1	31:0	R/W	First 32 bits of the address match value	0x00000000

4.14.5.4 ETHERNET_COMPARATOR:INGR2_ETH2_FLOW_CFG:INGR2_ETH2_ADDR_MATCH_2

Parent: ETHERNET_COMPARATOR:INGR2_ETH2_FLOW_CFG

Instances: 1

Table 663 • **Fields in INGR2_ETH2_ADDR_MATCH_2**

Field Name	Bit	Access	Description	Default
INGR2_ETH2_ADDR_MATCH_MODE	22:20	R/W	Selects how the addresses are matched. One-hot encoded. Multiple bits can be set at once. 0: Full 48-bit address match 1: Match any unicast address 2: Match any mulitcast address	0x1
INGR2_ETH2_ADDR_MATCH_SELECT	17:16	R/W	Selects which address to match 0: Match the destination address 1: Match the source address 2: Match either the source of destination address 3: Reserved	0x0
INGR2_ETH2_ADDR_MATCH_2	15:0	R/W	Last 16 bits of the Ethernet address match field	0x0000

4.14.5.5 ETHERNET_COMPARATOR:INGR2_ETH2_FLOW_CFG:INGR2_ETH2_VLAN_TAG_RANGE_I_TAG

Parent: ETHERNET_COMPARATOR:INGR2_ETH2_FLOW_CFG

Instances: 1

Table 664 • **Fields in INGR2_ETH2_VLAN_TAG_RANGE_I_TAG**

Field Name	Bit	Access	Description	Default
INGR2_ETH2_VLAN_TAG_RANGE_UPPER	27:16	R/W	Contains the upper range of the VLAN tag range match	0xFFF
INGR2_ETH2_VLAN_TAG_RANGE_LOWER	11:0	R/W	Contains the lower range of the VLAN tag range match	0x000

4.14.5.6 ETHERNET_COMPARATOR:INGR2_ETH2_FLOW_CFG:INGR2_ETH2_VLAN_TAG1

Parent: ETHERNET_COMPARATOR:INGR2_ETH2_FLOW_CFG

Instances: 1

Table 665 • **Fields in INGR2_ETH2_VLAN_TAG1**

Field Name	Bit	Access	Description	Default
INGR2_ETH2_VLAN_TAG1_MASK	27:16	R/W	Mask value for VLAN tag 1	0xFFF
INGR2_ETH2_VLAN_TAG1_MATCH	11:0	R/W	Match value for the first VLAN tag	0x000

4.14.5.7 ETHERNET_COMPARATOR:INGR2_ETH2_FLOW_CFG:INGR2_ETH2_VLAN_TAG2_I_TAG

Parent: ETHERNET_COMPARATOR:INGR2_ETH2_FLOW_CFG

Instances: 1

Table 666 • **Fields in INGR2_ETH2_VLAN_TAG2_I_TAG**

Field Name	Bit	Access	Description	Default
INGR2_ETH2_VLAN_TAG2_MASK	27:16	R/W	Mask field for VLAN tag 2	0xFFF
INGR2_ETH2_VLAN_TAG2_MATCH	11:0	R/W	Match field for VLAN Tag 2	0x000

4.14.6 ETHERNET_COMPARATOR:INGR2_MPLS_NXT_COMPARATOR_A

Parent: Egress0 Ethernet Comparator

Instances: 1

Table 667 • **Registers in INGR2_MPLS_NXT_COMPARATOR_A**

Register Name	Offset within Register Group	Instances and Address Spacing	Description	Details
INGR2_MPLS_NXT_COMPARATOR_A	0x00000000	1	MPLS next protocol comparator register	Page 349

4.14.6.1 ETHERNET_COMPARATOR:INGR2_MPLS_NXT_COMPARATOR_A:INGR2_MPLS_NXT_COMPARATOR_A

Parent: ETHERNET_COMPARATOR:INGR2_MPLS_NXT_COMPARATOR_A

Instances: 1

Table 668 • **Fields in INGR2_MPLS_NXT_COMPARATOR_A**

Field Name	Bit	Access	Description	Default
INGR2_MPLS_CTL_WORD_A	16	R/W	Indicates the presence of a control word after the last label 0: No control ward after the last label 1: Control word after the last label	0x0
INGR2_MPLS_NXT_COMPARATOR_A	2:0	R/W	Points to the next comparator stage. If this comparator block is not used, this field must be set to 0. 0: Comparator block not used 1: Ethernet comparator 2 2: IP/UDP/ACH comparator 1 3: IP/UDP/ACH comparator 2 4: Reserved 5: PTP/OAM comparator 6,7: Reserved	0x0

4.14.7 ETHERNET_COMPARATOR:INGR2_MPLS_FLOW_CFG

Parent: Egress0 Ethernet Comparator

Instances: 8

Table 669 • **Registers in INGR2_MPLS_FLOW_CFG**

Register Name	Offset within Register Group	Instances and Address Spacing	Description	Details
INGR2_MPLS_FLOW_CONTROL	0x00000000	1	MPLS flow control register	Page 350
INGR2_MPLS_LABEL_RANGE_LOWER_0	0x00000004	1	MPLS label 0 match range lower value	Page 351
INGR2_MPLS_LABEL_RANGE_UPPER_0	0x00000008	1	MPLS label 0 match range upper value	Page 351
INGR2_MPLS_LABEL_RANGE_LOWER_1	0x0000000C	1	MPLS label 1 match range lower value	Page 351

Table 669 • **Registers in INGR2_MPLS_FLOW_CFG *(continued)***

Register Name	Offset within Register Group	Instances and Address Spacing	Description	Details
INGR2_MPLS_LABEL_RANGE_UPPER_1	0x00000010	1	MPLS label 1 match range upper value	Page 351
INGR2_MPLS_LABEL_RANGE_LOWER_2	0x00000014	1	MPLS label 2 match range lower value	Page 352
INGR2_MPLS_LABEL_RANGE_UPPER_2	0x00000018	1	MPLS label 2 match range upper value	Page 352
INGR2_MPLS_LABEL_RANGE_LOWER_3	0x0000001C	1	MPLS label 3 match range lower value	Page 352
INGR2_MPLS_LABEL_RANGE_UPPER_3	0x00000020	1	MPLS label 3 match range upper value	Page 352

4.14.7.1 ETHERNET_COMPARATOR:INGR2_MPLS_FLOW_CFG:INGR2_MPLS_FLOW_CONTROL

Parent: ETHERNET_COMPARATOR:INGR2_MPLS_FLOW_CFG

Instances: 1

Table 670 • **Fields in INGR2_MPLS_FLOW_CONTROL**

Field Name	Bit	Access	Description	Default
INGR2_MPLS_CHANNEL_MASK	25:24	R/W	Channel Mask 0x0: Flow invalid 0x1: Flow valid for channel 0 0x2: Flow valid for channel 1 0x3: Flow valid for both channels	0x3
INGR2_MPLS_STACK_DEPTH	19:16	R/W	Defines the allowable stack depths for searches. The direction that the stack is referenced is determined by the setting of MPLS_REF_PNT. The following table maps bits to stack depths: 0: Stack allowed to be 1 label deep 1: Stack allowed to be 2 labels deep 2: Stack allowed to be 3 labels deep 3: Stack allowed to be 4 labels deep	0x0
INGR2_MPLS_REF_PNT	4	R/W	Defines the search direction for label matching 0: All searching is performed starting from the top of the stack 1: All searching is performed from the end of the stack	0x0
INGR2_MPLS_FLOW_ENA	0	R/W	Flow enable. If this comparator block is not used, all flow enable bits must be set to 0. 0: Flow is disabled 1: Flow is enabled	0x0

4.14.7.2 ETHERNET_COMPARATOR:INGR2_MPLS_FLOW_CFG:INGR2_MPLS_LABEL_RANGE_LOWER_0

Parent: ETHERNET_COMPARATOR:INGR2_MPLS_FLOW_CFG

Instances: 1

Table 671 • **Fields in INGR2_MPLS_LABEL_RANGE_LOWER_0**

Field Name	Bit	Access	Description	Default
INGR2_MPLS_LABEL_RANGE_LOWER_0	19:0	R/W	Lower value for label 0 match range	0x00000

4.14.7.3 ETHERNET_COMPARATOR:INGR2_MPLS_FLOW_CFG:INGR2_MPLS_LABEL_RANGE_UPPER_0

Parent: ETHERNET_COMPARATOR:INGR2_MPLS_FLOW_CFG

Instances: 1

Table 672 • **Fields in INGR2_MPLS_LABEL_RANGE_UPPER_0**

Field Name	Bit	Access	Description	Default
INGR2_MPLS_LABEL_RANGE_UPPER_0	19:0	R/W	Upper value for label 0 match range	0xFFFFF

4.14.7.4 ETHERNET_COMPARATOR:INGR2_MPLS_FLOW_CFG:INGR2_MPLS_LABEL_RANGE_LOWER_1

Parent: ETHERNET_COMPARATOR:INGR2_MPLS_FLOW_CFG

Instances: 1

Table 673 • **Fields in INGR2_MPLS_LABEL_RANGE_LOWER_1**

Field Name	Bit	Access	Description	Default
INGR2_MPLS_LABEL_RANGE_LOWER_1	19:0	R/W	Lower value for label 1 match range	0x00000

4.14.7.5 ETHERNET_COMPARATOR:INGR2_MPLS_FLOW_CFG:INGR2_MPLS_LABEL_RANGE_UPPER_1

Parent: ETHERNET_COMPARATOR:INGR2_MPLS_FLOW_CFG

Instances: 1

Table 674 • **Fields in INGR2_MPLS_LABEL_RANGE_UPPER_1**

Field Name	Bit	Access	Description	Default
INGR2_MPLS_LABEL_RANGE_UPPER_1	19:0	R/W	Upper value for label 1 match range	0xFFFFF

4.14.7.6 ETHERNET_COMPARATOR:INGR2_MPLS_FLOW_CFG:INGR2_MPLS_LABEL_RANGE_LOWER_2

Parent: ETHERNET_COMPARATOR:INGR2_MPLS_FLOW_CFG

Instances: 1

Table 675 • **Fields in INGR2_MPLS_LABEL_RANGE_LOWER_2**

Field Name	Bit	Access	Description	Default
INGR2_MPLS_LABEL_RANGE_LOWER_2	19:0	R/W	Lower value for label 2 match range	0x00000

4.14.7.7 ETHERNET_COMPARATOR:INGR2_MPLS_FLOW_CFG:INGR2_MPLS_LABEL_RANGE_UPPER_2

Parent: ETHERNET_COMPARATOR:INGR2_MPLS_FLOW_CFG

Instances: 1

Table 676 • **Fields in INGR2_MPLS_LABEL_RANGE_UPPER_2**

Field Name	Bit	Access	Description	Default
INGR2_MPLS_LABEL_RANGE_UPPER_2	19:0	R/W	Upper value for label 2 match range	0xFFFFF

4.14.7.8 ETHERNET_COMPARATOR:INGR2_MPLS_FLOW_CFG:INGR2_MPLS_LABEL_RANGE_LOWER_3

Parent: ETHERNET_COMPARATOR:INGR2_MPLS_FLOW_CFG

Instances: 1

Table 677 • **Fields in INGR2_MPLS_LABEL_RANGE_LOWER_3**

Field Name	Bit	Access	Description	Default
INGR2_MPLS_LABEL_RANGE_LOWER_3	19:0	R/W	Lower value for label 3 match range	0x00000

4.14.7.9 ETHERNET_COMPARATOR:INGR2_MPLS_FLOW_CFG:INGR2_MPLS_LABEL_RANGE_UPPER_3

Parent: ETHERNET_COMPARATOR:INGR2_MPLS_FLOW_CFG

Instances: 1

Table 678 • **Fields in INGR2_MPLS_LABEL_RANGE_UPPER_3**

Field Name	Bit	Access	Description	Default
INGR2_MPLS_LABEL_RANGE_UPPER_3	19:0	R/W	Upper value for label 3 match range	0xFFFFF

4.14.8 ETHERNET_COMPARATOR:INGR2_PTP_FLOW

Parent: Egress0 Ethernet Comparator

Instances: 6

Table 679 • **Registers in INGR2_PTP_FLOW**

Register Name	Offset within Register Group	Instances and Address Spacing	Description	Details
INGR2_PTP_FLOW_ENA	0x00000000	1	PTP/OAM flow enable	Page 353
INGR2_PTP_FLOW_MATCH_UPPER	0x00000004	1	Upper half of PTP/OAM flow match field	Page 354
INGR2_PTP_FLOW_MATCH_LOWER	0x00000008	1	Lower half of PTP/OAM flow match field	Page 354
INGR2_PTP_FLOW_MASK_UPPER	0x0000000C	1	Upper half of PTP/OAM flow match mask	Page 354
INGR2_PTP_FLOW_MASK_LOWER	0x00000010	1	Lower half of PTP/OAM flow match mask	Page 354
INGR2_PTP_DOMAIN_RANGE	0x00000014	1	PTP/OAM range match register	Page 355
INGR2_PTP_ACTION	0x00000018	1	PTP action control register	Page 355
INGR2_PTP_ACTION_2	0x0000001C	1	PTP action control register 2	Page 356
INGR2_PTP_ZERO_FIELD_CTL	0x00000020	1	Zero field control register	Page 356

4.14.8.1 ETHERNET_COMPARATOR:INGR2_PTP_FLOW:INGR2_PTP_FLOW_ENA

Parent: ETHERNET_COMPARATOR:INGR2_PTP_FLOW

Instances: 1

Table 680 • **Fields in INGR2_PTP_FLOW_ENA**

Field Name	Bit	Access	Description	Default
INGR2_PTP_NXT_PROT_GRP_MASK	17:16	R/W	Indicates the next protocol groups that this flow is valid for. For each next protocol group, if the bit is 1, then this flow is valid for that group. If it is 0, then it is not valid for the group. 0: Mask bit for next protocol group A 1: Mask bit for next protocol group B	0x3
INGR2_PTP_CHANNEL_MASK	5:4	R/W	Channel mask 0x0: Flow invalid 0x1: Flow valid for channel 0 0x2: Flow valid for channel 1 0x3: Flow valid for both channels	0x3
INGR2_PTP_FLOW_ENA	0	R/W	Flow enable	0x0

4.14.8.2 ETHERNET_COMPARATOR:INGR2_PTP_FLOW:INGR2_PTP_FLOW_MATCH_UPPER

Parent: ETHERNET_COMPARATOR:INGR2_PTP_FLOW

Instances: 1

Table 681 • **Fields in INGR2_PTP_FLOW_MATCH_UPPER**

Field Name	Bit	Access	Description	Default
INGR2_PTP_FLOW_MATCH_UPPER	31:0	R/W		0x00000000

4.14.8.3 ETHERNET_COMPARATOR:INGR2_PTP_FLOW:INGR2_PTP_FLOW_MATCH_LOWER

Parent: ETHERNET_COMPARATOR:INGR2_PTP_FLOW

Instances: 1

Table 682 • **Fields in INGR2_PTP_FLOW_MATCH_LOWER**

Field Name	Bit	Access	Description	Default
INGR2_PTP_FLOW_MATCH_LOWER	31:0	R/W		0x00000000

4.14.8.4 ETHERNET_COMPARATOR:INGR2_PTP_FLOW:INGR2_PTP_FLOW_MASK_UPPER

Parent: ETHERNET_COMPARATOR:INGR2_PTP_FLOW

Instances: 1

Table 683 • **Fields in INGR2_PTP_FLOW_MASK_UPPER**

Field Name	Bit	Access	Description	Default
INGR2_PTP_FLOW_MASK_UPPER	31:0	R/W		0x00000000

4.14.8.5 ETHERNET_COMPARATOR:INGR2_PTP_FLOW:INGR2_PTP_FLOW_MASK_LOWER

Parent: ETHERNET_COMPARATOR:INGR2_PTP_FLOW

Instances: 1

Table 684 • **Fields in INGR2_PTP_FLOW_MASK_LOWER**

Field Name	Bit	Access	Description	Default
INGR2_PTP_FLOW_MASK_LOWER	31:0	R/W		0x00000000

4.14.8.6 ETHERNET_COMPARATOR:INGR2_PTP_FLOW:INGR2_PTP_DOMAIN_RANGE

Parent: ETHERNET_COMPARATOR:INGR2_PTP_FLOW

Instances: 1

Table 685 • **Fields in INGR2_PTP_DOMAIN_RANGE**

Field Name	Bit	Access	Description	Default
INGR2_PTP_DOMAIN_RANGE_OFFSET	28:24	R/W	PTP domain range offset	0x00
INGR2_PTP_DOMAIN_RANGE_UPPER	23:16	R/W	Upper range of PTP domain field to match	0xFF
INGR2_PTP_DOMAIN_RANGE_LOWER	15:8	R/W	Lower range of PTP domain field to match	0x00
INGR2_PTP_DOMAIN_RANGE_ENA	0	R/W	Enable PTP domain range checking	0x0

4.14.8.7 ETHERNET_COMPARATOR:INGR2_PTP_FLOW:INGR2_PTP_ACTION

Parent: ETHERNET_COMPARATOR:INGR2_PTP_FLOW

Instances: 1

Table 686 • **Fields in INGR2_PTP_ACTION**

Field Name	Bit	Access	Description	Default
INGR2_PTP_MOD_FRAME_STAT_UPDATE	28	R/W	0: Do not signal the rewriter to update the value of the Modified Frame Status bit 1: Signal the rewriter to update the value of the Modified Frame Status bit	0x0
INGR2_PTP_MOD_FRAME_BYTE_OFFSET	26:24	R/W	Indicates the position relative to the start of the PTP frame in bytes where the Modified Frame Status bit resides	0x0
INGR2_PTP_SUB_DELAY_ASYM_ENA	21	R/W	0: Do not signal the timestamp block to subtract the asymmetry delay 1: Signal the timestamp block to subtract the asymmetry delay	0x0
INGR2_PTP_ADD_DELAY_ASYM_ENA	20	R/W	0: Do not signal the timestamp block to add the asymmetry delay 1: Signal the timestamp block to add the asymmetry delay	0x0
INGR2_PTP_TIME_STRG_FIELD_OFFSET	15:10	R/W		0x00

Table 686 • **Fields in INGR2_PTP_ACTION *(continued)***

Field Name	Bit	Access	Description	Default
INGR2_PTP_CORR_FIELD_OFFSET	9:5	R/W	Points to the location of the correction field for updating the timestamp. Location is relative to the first byte of the PTP/OAM header. **Note:** If this flow is being used to match OAM frames, set this register to 4	0x00
INGR2_PTP_SAVE_LOCAL_TIME	4	R/W	Save local time to the timestamp FIFO 0: Do not save the time to the timestamp FIFO 1: Save the local time to the timestamp FIFO	0x0
INGR2_PTP_COMMAND	3:0	R/W	0: NOP 1: SUB 2: SUB_P2P 3: ADD 4: SUB_ADD 5: WRITE_1588 6: WRITE_P2P (deprecated) 7: WRITE_NS 8: WRITE_NS_P2P	0x0

4.14.8.8 ETHERNET_COMPARATOR:INGR2_PTP_FLOW:INGR2_PTP_ACTION_2

Parent: ETHERNET_COMPARATOR:INGR2_PTP_FLOW

Instances: 1

Table 687 • **Fields in INGR2_PTP_ACTION_2**

Field Name	Bit	Access	Description	Default
INGR2_PTP_NEW_CF_LOC	23:16	R/W	Location of the new correction field relative to the PTP header start. Only even values are allowed.	0x00
INGR2_PTP_REWRITE_OFFSET	15:8	R/W	Points to where in the frame relative to the SFD that the timestamp should be updated	0x00
INGR2_PTP_REWRITE_BYTES	3:0	R/W	Number of bytes in the PTP or OAM frame that must be modified by the rewriter for the timestamp	0x0

4.14.8.9 ETHERNET_COMPARATOR:INGR2_PTP_FLOW:INGR2_PTP_ZERO_FIELD_CTL

Parent: ETHERNET_COMPARATOR:INGR2_PTP_FLOW

Instances: 1

Table 688 • **Fields in INGR2_PTP_ZERO_FIELD_CTL**

Field Name	Bit	Access	Description	Default
INGR2_PTP_ZERO_FIELD_OFFSET	13:8	R/W	Points to a location in the PTP/OAM frame relative to the start of the PTP header that will be zeroed if this function is enabled	0x00
INGR2_PTP_ZERO_FIELD_BYTE_CNT	3:0	R/W	The number of bytes to be zeroed. If this field is 0, then this function is not enabled.	0x0

5 Electrical Specifications

This section provides the DC characteristics, AC characteristics, recommended operating conditions, and stress ratings for the VSC8574-01 device.

5.1 DC Characteristics

This section contains the DC specifications for the VSC8574-01 device.

5.1.1 VDD25

The following table shows the DC specifications for the pins referenced to VDD25. The specifications listed in the following table are valid only when V_{DD1} = 1.0 V, V_{DD1A} = 1.0 V, or V_{DD25A} = 2.5 V.

Table 689 • **VDD25 DC Characteristics**

Parameter	Symbol	Minimum	Maximum	Unit	Condition
Output high voltage	V_{OH}	2.0	2.8	V	IOH = –1.0 mA
Output low voltage	V_{OL}	–0.3	0.4	V	IOL = 1.0 mA
Input high voltage	V_{IH}	1.85	3.3	V	
Input low voltage	V_{IL}	–0.3	0.7	V	
Input leakage current	I_{ILEAK}	–32	32	µA	Internal resistor included
Output leakage current	I_{OLEAK}	–32	32	µA	Internal resistor included
Output low current drive strength	I_{OL}		6	mA	
Output high current drive strength	I_{OH}	–6		mA	

5.1.2 LED and GPIO

The following table shows the DC specifications for the LED and GPIO pins.

Table 690 • **LED and GPIO Characteristics**

Pin	Symbol	Minimum	Maximum	Unit
LED	I_{OH}		24	mA
LED	I_{OL}	–24		mA
GPIO	I_{OH}		12	mA
GPIO	I_{OL}	–12		mA

5.1.3 Internal Pull-Up or Pull-Down Resistors

Internal pull-up or pull-down resistors are specified in the following table. For more information about signals with internal pull-up or pull-down resistors, see Pins by Function, page 378.

All internal pull-up resistors are connected to their respective I/O supply.

Table 691 • **Internal Pull-Up or Pull-Down Resistors**

Parameter	Symbol	Minimum	Typical	Maximum	Unit
Internal pull-up resistor, GPIO	R_{PU_GPIO}	33	53	90	kΩ

Table 691 • **Internal Pull-Up or Pull-Down Resistors *(continued)***

Parameter	Symbol	Minimum	Typical	Maximum	Unit
Internal pull-up resistor, all others	R_{PU}	96	120	144	kΩ
Internal pull-down resistor	R_{PD}	96	120	144	kΩ

5.1.4 Reference Clock

The following table shows the DC specifications for a differential reference clock input signal

Table 692 • **Reference Clock DC Characteristics**

Parameter	Symbol	Minimum	Typical	Maximum	Unit
Input voltage range	V_{IP},V_{IN}	–25		1260	mV
Input differential peak-to-peak voltage	$\|V_{ID}\|$	150[1]		1200	mV
Input common-mode voltage	V_{ICM}	0		1200[2]	mV
Differential input impedance	R_I		100		Ω

1. To meet jitter specifications, the minimum $|V_{ID}|$ must be 400 mV. When using a single-ended clock input, the REFCLK_P low voltage must be less than V_{DDA} – 200 mV, and the high voltage level must be greater than V_{DDA} + 200 mV
2. The maximum common-mode voltage is provided without a differential signal. The common-mode voltage is only limited by the maximum and minimum input voltage range and by the differential amplitude of the input signal.

5.1.5 1588 Reference Clock

The following table shows the DC specifications for a differential 1588 reference clock input signal.

Table 693 • **1588 Reference Clock DC Characteristics**

Parameter	Symbol	Minimum	Typical	Maximum	Unit
Input voltage range	V_{IP},V_{IN}	–25		1260	mV
Input differential peak-to-peak voltage	$\|V_{ID}\|$	150		1200	mV
Input common-mode voltage	V_{ICM}	0		1200[1]	mV
Differential input impedance	R_I		100		Ω

1. The maximum common-mode voltage is provided without a differential signal. The common-mode voltage is only limited by the maximum and minimum input voltage range and by the differential amplitude of the input signal.

5.1.6 SerDes Interface (SGMII)

The SerDes output drivers are designed to operate in SGMII/LVDS mode. The SGMII/LVDS mode meets or exceeds the DC requirements of Serial-GMII Specification Revision 1.9 (ENG-46158), unless otherwise noted. The following table lists the DC specifications for the SGMII driver. The values are valid for all configurations, unless stated otherwise.

Table 694 • **SerDes Driver DC Specifications**

Parameter	Symbol	Minimum	Maximum	Unit	Condition
Output high voltage, V_{OA} or V_{OB}	V_{OH}		1050	mV	R_L = 100 Ω ±1%
Output low voltage, V_{OA} or V_{OB}	V_{OL}	0		mV	R_L = 100 Ω ±1%

Table 694 • **SerDes Driver DC Specifications *(continued)***

Parameter	Symbol	Minimum	Maximum	Unit	Condition
Output differential peak voltage	$\|V_{OD}\|$	350	450	mV	V_{DD_VS} = 1.0 V R_L = 100 Ω ±1%
Output differential peak voltage, fiber media 1000BASE-X	$\|V_{OD}\|$	350	450	mV	V_{DD_VS} = 1.0 V R_L = 100 Ω ±1%
Output offset voltage(1)	V_{OS}	420	580	mV	V_{DD_VS} = 1.0 V R_L = 100 Ω ±1%
DC output impedance, single-ended, SGMII mode	R_O	40	140	Ω	V_C = 1.0 V See Figure 80, page 361
R_O mismatch between A and B, SGMII mode(2)	ΔR_O		10	%	V_C = 1.0 V See Figure 80, page 361
Change in $\|V_{OD}\|$ between 0 and 1, SGMII mode	$\Delta\|V_{OD}\|$		25	mV	R_L = 100 Ω ±1%
Change in V_{OS} between 0 and 1, SGMII mode	ΔV_{OS}		25	mV	R_L = 100 Ω ±1%
Output current, driver shorted to GND, SGMII mode	$\|I_{OSA}\|$, $\|I_{OSB}\|$		40	mA	
Output current, drivers shorted together, SGMII mode	$\|I_{OSAB}\|$		12	mA	

1. Requires AC-coupling for SGMII compliance.
2. Matching of reflection coefficients. For more information about test methods, see IEEE Std 1596.3-1996.

Figure 78 • **SGMII DC Transmit Test Circuit**

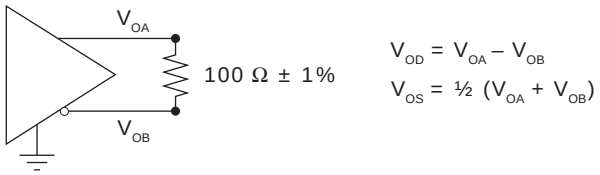

Figure 79 • **SGMII DC Definitions**

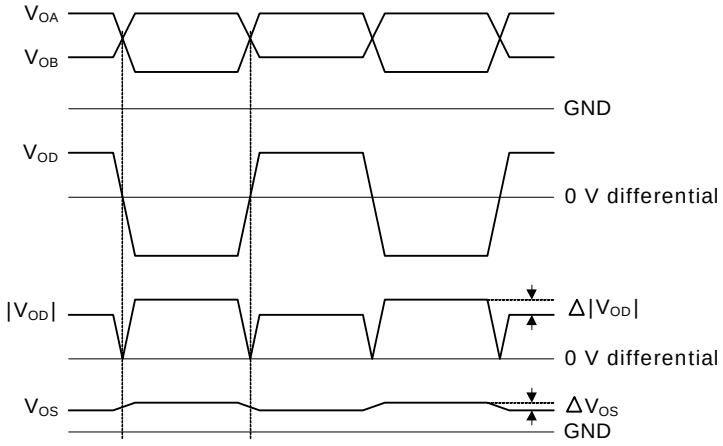

$\Delta|V_{OD}| = |\,|V_{OAH} - V_{OBL}| - |V_{OBH} - V_{OAL}|\,|$

$\Delta V_{OS} = |\,½(V_{OAH} + V_{OBL}) - ½(V_{OAL} + V_{OBH})\,|$

Figure 80 • **SGMII DC Driver Output Impedance Test Circuit**

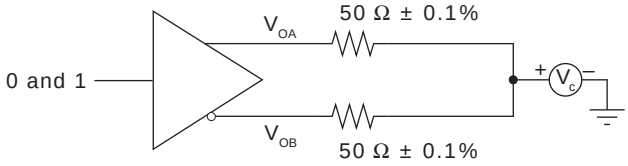

The following table lists the DC specifications for the SGMII receivers.

Table 695 • **SerDes Receiver DC Specifications**

Parameter	Symbol	Minimum	Maximum	Unit	Condition
Input voltage range, V_{IA} or V_{IB}	V_I	–25	1250	mV	
Input differential peak-to-peak voltage	$\|V_{ID}\|$	100	1000	mV	
Input common-mode voltage(1)	V_{ICM}	0	V_{DD_A}(2)	mV	Without any differential signal
Receiver differential input impedance	R_I	80	120	Ω	
Input differential hysteresis, SGMII mode	V_{HYST}	25		mV	

1. SGMII compliancy requires external AC-coupling. When interfacing with specific Microsemi devices, DC-coupling is possible. For more information, contact your local Microsemi sales representative.
2. The common-mode voltage is only limited by the maximum and minimum input voltage range and the input signal's differential amplitude.

Figure 81 • **SGMII DC Input Definitions**

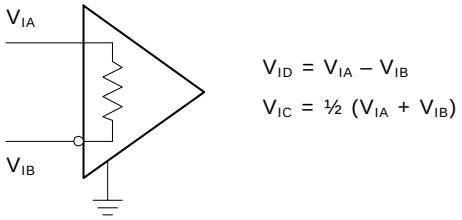

5.1.7 Enhanced SerDes Interface (QSGMII)

All DC specifications for the enhanced SerDes interface are compliant with QSGMII Specification Revision 1.3 and meet or exceed the requirements in the standard. They are also compliant with OIF-CEI-02.0 requirements where applicable.

The enhanced SerDes interface supports the following operating modes: SGMII, QSGMII, and SFP. The values in the following table apply to the modes specified in the condition column.

The following table shows the DC specifications for the enhanced SerDes driver.

Table 696 • **Enhanced SerDes Driver DC Specifications**

Parameter	Symbol	Minimum	Maximum	Unit	Condition
Output differential peak voltage, SFP and QSGMII modes	$\|V_{ODp}\|$	250	400	mV	V_{DD_VS} = 1.0 V R_L = 100 Ω ±1% maximum drive
Output differential peak voltage, SGMII mode(1)	$\|V_{ODp}\|$	150	400	mV	V_{DD_VS} = 1.0 V R_L = 100 Ω ±1%

Table 696 • **Enhanced SerDes Driver DC Specifications *(continued)***

Parameter	Symbol	Minimum	Maximum	Unit	Condition
DC output impedance, single-ended, SGMII mode	R_O	40	140	Ω	V_C = 1.0 V See Figure 80, page 361
R_O mismatch between A and B, SGMII mode(2)	ΔR_O		10	%	V_C = 1.0 V See Figure 80, page 361
Change in $\|V_{OD}\|$ between 0 and 1, SGMII mode	$\Delta\|V_{OD}\|$		25	mV	R_L = 100 Ω ±1%
Change in V_{OS} between 0 and 1, SGMII mode	ΔV_{OS}		25	mV	R_L = 100 Ω ±1%
Output current, drivers shorted to ground, SGMII and QSGMII modes	$\|I_{OSA}\|$, $\|I_{OSB}\|$		40	mA	
Output current, drivers shorted together, SGMII and QSGMII modes	$\|I_{OSAB}\|$		12	mA	

1. Voltage is adjustable in 64 steps.
2. Matching of reflection coefficients. For more information about test methods, see IEEE Std 1596.3-1996.

The following table lists the DC specifications for the enhanced SerDes receiver.

Table 697 • **Enhanced SerDes Receiver DC Specifications**

Parameter	Symbol	Minimum	Typical	Maximum	Unit
Input voltage range, V_{IA} or V_{IB}(1)	V_I	–0.25		1.2	V
Input differential peak-to-peak voltage	$\|V_{ID}\|$	100		1600	mV
Input common-mode voltage	V_{ICM}	0		1200	mV
Receiver differential input impedance	R_I	80	100	120	Ω

1. QSGMII DC input sensitivity is less than 400 mV.

5.1.8 Current Consumption

The following tables show the current consumption values for each mode. Add significant margin above the values for sizing power supplies.

Table 698 • **Current Consumption**

Mode	Typical				Maximum				Unit	Condition
	1 V Digital	1 V Analog	2.5 V Digital	2.5 V Analog	1 V Digital	1 V Analog	2.5 V Digital	2.5 V Analog		
Reset	52	55	9	1	460	110	13	5	mA	
Power down	110	170	10	20	525	220	15	25	mA	
1000BASE-T	395	200	10	445	900	270	15	500	mA	4-Port SGMII
100BASE-TX	190	185	10	290	640	245	15	310	mA	4-Port SGMII
10BASE-T	145	180	10	240	575	240	15	245	mA	4-Port SGMII
10BASE-Te	145	180	10	205	575	240	15	210	mA	4-Port SGMII

Table 698 • **Current Consumption *(continued)***

Mode	Typical				Maximum				Unit	Condition
	1 V Digital	1 V Analog	2.5 V Digital	2.5 V Analog	1 V Digital	1 V Analog	2.5 V Digital	2.5 V Analog		
1000BASE-X	155	240	10	20	585	300	15	25	mA	4-Port SGMII
100BASE-FX	140	235	10	20	565	290	15	25	mA	4-Port SGMII
1000BASE-T	475	255	10	445	980	270	15	500	mA	4-Port SGMII + 1588
100BASE-TX	240	235	10	290	670	245	15	310	mA	4-Port SGMII + 1588
10BASE-T	195	230	10	240	600	240	15	245	mA	4-Port SGMII + 1588
10BASE-Te	195	230	10	205	600	240	15	210	mA	4-Port SGMII + 1588
1000BASE-X	235	240	10	20	670	300	15	25	mA	4-Port SGMII + 1588
100BASE-FX	175	235	10	20	600	290	15	25	mA	4-Port SGMII + 1588
1000BASE-T	390	160	10	460	900	225	15	500	mA	4-Port QSGMII
100BASE-TX	185	145	10	305	640	200	15	310	mA	4-Port QSGMII
10BASE-T	140	140	10	255	575	195	15	245	mA	4-Port QSGMII
10BASE-Te	140	140	10	220	575	195	15	210	mA	4-Port QSGMII
1000BASE-X	150	200	10	35	585	255	15	25	mA	4-Port QSGMII
100BASE-FX	135	195	10	35	565	245	15	25	mA	4-Port QSGMII
1000BASE-T	475	210	10	460	980	270	15	500	mA	4-Port QSGMII + 1588
100BASE-TX	240	190	10	305	670	245	15	310	mA	4-Port QSGMII + 1588
10BASE-T	195	185	10	255	600	240	15	245	mA	4-Port QSGMII + 1588
10BASE-Te	195	185	10	220	600	240	15	210	mA	4-Port QSGMII + 1588
1000BASE-X	235	195	10	35	670	300	15	25	mA	4-Port QSGMII + 1588
100BASE-FX	175	190	10	35	600	290	15	25	mA	4-Port QSGMII + 1588

5.1.9 Thermal Diode

The VSC8574-01 device includes an on-die diode and internal circuitry for monitoring die temperature (junction temperature). The operation and accuracy of the diode is not guaranteed and should only be used as a reference. Care should be taken to find compatible grounded cathode temperature monitoring device.

A thermal sensor, located on the board or in a stand-alone measurement kit, can monitor and display the die temperature of the switch for thermal management or instrumentation purposes.

Temperature measurement using a thermal diode is very sensitive to noise.

The following table provides the diode parameter and interface specifications. Note that the ThermDC pin is connected to VSS internally in the device.

Table 699 • **Thermal Diode Parameters**

Parameter	Symbol	Typical	Maximum	Unit
Forward bias current	IFW		1	mA
Diode ideality factor	n	1.008		

Note: Microsemi does not support or recommend operation of the thermal diode under reverse bias.

The ideality factor, n, represents the deviation from ideal diode behavior as exemplified by the diode equation:

$$I_{FW} = I_S \times \left(e^{V_d \times \frac{q}{nkT}} - 1 \right)$$

where, Is = saturation current, q = electronic charge, Vd = voltage across the diode, k = Boltzmann Constant, and T = absolute temperature (Kelvin).

5.2 AC Characteristics

This section provides the AC specifications for the VSC8574-01 device.

5.2.1 Reference Clock

The following table shows the AC specifications for a 125 MHz differential reference clock source. Performance is guaranteed for 125 MHz differential clocks only; however, 125 MHz single-ended clocks are also supported for QSGMII interfaces.

25 MHz clock implementations are available but are limited to SGMII interfaces. For more information, contact your Microsemi representative.

Table 700 • **Reference Clock AC Characteristics for QSGMII 125 MHz Differential Clock**

Parameter	Symbol	Minimum	Typical	Maximum	Unit	Condition
Reference clock frequency, REFCLK_SEL2 = 1	*f*		125.00		MHz	±100 ppm
Duty cycle	DC	40	50	60	%	
Rise time and fall time	t_r, t_f			1.5	ns	20% to 80% threshold
RefClk input RMS jitter requirement, bandwidth between 12 kHz and 500 kHz(1)				20	ps	To meet jitter generation of 1G output data per IEEE 802.3z
RefClk input RMS jitter requirement, bandwidth between 500 kHz and 15 MHz(1)				4	ps	To meet jitter generation of 1G output data per IEEE 802.3z
RefClk input RMS jitter requirement, bandwidth between 15 MHz and 40 MHz(1)				20	ps	To meet jitter generation of 1G output data per IEEE 802.3z
RefClk input RMS jitter requirement, bandwidth between 40 MHz and 80 MHz(1)				100	ps	To meet jitter generation of 1G output data per IEEE 802.3z
Jitter gain from RefClk to SerDes output, bandwidth between 0 MHz and 0.1 MHz				0.3	dB	
Jitter gain from RefClk to SerDes output, bandwidth between 0.1 MHz and 7 MHz			1	3	dB	

Table 700 • **Reference Clock AC Characteristics for QSGMII 125 MHz Differential Clock *(continued)***

Parameter	Symbol	Minimum	Typical	Maximum	Unit	Condition
Jitter gain from RefClk to SerDes output, bandwidth above 7 MHz		1–20 × log (*f*/7 MHz)		3–20 × log (*f*/7 MHz)	dB	

1. Maximum RMS jitter allowed at the RefClk input for the given bandwidth.

5.2.2 Recovered Clock

This section provides the AC characteristics for the recovered clock output signals. The following illustration shows the test circuit for the recovered clock output signals.

Figure 82 • **Test Circuit for Recovered Clock Output Signals**

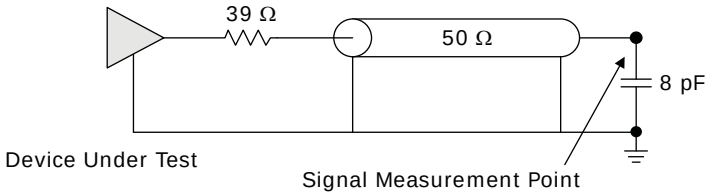

The following table shows the AC specifications for the RCVRDCLK1 and RCVRDCLK2 outputs.

Table 701 • **Recovered Clock AC Characteristics**

Parameter	Symbol	Minimum	Typical	Maximum	Unit	Condition
Recovered clock frequency	*f*		125.00		MHz	
Recovered clock frequency	*f*		31.25		MHz	
Recovered clock frequency	*f*		25.00		MHz	
Recovered clock cycle time	t_{RCYC}		8.0		ns	
Recovered clock cycle time	t_{RCYC}		32.0		ns	
Recovered clock cycle time	t_{RCYC}		40.0		ns	
Frequency stability	$f_{STABILITY}$			50	ppm	
Duty cycle, master mode	DC	40	50	60	%	
Clock rise time and fall time	t_R, t_F		600		ps	20% to 80%
Peak-to-peak jitter, copper media interface (master mode)	JPP_{CLK_Cu}			200	ps	Jitter bandwidth between 12 kHz and 10 MHz
Peak-to-peak jitter, fiber media interface, 100BASE-FX	JPP_{CLK_FiFX}			1.2	ns	Jitter bandwidth between 12 kHz and 80 MHz

Table 701 • **Recovered Clock AC Characteristics *(continued)***

Parameter	Symbol	Minimum	Typical	Maximum	Unit	Condition
Peak-to-peak jitter, fiber media interface, 1000BASE-X	JPP_{CLK_FiX}			200	ps	Jitter bandwidth between 12 kHz and 80 MHz

5.2.3 SerDes Outputs

The values listed in the following table are valid for all configurations, unless otherwise noted.

Table 702 • **SerDes Outputs AC Specifications**

Parameter	Symbol	Minimum	Maximum	Unit	Condition
V_{OD} ringing compared to V_S, SGMII mode	V_{RING}		±10	%	RL = 100 Ω ±1%
V_{OD} rise time and fall time, SGMII mode	t_R, t_F	100	200	ps	20% to 80% of V_S RL = 100 Ω ±1%
Differential peak-to-peak output voltage	V_{OD}		30	mV	Tx disabled
Differential output return loss, 50 MHz to 625 MHz	R_{LO_DIFF}	≥10		dB	RL = 100 Ω ±1%
Differential output return loss, 625 MHz to 1250 MHz	R_{LO_DIFF}	10–10 × log (f/625 MHz)		dB	RL = 100 Ω ±1%
Common-mode return loss, 50 MHz to 625 MHz	RL_{OCM}	6		dB	
Interpair skew, SGMII mode	t_{SKEW}		20	ps	

5.2.4 SerDes Driver Jitter

The following table lists the jitter characteristics for the SerDes output driver.

Table 703 • **SerDes Driver Jitter Characteristics**

Parameter	Symbol	Maximum	Unit	Condition
Total jitter	TJ_O	192	ps	Measured according to IEEE 802.3.38.5
Deterministic jitter	DJ_O	80	ps	Measured according to IEEE 802.3.38.5

5.2.5 SerDes Inputs

The following table lists the AC specifications for the SerDes inputs.

Table 704 • **SerDes Input AC Specifications**

Parameter	Maximum	Unit	Condition
Differential input return loss, 50 MHz to 625 MHz	≥10	dB	RL = 100 Ω ±1%
Differential input return loss, 625 MHz to 1250 MHz	10–10 × log (f/625 MHz)	dB	RL = 100 Ω ±1%

5.2.6 SerDes Receiver Jitter Tolerance

The following table lists jitter tolerances for the SerDes receiver.

Table 705 • **SerDes Receiver Jitter Tolerance**

Parameter	Symbol	Minimum	Unit	Condition
Total jitter tolerance, greater than 637 kHz, SFP mode	TJT_I	600	ps	Measured according to IEEE 802.3 38.6.8
Deterministic jitter tolerance, greater than 637 kHz, SFP mode	DJT_I	370	ps	Measured according to IEEE 802.3 38.6.8
Cycle distortion jitter tolerance, 100BASE-FX mode	JT_{CD}	1.4	ns	Measured according to ISO/IEC 9314-3:1990
Data-dependent jitter tolerance, 100BASE-FX mode	DDJ	2.2	ns	Measured according to ISO/IEC 9314-3:1990
Random peak-to-peak jitter tolerance, 100BASE-FX mode	RJT	2.27	ns	Measured according to ISO/IEC 9314-3:1990

5.2.7 Enhanced SerDes Interface

All AC specifications for the enhanced SerDes interface are compliant with QSGMII Specification Revision 1.3 and meet or exceed the requirements in the standard. They are also compliant with the OIF-CEI-02.0 requirements where applicable.

The enhanced SerDes interface supports the following modes of operation: SGMII, QSGMII, and SFP. The values in the tables in the following sections apply to the QSGMII modes listed in the condition column and are based on the test circuit shown in Figure 78, page 360. The transmit and receive eye specifications relate to the eye diagrams shown in the following illustration, with the compliance load as defined in the test circuit.

Figure 83 • **QSGMII Transient Parameters**

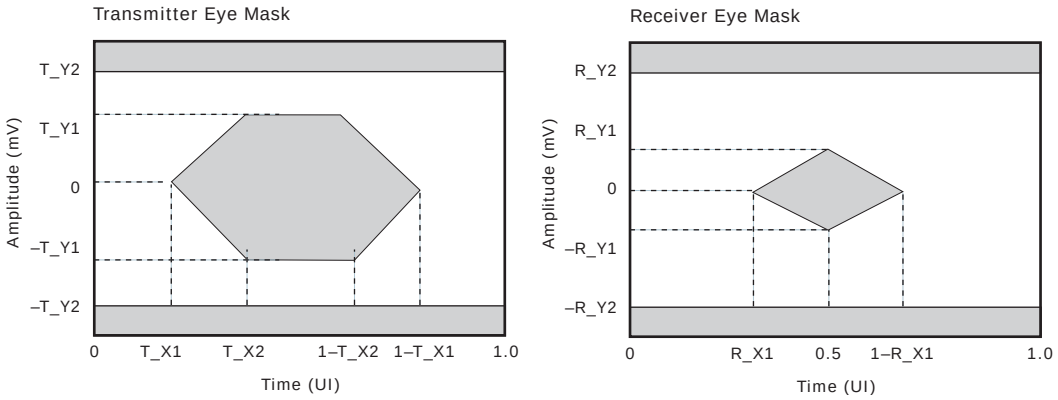

5.2.7.1 Enhanced SerDes Outputs

The following table provides the AC specifications for the enhanced SerDes outputs in SGMII mode.

Table 706 • **Enhanced SerDes Outputs AC Specifications, SGMII Mode**

Parameter	Symbol	Minimum	Maximum	Unit	Condition
Unit interval, 1.25G mode	UI				800 ps
V_{OD} ringing compared to V_S	V_{RING}		±10	%	R_L = 100 Ω ±1%
V_{OD} rise time and fall time	t_R, t_F	100	200	ps	20% to 80% of V_S R_L = 100 Ω ±1%

Table 706 • **Enhanced SerDes Outputs AC Specifications, SGMII Mode**

Parameter	Symbol	Minimum	Maximum	Unit	Condition
Differential peak-to-peak output voltage	V_{OD}		30	mV	Tx disabled
Differential output return loss, 50 MHz to 625 MHz	RL_{O_DIFF}	≥10		dB	R_L = 100 Ω ±1%
Differential output return loss, 625 MHz to 1250 MHz	RL_{O_DIFF}	10–10 × log (*f*/625 MHz)		dB	R_L = 100 Ω ±1%
Common-mode return loss, 50 MHz to 625 MHz	RL_{OCM}	6		dB	
Intrapair skew	t_{SKEW}		20	ps	

The following table provides the AC specifications for the enhanced SerDes outputs in QSGMII mode.

Table 707 • **Enhanced SerDes Outputs AC Specifications, QSGMII Mode**

Parameter	Symbol	Minimum	Maximum	Unit	Condition
Unit interval, 5G	UI				200 ps
V_{OD} rise time and fall time	t_R, t_F	30	96	ps	20% to 80% of V_S R_L = 100 Ω ±1%
Differential peak-to-peak output voltage	V_{OD}		30	mV	Tx disabled
Differential output return loss, 100 MHz to 2.5 GHz	RL_{O_DIFF}	8		dB	R_L = 100 Ω ±1%
Differential output return loss, 2.5 GHz to 5 GHz	RL_{O_DIFF}	8 dB – 16.6 log (*f*/2.5 GHz)		dB	R_L = 100 Ω ±1%
Eye mask X1	T_X1		0.15	UI	
Eye mask X2	T_X2		0.4	UI	
Eye mask Y1	T_Y1	200		mV	
Eye mask Y2	T_Y2		450	mV	

5.2.7.2 Enhanced SerDes Driver Jitter Characteristics

The following table lists the jitter characteristics for the enhanced SerDes driver in QSGMII mode. For information about jitter characteristics for the enhanced SerDes driver in SGMII mode, see Table 703, page 366.

Table 708 • **Enhanced SerDes Driver Jitter Characteristics, QSGMII Mode**

Parameter	Symbol	Maximum	Unit	Condition
Total output jitter	TJ_O	60	ps	Measured according to IEEE 802.3.38.5.
Deterministic output jitter	DJ_O	10	ps	Measured according to IEEE 802.3.38.5.

5.2.7.3 Enhanced SerDes Inputs

The following table lists the AC specifications for the enhanced SerDes inputs in SGMII mode.

Table 709 • **Enhanced SerDes Input AC Specifications, SGMII Mode**

Parameter	Symbol	Minimum	Unit	Condition
Unit interval, 1.25G	UI		ps	800 ps
Differential input return loss, 50 MHz to 625 MHz	RL_{I_DIFF}	10	dB	R_L = 100 Ω ±1%
Common-mode input return loss, 50 MHz to 625 MHz	RL_{ICM}	6	dB	

The following table lists the AC specifications for the enhanced SerDes inputs in QSGMII mode.

Table 710 • **Enhanced SerDes Inputs AC Specifications, QSGMII Mode**

Parameter	Symbol	Minimum	Maximum	Unit	Condition
Unit interval, 5G	UI				200 ps
Differential input return loss, 100 MHz to 2.5 GHz	RL_{I_DIFF}	8		dB	R_L = 100 Ω ±1%
Differential input return loss, 2.5 GHz to 5 GHz	RL_{I_DIFF}	8 dB – 16.6 log (f/2.5 GHz)		dB	R_L = 100 Ω ±1%
Common-mode input return loss, 100 MHz to 2.5 GHz	RL_{ICM}	6		dB	
Eye mask X1	R_X1		0.3	UI	
Eye mask Y1	R_Y1		50	mV	
Eye mask Y2	R_Y2		450	mV	

5.2.7.4 Enhanced SerDes Receiver Jitter Tolerance

The following table lists the jitter tolerance for the enhanced SerDes receiver in QSGMII mode. For information about jitter tolerance for the enhanced SerDes receiver in SGMII mode, see Table 705, page 367.

Table 711 • **Enhanced SerDes Receiver Jitter Tolerance, QSGMII Mode**

Parameter	Symbol	Maximum	Unit	Condition
Bounded high-probability jitter(1)	BHPJ	90	ps	92 ps peak-to-peak random jitter and 38 ps sinusoidal jitter (SJHF).
Sinusoidal jitter, maximum	SJ_{MAX}	1000	ps	
Sinusoidal jitter, high frequency	SJ_{HF}	10	ps	
Total jitter tolerance	TJT_I	120	ps	92 ps peak-to-peak random jitter and 38 ps sinusoidal jitter (SJHF).

1. This is the sum of uncorrelated bounded high probability jitter (0.15 UI), and correlated bounded high probability jitter (0.30 UI). Uncorrelated bounded high probability jitter is distribution where the value of the jitter shows no correlation to any signal level being transmitted, formally defined as deterministic jitter (DJ). Correlated bounded high probability jitter is jitter distribution where the value of the jitter shows a strong correlation to the signal level being transmitted.

5.2.8 Basic Serial LEDs

This section contains the AC specifications for the basic serial LEDs.

Table 712 • **Basic Serial LEDs AC Characteristics**

Parameter	Symbol	Typical	Unit
LED_CLK cycle time	t_{CYC}	1024	ns
Pause between LED port sequences	t_{PAUSE_port}	3072	ns
Pause between LED bit sequences	t_{PAUSE_bit}	25.541632	ms
LED_CLK to LED_DATA	t_{CO}	1	ns

Figure 84 • **Basic Serial LED Timing**

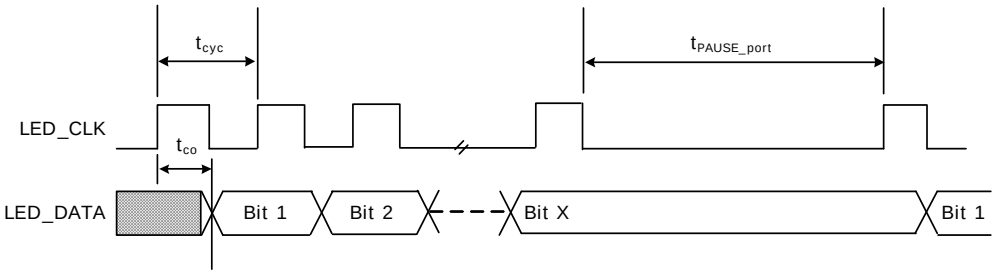

5.2.9 Enhanced Serial LEDs

This section contains the AC specifications for the enhanced serial LEDs. The duty cycle of the LED_PULSE signal is programmable and can be varied between 0.5% and 99.5%.

Table 713 • **Enhanced Serial LEDs AC Characteristics**

Parameter	Symbol	Minimum	Typical	Maximum	Unit
LED_CLK cycle time	t_{CYC}		256		ns
Pause between LED_DATA bit sequences	t_{PAUSE}	0.396		24.996	ms
LED_CLK to LED_DATA	t_{CO}		127		ns
LED_CLK to LED_LD	t_{CL}		256		ns
LED_LD pulse width	t_{LW}		128		ns
LED_PULSE cycle time	t_{PULSE}	199		201	µs

Figure 85 • **Enhanced Serial LED Timing**

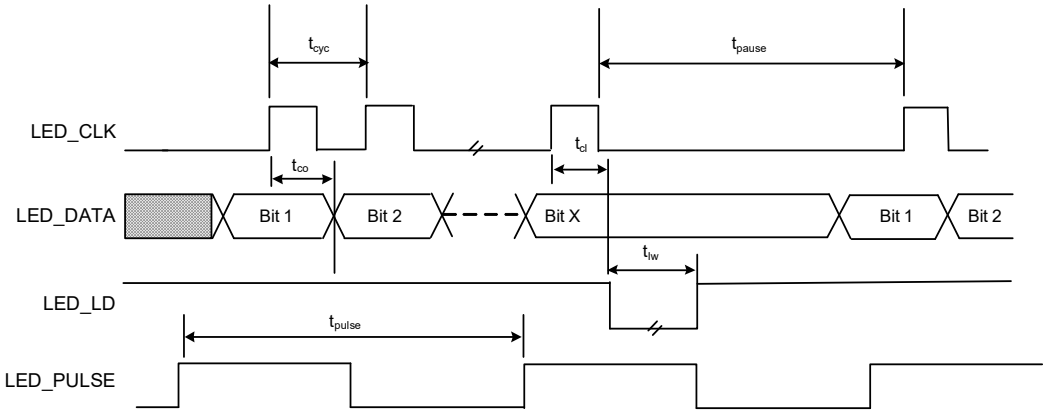

5.2.10 JTAG Interface

This section provides the AC specifications for the JTAG interface. The specifications meet or exceed the requirements of IEEE 1149.1-2001. The JTAG receive signal requirements are requested at the pin of the device. The JTAG_TRST signal is asynchronous to the clock, and does not have a setup or hold time requirement.

Table 714 • **JTAG Interface AC Specifications**

Parameter	Symbol	Minimum	Maximum	Unit	Condition
TCK frequency	f		10	MHz	
TCK cycle time	t_C	100		ns	
TCK high time	$t_{W(CH)}$	40		ns	
TCK low time	$t_{W(CL)}$	40		ns	
Setup time to TCK rising	t_{SU}	10		ns	
Hold time from TCK rising	t_H	10		ns	
TDO valid after TCK falling	$t_{V(C)}$		28	ns	C_L = 10 pF
TDO hold time from TCK falling	$t_{H(TDO)}$	0		ns	C_L = 0 pF
TDO disable time(1)	t_{DIS}		30	ns	See Figure 87, page 372.
TRST time low	$t_{W(TL)}$	30		ns	

1. The pin begins to float when a 300 mV change from the actual V_{OH}/V_{OL} level occurs.

Figure 86 • **JTAG Interface Timing Diagram**

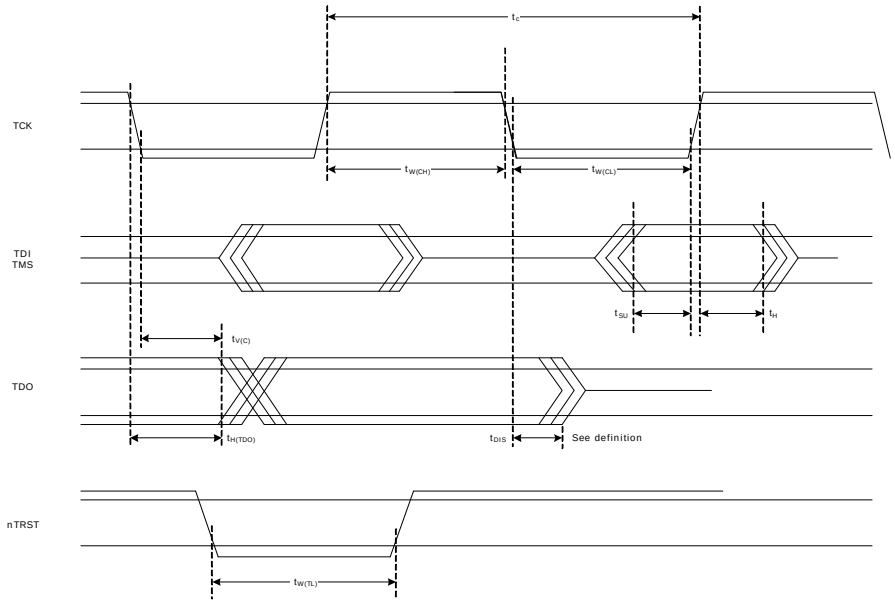

Figure 87 • **Test Circuit for TDO Disable Time**

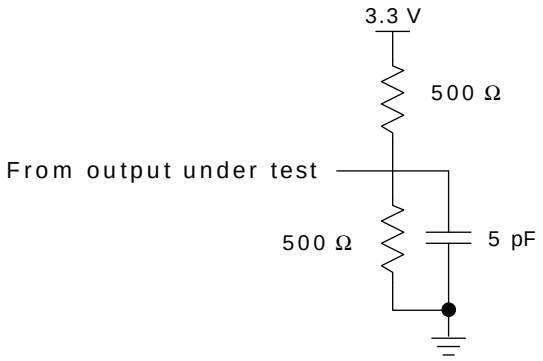

5.2.11 Serial Management Interface

This section contains the AC specifications for the serial management interface (SMI).

Table 715 • **Serial Management Interface AC Characteristics**

Parameter	Symbol	Minimum	Typical	Maximum	Unit	Condition
MDC frequency(1)	f_{CLK}		2.5	12.5	MHz	
MDC cycle time	t_{CYC}	80	400		ns	
MDC time high	t_{WH}	20	50		ns	
MDC time low	t_{WL}	20	50		ns	
Setup to MDC rising	t_{SU}	10			ns	
Hold from MDC rising	t_H	10			ns	
MDC rise time	t_R			100 t_{CYC} × 10%(1)	ns	MDC = 0: 1 MHz MDC = 1: MHz – f_{CLK} maximum
MDC fall time	t_F			100 t_{CYC} × 10%(1)		
MDC to MDIO valid	t_{CO}		10	300	ns	Time-dependant on the value of the external pull-up resistor on the MDIO pin

1. For f_{CLK} above 1 MHz, the minimum rise time and fall time is in relation to the frequency of the MDC clock period. For example, if f_{CLK} is 2 MHz, the minimum clock rise time and fall time is 50 ns.

Figure 88 • **Serial Management Interface Timing**

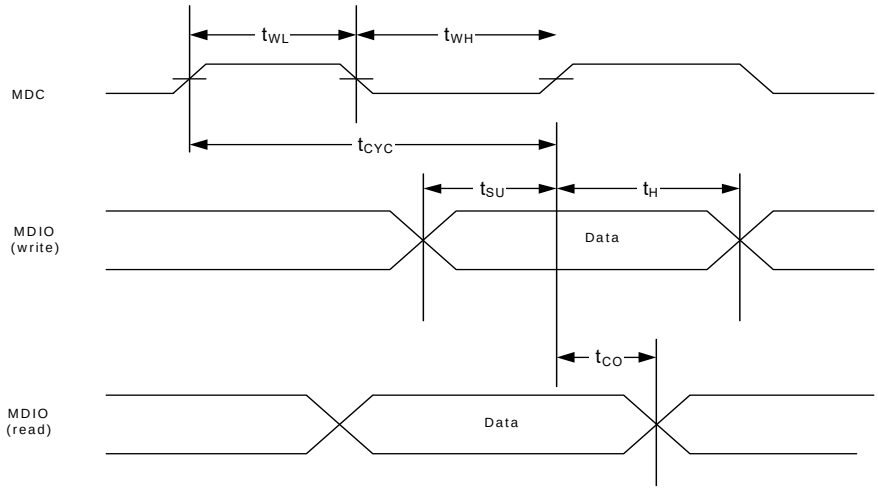

5.2.12 Reset Timing

This section contains the AC specifications that apply to device reset functionality. The signal applied to the NRESET input must comply with the specifications listed in the following table.

Table 716 • **Reset Timing Specifications**

Parameter	Symbol	Minimum	Maximum	Unit
NRESET assertion time after power supplies and clock stabilize	t_W	2		ms
Recovery time from reset inactive to device fully active	t_{REC}		105	ms
NRESET pulse width	$t_{W(RL)}$	100		ns
Wait time between NRESET de-assert and access of the SMI interface	t_{WAIT}	105		ms

5.2.13 1588 Timing Specifications

This section contains the AC specifications for the 1588 clock pins.

Table 717 • **1588 Timing Specifications AC Characteristics**

Parameter	Symbol	Minimum	Typical	Maximum	Unit	Condition
1588 reference clock frequency[1]	*f*	125		250	MHz	±100 ppm Jitter < 10 ps RMS
Duty cycle	DC	40	50	60	%	
Rise time and fall time	t_R, t_F		1.5		ns	20% to 80% threshold

1. Supports a continuum of frequencies between 125 MHz and 250 MHz.

5.2.14 Serial Timestamp Interface

This section contains information about the AC specifications for the serial timestamp interface.

Table 718 • **Serial Timestamp Interface**

Parameter	Symbol	Minimum	Typical	Maximum	Unit	Condition
1588_SPI_CLK frequency				41.67[1]	MHz	
1588_SPI_DO clock-to-Q timing	$t_{CLK\text{-}to\text{-}Q}$	–9		1	ns	
1588_SPI_CS clock-to-Q timing	$t_{CLK\text{-}to\text{-}Q}$	–9		1	ns	

1. SPI clock high time programmed through SI_CLK_HI_CYCs shall be greater than 0x1 (8 nanoseconds). Duty cycle is dependent on SI_CLK_HI_CYC and SI_CLK_LO_CYC configuration.

The following illustration shows the serial timestamp interface timing diagram.

Note: Data changes state on a falling 1588_SPI_CLK edge in the default configuration. 1588_SPI_CLK can be inverted by setting the 1588 register bit TS_FIFO_SI_CFG:SI_CLK_PHA.

Figure 89 • **Serial Timestamp Interface Timing Diagram**

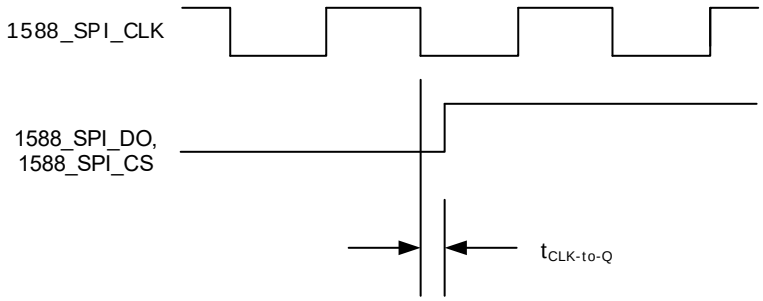

5.2.15 Local Time Counter Load/Save Timing

This section contains information about the AC specifications for the local time counter load/save signal.

Figure 90 • **Local Time Counter Load/Save Timing Diagram**

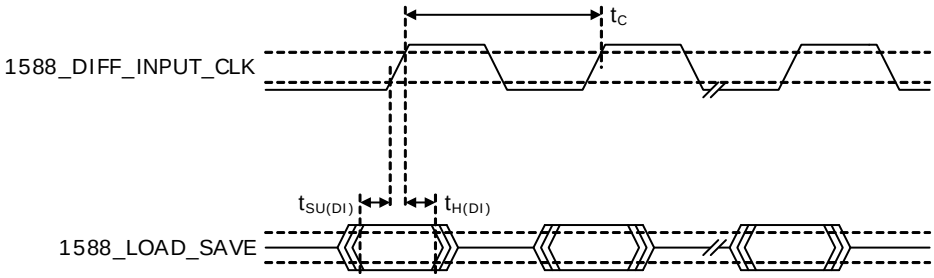

Table 719 • **Local Time Counter Load/Save Timing Specifications**

Parameter	Symbol	Minimum	Maximum	Unit
Clock frequency	f		250	MHz
Clock cycle time	t_C	4		ns
DI setup time to clock	$t_{SU(DI)}$	2.8		ns
DI hold time from clock	$t_{H(DI)}$	0.3		ns

5.3 Operating Conditions

The following table shows the recommended operating conditions for the VSC8574-01 device.

Table 720 • **Recommended Operating Conditions**

Parameter	Symbol	Minimum	Typical	Maximum	Unit
Power supply voltage for V_{DD1}	V_{DD1}	0.95	1.00	1.05	V
Power supply voltage for V_{DD1A}	V_{DD1A}	0.95	1.00	1.05	V
Power supply voltage for V_{DD25}	V_{DD25}	2.38	2.50	2.62	V
Power supply voltage for V_{DD25A}	V_{DD25A}	2.38	2.50	2.62	V
VSC8574-01 operating temperature(1)	T	0		125	°C
VSC8574-04 operating temperature(1)	T	–40		125	°C

1. Minimum specification is ambient temperature, and the maximum is junction temperature. For carrier class applications, the maximum operating temperature is 110 °C junction.

5.4 Stress Ratings

This section contains the stress ratings for the VSC8574-01 device.

Warning Stresses listed in the following table may be applied to devices one at a time without causing permanent damage. Functionality at or exceeding the values listed is not implied. Exposure to these values for extended periods may affect device reliability.

Table 721 • **Stress Ratings**

Parameter	Symbol	Minimum	Maximum	Unit
Power supply voltage for core supply	V_{VDD1}	–0.3	1.10	V
Power supply voltage for analog circuits	V_{VDD1A}	–0.3	1.10	V
Power supply voltage for analog circuits	V_{VDD25A}	–0.3	2.75	V
Power supply voltage for digital I/O	V_{VDD25}	–0.3	2.75	V
Input voltage for GPIO and logic input pins			3.3	V
Storage temperature	T_S	–55	125	°C
Electrostatic discharge voltage, charged device model	V_{ESD_CDM}	–250	250	V
Electrostatic discharge voltage, human body model	V_{ESD_HBM}	See note(1)		V

1. This device has completed all required testing as specified in the JEDEC standard JESD22-A114, *Electrostatic Discharge (ESD) Sensitivity Testing Human Body Model (HBM)*, and complies with a Class 2 rating. The definition of Class 2 is any part that passes an ESD pulse of 2000 V, but fails an ESD pulse of 4000 V.

Warning This device can be damaged by electrostatic discharge (ESD) voltage. Microsemi recommends that all integrated circuits be handled with appropriate precautions. Failure to observe proper handling and installation procedures may adversely affect reliability of the device.

6 Pin Descriptions

The VSC8574-01 device has 256 pins, which are described in this section.

The pin information is also provided as an attached Microsoft Excel file so that you can copy it electronically. In Acrobat, double-click the attachment icon.

6.1 Pin Identifications

This section contains the pin descriptions for the VSC8574-01 device. The following table provides notations for definitions of the various pin types.

Table 722 • **Pin Type Symbol Definitions**

Symbol	Pin Type	Description
3V		3.3 V-tolerant pin.
ABIAS	Analog bias	Analog bias pin.
ADIFF	Analog differential	Analog differential signal pair.
I	Input	Input without on-chip pull-up or pull-down resistor.
I/O	Bidirectional	Bidirectional input or output signal.
NC	No connect	No connect pins must be left floating.
O	Output	Output signal.
OD	Open drain	Open drain output.
OS	Open source	Open source output.
PD	Pull-down	On-chip pull-down resistor to VSS.
PU	Pull-up	On-chip pull-up resistor to VDD_IO.
ST	Schmitt-trigger	Input has Schmitt-trigger circuitry.

6.2 Pin Diagram

The following illustrations show the pin diagram for the VSC8574-01 device. For clarity, the device is shown in two halves, the top left and top right.

Figure 91 • **Pin Diagram, Top Left**

	1	2	3	4	5	6	7	8
A	NC_1	TXVPA_3	TXVPB_3	TXVPC_3	TXVPD_3	TXVPA_2	TXVPB_2	TXVPC_2
B	VSS_1	TXVNA_3	TXVNB_3	TXVNC_3	TXVND_3	TXVNA_2	TXVNB_2	TXVNC_2
C	REFCLK_N	VDD25A_1	THERMDA	VDD25A_2	VSS_3	VDD25A_3	VDD1A_1	VDD1A_2
D	REFCLK_P	THERMDC_VSS	REF_FILT_A	REF_REXT_A	VSS_6	VSS_7	VSS_8	VSS_9
E	REFCLK_SEL2	TMS	TRST	VDD25A_6	VDD1_1	VSS_14	VSS_15	VSS_16
F	TDO	TDI	TCK	VSS_20	VDD1_3	VSS_21	VSS_22	VSS_23
G	LED0_0	LED1_0	LED2_0	LED3_0	VDD1_5	VSS_27	VSS_28	VSS_29
H	LED0_1	LED1_1	LED2_1	LED3_1	VDD1_7	VSS_33	VSS_34	VSS_35
J	LED0_2	LED1_2	LED2_2	LED3_2	VDD1_9	VSS_39	VSS_40	VSS_41
K	LED0_3	LED1_3	LED2_3	LED3_3	VDD1_11	VSS_45	VSS_46	VSS_47
L	RESERVED_5	1588_PPS_3	COMA_MODE	RESERVED_3	VDD1_13	VSS_51	VSS_52	VSS_53
M	RESERVED_6	MDINT	NRESET	VDD25_2	VDD1_15	VSS_57	VSS_58	VSS_59
N	RESERVED_7	MDIO	1588_PPS_1	1588_PPS_2	VDD1_17	VSS_63	VSS_64	VSS_65
P	RESERVED_8	MDC	VDD25_4	RESERVED_4	VDD25A_8	VDD1A_5	VDD1A_6	VDD1A_7
R	VSS_69	FIBROP_3	FIBRIP_3	RDP_3	TDP_3	FIBROP_2	FIBRIP_2	RDP_2
T	NC_3	FIBRON_3	FIBRIN_3	RDN_3	TDN_3	FIBRON_2	FIBRIN_2	RDN_2

Figure 92 • **Pin Diagram, Top Right**

9	10	11	12	13	14	15	16	
TXVPD_2	TXVPA_1	TXVPB_1	TXVPC_1	TXVPD_1	TXVPA_0	TXVPB_0	NC_2	A
TXVND_2	TXVNA_1	TXVNB_1	TXVNC_1	TXVND_1	TXVNA_0	TXVNB_0	VSS_2	B
VDD1A_3	RESERVED_1	VDD25A_4	VSS_4	VDD1A_4	VDD25A_5	TXVNC_0	TXVPC_0	C
VSS_10	VSS_11	VSS_12	VSS_13	RESERVED_2	VSS_71	TXVND_0	TXVPD_0	D
VSS_17	VSS_18	VSS_19	VDD1_2	VDD25A_7	VSS_72	CLK_SQUELCH_IN	1588_SPI_CLK	E
VSS_24	VSS_25	VSS_26	VDD1_4	VSS_73	PHYADD4	VSS_74	RCVRDCLK1	F
VSS_30	VSS_31	VSS_32	VDD1_6	PHYADD2	PHYADD3	VSS_75	RCVRDCLK2	G
VSS_36	VSS_37	VSS_38	VDD1_8	VDD25_1	GPIO13/1588_SPI_DO	VSS_76	VSS_77	H
VSS_42	VSS_43	VSS_44	VDD1_10	VSS_78	GPIO12/1588_SPI_CS	1588_DIFF_INPUT_CLK_P	1588_DIFF_INPUT_CLK_N	J
VSS_48	VSS_49	VSS_50	VDD1_12	GPIO8/I2C_SDA	GPIO9/FASTLINK-FAIL	GPIO10/1588_LOAD_SAVE	GPIO11/1588_PPS_0	K
VSS_54	VSS_55	VSS_56	VDD1_14	GPIO4/I2C_SCL_0	GPIO5/I2C_SCL_1	GPIO6/I2C_SCL_2	GPIO7/I2C_SCL_3	L
VSS_60	VSS_61	VSS_62	VDD1_16	VDD25_3	GPIO1/SIGDET1	GPIO2/SIGDET2	GPIO3/SIGDET3	M
VSS_66	VSS_67	VSS_68	VDD1_18	SerDes_Rext_1	GPIO0/SIGDET0	TDP_0	TDN_0	N
VDD1A_8	VDD1A_9	VDD1A_10	VDD25A_9	VDD25A_10	SerDes_Rext_0	RDP_0	RDN_0	P
TDP_2	FIBROP_1	FIBRIP_1	RDP_1	TDP_1	FIBROP_0	FIBRIP_0	VSS_70	R
TDN_2	FIBRON_1	FIBRIN_1	RDN_1	TDN_1	FIBRON_0	FIBRIN_0	NC_4	T

6.3 Pins by Function

This section contains the functional pin descriptions for the VSC8574-01 device.

6.3.1 1588 Support

The following table lists the 1588 support pins.

Table 723 • **1588 Support Pins**

Name	Pin	Type	Description
1588_DIFF_INPUT_CLK_N 1588_DIFF_INPUT_CLK_P	J16 J15	ADIFF	Differential reference clock input pair.
1588_PPS_1	N3	O	1588 local timer 1 PPS fixed to local timestamp counter PHY1.

Table 723 • **1588 Support Pins *(continued)***

Name	Pin	Type	Description
1588_PPS_2	N4	O	1588 local timer 2 PPS fixed to local timestamp counter PHY2.
1588_PPS_3	L2	O	1588 local timer 3 PPS fixed to local timestamp counter PHY3.
1588_SPI_CLK	E16	O	1588 SPI clock.

6.3.2 GPIO and 1588 Support

The following table lists the GPIO and 1588 support pins.

Table 724 • **GPIO and 1588 Support Pins**

Name	Pin	Type	Description
GPIO10/1588_LOAD_SAVE	K15	I/O, PU, 3 V	Sync signal to load the time to the 1588 engine. Rising edge triggered.
GPIO11/1588_PPS_0	K16	I/O, PU, 3 V	1588 local timer 0 PPS configurable to local timestamp counter PHY0 through PHY3.
GPIO12/1588_SPI_CS	J14	I/O, PU, 3 V	1588 SPI chip select.
GPIO13/1588_SPI_DO	H14	I/O, PU, 3 V	1588 SPI data output.

6.3.3 GPIO and SIGDET

The following table lists the GPIO and SIGDET pins.

Table 725 • **GPIO and SIGDET Pins**

Name	Pin	Type	Description
GPIO0/SIGDET0	N14	I/O, PU, 3 V	General purpose input/output (GPIO). The multipurpose SIGDET pins, two-wire serial controller pins, and fast link fail pin can be configured to serve as GPIOs.
GPIO1/SIGDET1	M14		
GPIO2/SIGDET2	M15		
GPIO3/SIGDET3	M16		
GPIO4/I2C_SCL_0	L13		
GPIO5/I2C_SCL_1	L14		
GPIO6/I2C_SCL_2	L15		
GPIO7/I2C_SCL_3	L16		
GPIO8/I2C_SDA	K13		
GPIO9/FASTLINK-FAIL	K14		

6.3.4 JTAG

The following table lists the JTAG test pins.

Table 726 • **JTAG Pins**

Name	Pin	Type	Description
TCK	F3	I, PU, ST, 3 V	JTAG test clock input.
TDI	F2	I, PU, ST, 3 V	JTAG test serial data input.
TDO	F1	O	JTAG test serial data output.
TMS	E2	I, PU, ST, 3 V	JTAG test mode select.

Table 726 • **JTAG Pins *(continued)***

Name	Pin	Type	Description
TRST	E3	I, PU, ST, 3 V	JTAG reset. **Important** When JTAG is not in use, this pin must be tied to ground with a pull-down resistor for normal operation.

6.3.5 Miscellaneous

The following table lists the miscellaneous pins.

Table 727 • **Miscellaneous Pins**

Name	Pin	Type	Description
CLK_SQUELCH_IN	E15	I, PU, 3 V	Input control to squelch recovered clock.
COMA_MODE	L3	I, PU, 3 V	When this pin is asserted high, all PHYs are held in a powered down state. When de-asserted low, all PHYs are powered up and resume normal operation. This signal is also used to synchronize the operation of multiple chips on the same PCB to provide visual synchronization for LEDs driven by separate chips.(1)
LED0_[0:3] LED1_[0:3] LED2_[0:3] LED3_[0:3]	G1, H1, J1, K1 G2, H2, J2, K2 G3, H3, J3, K3 G4, H4, J4, K4	O	LED direct-drive outputs. All LEDs pins are active-low. A serial LED stream can also be implemented. See LED Mode Select, page 109. **Note:** LEDbit_port, where port = PHY port number and bit = the particular LED for the port.
NC_1 NC_2 NC_3 NC_4	A1 A16 T1 T16	NC	No connect.
PHYADD2 PHYADD3 PHYADD4	G13 G14 F14	I, PD, 3 V	Device SMI address bits 4:2.
RCVRDCLK1 RCVRDCLK2	F16 G16	O	Clock output can be enabled or disabled and also output a clock frequency of 125 MHz or 25 MHz based on the selected active recovered media programmed for this pin. This pin is not active when NRESET is asserted. When disabled, the pin is held low.
REF_FILT_A	D3	ABIAS	Reference filter connects to an external 1 µF capacitor to analog ground.
REF_REXT_A	D4	ABIAS	Reference external connects to an external 2 kΩ (1%) resistor to analog ground.
REFCLK_N REFCLK_P	C1 D1	I, ADIFF	125 MHz or 25 MHz reference clock input pair. Must be capacitively coupled and LVDS compatible.
REFCLK_SEL2	E1	I, PU, 3 V	Selects the reference clock speed: 0: 25 MHz (VSS) 1: 125 MHz (2.5 V) Use 125 MHz for typical applications.

Table 727 • **Miscellaneous Pins *(continued)***

Name	Pin	Type	Description
RESERVED_[1:8]	C10, D13, L4, P4, L1, M1, N1, P1	NC	Leave these pins unconnected (floating).
THERMDA	C3	A	Thermal diode anode.
THERMDC_VSS	D2	A	Thermal diode cathode connected to device ground. Temperature sensor must be chosen accordingly.

1. For more information, see Initialization, page 92. For a typical bring-up example, see Configuration, page 91.

6.3.6 Power Supply

The following table lists the power supply pins and associated functional pins. All power supply pins must be connected to their respective voltage input, even if certain functions are not used for a specific application. No power supply sequencing is required. However, clock and power must be stable before releasing Reset.

Table 728 • **Power Supply Pins**

Name	Pin	Type	Description
VDD1_[1:18]	E5, E12, F5, F12, G5, G12, H5, H12, J5, J12, K5, K12, L5, L12, M5, M12, N5, N12	1.0 V	1.0 V internal digital logic.
VDD1A_[1:10]	C7, C8, C9, C13, P6, P7, P8, P9, P10, P11	1.0 V	1.0 V analog power requiring additional PCB power supply filtering. Associated with the QSGMII/SGMII MAC receiver output pins.
VDD25_[1:4]	H13, M4, M13, P3	2.5 V	2.5 V general digital power supply. Associated with the LED, GPIO, JTAG, twisted pair interface, reference filter, reference external supply connect, and recovered clock pins.
VDD25A_[1:10]	C2, C4, C6, C11, C14, E4, E13, P5, P12, P13	2.5 V	2.5 V general analog power supply.
VSS_[1:4] VSS_[6:78]	B1, B16, C5, C12 D5, D6, D7, D8, D9, D10, D11, D12, E6, E7, E8, E9, E10, E11, F4, F6, F7, F8, F9, F10, F11, G6, G7, G8, G9, G10, G11, H6, H7, H8, H9, H10, H11, J6, J7, J8, J9, J10, J11, K6, K7, K8, K9, K10, K11, L6, L7, L8, L9, L10, L11, M6, M7, M8, M9, M10, M11, N6, N7, N8, N9, N10, N11, R1, R16, D14, E14, F13, F15, G15, H15, H16, J13	0 V	General device ground.

6.3.7 SGMII/SerDes/QSGMII MAC Interface

The following table lists the SerDes MAC interface pins.

Table 729 • **SerDes MAC Interface Pins**

Name	Pin	Type	Description
RDN_0 RDP_0	P16 P15	O, ADIFF	PHY0 QSGMII/SGMII/SerDes MAC receiver output pair.
RDN_1 RDN_2 RDN_3 RDP_1 RDP_2 RDP_3	T12 T8 T4 R12 R8 R4	O, ADIFF	SGMII/SerDes MAC receiver output pair.
SerDes_Rext_0	P14	ABIAS	SerDes bias pins. Connect to a 620 Ω 1% resistor between SerDes_Rext_0 and SerDes_Rext_1.
SerDes_Rext_1	N13	ABIAS	SerDes bias pins. Connect to a 620 Ω 1% resistor between SerDes_Rext_0 and SerDes_Rext_1.
TDN_0 TDP_0	N16 N15	I, ADIFF	PHY0 QSGMII/SGMII/SerDes MAC transmitter input pair.
TDN_1 TDN_2 TDN_3 TDP_1 TDP_2 TDP_3	T13 T9 T5 R13 R9 R5	I, ADIFF	SGMII/SerDes MAC transmitter input pair.

6.3.8 SerDes Media Interface

The following table lists the SerDes media interface pins.

Table 730 • **SerDes Media Interface Pins**

Name	Pin	Type	Description
FIBRIN_0 FIBRIN_1 FIBRIN_2 FIBRIN_3	T15 T11 T7 T3	I, ADIFF	SerDes media receiver input pair.
FIBRIP_0 FIBRIP_1 FIBRIP_2 FIBRIP_3	R15 R11 R7 R3	I, ADIFF	SerDes media receiver input pair.
FIBRON_0 FIBRON_1 FIBRON_2 FIBRON_3	T14 T10 T6 T2	O, ADIFF	SerDes media transmitter output pair.
FIBROP_0 FIBROP_1 FIBROP_2 FIBROP_3	R14 R10 R6 R2	O, ADIFF	SerDes media transmitter output pair.

6.3.9 Serial Management Interface

The following table lists the serial management interface (SMI) pins. The SMI pins are referenced to VDD25 and can be set to a 2.5 V power supply.

Table 731 • **SMI Pins**

Name	Pin	Type	Description
MDC	P2	I, PD, 3 V	Management data clock. A 0 MHz to 12.5 MHz reference input is used to clock serial MDIO data into and out of the PHY.
MDINT	M2	I/O, OS, OD	Management interrupt signal. Upon reset the device will configure these pins as active-low (open drain) or active-high (open source) based on the polarity of an external 10 kΩ resistor connection. These pins can be tied together in a wired-OR configuration with only a single pull-up or pull-down resistor.
MDIO	N2	I/O, OD	Management data input/output pin. Serial data is written or read from this pin bidirectionally between the PHY and Station Manager, synchronously on the positive edge of MDC. One external pull-up resistor is required at the Station Manager, and its value depends on the MDC clock frequency and the total sum of the capacitive loads from the MDIO pins.
NRESET	M3	I, PD, ST, 3 V	Device reset. Active low input that powers down the device and sets all register bits to their default state.

6.3.10 Twisted Pair Interface

The following table lists the twisted pair interface pins.

Table 732 • **Twisted Pair Interface Pins**

Name	Pin	Type	Description
TXVNA_0 TXVNA_1 TXVNA_2 TXVNA_3	B14 B10 B6 B2	ADIFF	TX/RX channel A negative signal
TXVNB_0 TXVNB_1 TXVNB_2 TXVNB_3	B15 B11 B7 B3	ADIFF	TX/RX channel B negative signal
TXVNC_0 TXVNC_1 TXVNC_2 TXVNC_3	C15 B12 B8 B4	ADIFF	TX/RX channel C negative signal
TXVND_0 TXVND_1 TXVND_2 TXVND_3	D15 B13 B9 B5	ADIFF	TX/RX channel D negative signal
TXVPA_0 TXVPA_1 TXVPA_2 TXVPA_3	A14 A10 A6 A2	ADIFF	TX/RX channel A positive signal

Table 732 • **Twisted Pair Interface Pins *(continued)***

Name	Pin	Type	Description
TXVPB_0	A15	ADIFF	TX/RX channel B positive signal
TXVPB_1	A11		
TXVPB_2	A7		
TXVPB_3	A3		
TXVPC_0	C16	ADIFF	TX/RX channel C positive signal
TXVPC_1	A12		
TXVPC_2	A8		
TXVPC_3	A4		
TXVPD_0	D16	ADIFF	TX/RX channel D positive signal
TXVPD_1	A13		
TXVPD_2	A9		
TXVPD_3	A5		

6.4 Pins by Number

This section provides a numeric list of the pins.

A1	NC_1	C7	VDD1A_1	E13	VDD25A_7
A2	TXVPA_3	C8	VDD1A_2	E14	VSS_72
A3	TXVPB_3	C9	VDD1A_3	E15	CLK_SQUELCH_IN
A4	TXVPC_3	C10	RESERVED_1	E16	1588_SPI_CLK
A5	TXVPD_3	C11	VDD25A_4	F1	TDO
A6	TXVPA_2	C12	VSS_4	F2	TDI
A7	TXVPB_2	C13	VDD1A_4	F3	TCK
A8	TXVPC_2	C14	VDD25A_5	F4	VSS_20
A9	TXVPD_2	C15	TXVNC_0	F5	VDD1_3
A10	TXVPA_1	C16	TXVPC_0	F6	VSS_21
A11	TXVPB_1	D1	REFCLK_P	F7	VSS_22
A12	TXVPC_1	D2	THERMDC_VSS	F8	VSS_23
A13	TXVPD_1	D3	REF_FILT_A	F9	VSS_24
A14	TXVPA_0	D4	REF_REXT_A	F10	VSS_25
A15	TXVPB_0	D5	VSS_6	F11	VSS_26
A16	NC_2	D6	VSS_7	F12	VDD1_4
B1	VSS_1	D7	VSS_8	F13	VSS_73
B2	TXVNA_3	D8	VSS_9	F14	PHYADD4
B3	TXVNB_3	D9	VSS_10	F15	VSS_74
B4	TXVNC_3	D10	VSS_11	F16	RCVRDCLK1
B5	TXVND_3	D11	VSS_12	G1	LED0_0
B6	TXVNA_2	D12	VSS_13	G2	LED1_0
B7	TXVNB_2	D13	RESERVED_2	G3	LED2_0
B8	TXVNC_2	D14	VSS_71	G4	LED3_0
B9	TXVND_2	D15	TXVND_0	G5	VDD1_5
B10	TXVNA_1	D16	TXVPD_0	G6	VSS_27
B11	TXVNB_1	E1	REFCLK_SEL2	G7	VSS_28
B12	TXVNC_1	E2	TMS	G8	VSS_29
B13	TXVND_1	E3	TRST	G9	VSS_30
B14	TXVNA_0	E4	VDD25A_6	G10	VSS_31
B15	TXVNB_0	E5	VDD1_1	G11	VSS_32
B16	VSS_2	E6	VSS_14	G12	VDD1_6
C1	REFCLK_N	E7	VSS_15	G13	PHYADD2
C2	VDD25A_1	E8	VSS_16	G14	PHYADD3
C3	THERMDA	E9	VSS_17	G15	VSS_75
C4	VDD25A_2	E10	VSS_18	G16	RCVRDCLK2
C5	VSS_3	E11	VSS_19	H1	LED0_1
C6	VDD25A_3	E12	VDD1_2	H2	LED1_1

Pins by number *(continued)*

H3	LED2_1
H4	LED3_1
H5	VDD1_7
H6	VSS_33
H7	VSS_34
H8	VSS_35
H9	VSS_36
H10	VSS_37
H11	VSS_38
H12	VDD1_8
H13	VDD25_1
H14	GPIO13/1588_SPI_DO
H15	VSS_76
H16	VSS_77
J1	LED0_2
J2	LED1_2
J3	LED2_2
J4	LED3_2
J5	VDD1_9
J6	VSS_39
J7	VSS_40
J8	VSS_41
J9	VSS_42
J10	VSS_43
J11	VSS_44
J12	VDD1_10
J13	VSS_78
J14	GPIO12/1588_SPI_CS
J15	1588_DIFF_INPUT_CLK_P
J16	1588_DIFF_INPUT_CLK_N
K1	LED0_3
K2	LED1_3
K3	LED2_3
K4	LED3_3
K5	VDD1_11
K6	VSS_45
K7	VSS_46
K8	VSS_47
K9	VSS_48
K10	VSS_49
K11	VSS_50
K12	VDD1_12
K13	GPIO8/I2C_SDA
K14	GPIO9/FASTLINK-FAIL
K15	GPIO10/1588_LOAD_SAVE
K16	GPIO11/1588_PPS_0
L1	RESERVED_5
L2	1588_PPS_3
L3	COMA_MODE
L4	RESERVED_3
L5	VDD1_13
L6	VSS_51
L7	VSS_52
L8	VSS_53
L9	VSS_54
L10	VSS_55
L11	VSS_56
L12	VDD1_14
L13	GPIO4/I2C_SCL_0
L14	GPIO5/I2C_SCL_1
L15	GPIO6/I2C_SCL_2
L16	GPIO7/I2C_SCL_3
M1	RESERVED_6
M2	MDINT
M3	NRESET
M4	VDD25_2
M5	VDD1_15
M6	VSS_57
M7	VSS_58
M8	VSS_59
M9	VSS_60
M10	VSS_61
M11	VSS_62
M12	VDD1_16
M13	VDD25_3
M14	GPIO1/SIGDET1
M15	GPIO2/SIGDET2
M16	GPIO3/SIGDET3
N1	RESERVED_7
N2	MDIO
N3	1588_PPS_1
N4	1588_PPS_2
N5	VDD1_17
N6	VSS_63
N7	VSS_64
N8	VSS_65
N9	VSS_66
N10	VSS_67
N11	VSS_68
N12	VDD1_18
N13	SerDes_Rext_1
N14	GPIO0/SIGDET0
N15	TDP_0
N16	TDN_0
P1	RESERVED_8
P2	MDC
P3	VDD25_4
P4	RESERVED_4
P5	VDD25A_8
P6	VDD1A_5
P7	VDD1A_6
P8	VDD1A_7
P9	VDD1A_8
P10	VDD1A_9
P11	VDD1A_10
P12	VDD25A_9
P13	VDD25A_10
P14	SerDes_Rext_0
P15	RDP_0
P16	RDN_0
R1	VSS_69
R2	FIBROP_3
R3	FIBRIP_3
R4	RDP_3
R5	TDP_3
R6	FIBROP_2
R7	FIBRIP_2
R8	RDP_2
R9	TDP_2
R10	FIBROP_1
R11	FIBRIP_1
R12	RDP_1
R13	TDP_1

Pins by number *(continued)*

R14	FIBROP_0
R15	FIBRIP_0
R16	VSS_70
T1	NC_3
T2	FIBRON_3
T3	FIBRIN_3
T4	RDN_3
T5	TDN_3
T6	FIBRON_2
T7	FIBRIN_2
T8	RDN_2
T9	TDN_2
T10	FIBRON_1
T11	FIBRIN_1
T12	RDN_1
T13	TDN_1
T14	FIBRON_0
T15	FIBRIN_0
T16	NC_4

6.5 Pins by Name

This section provides an alphabetic list of the pins.

1588_DIFF_INPUT_CLK_N	J16	LED0_0	G1	REF_REXT_A	D4
1588_DIFF_INPUT_CLK_P	J15	LED0_1	H1	REFCLK_N	C1
1588_PPS_1	N3	LED0_2	J1	REFCLK_P	D1
1588_PPS_2	N4	LED0_3	K1	REFCLK_SEL2	E1
1588_PPS_3	L2	LED1_0	G2	RESERVED_1	C10
1588_SPI_CLK	E16	LED1_1	H2	RESERVED_2	D13
CLK_SQUELCH_IN	E15	LED1_2	J2	RESERVED_3	L4
COMA_MODE	L3	LED1_3	K2	RESERVED_4	P4
FIBRIN_0	T15	LED2_0	G3	RESERVED_5	L1
FIBRIN_1	T11	LED2_1	H3	RESERVED_6	M1
FIBRIN_2	T7	LED2_2	J3	RESERVED_7	N1
FIBRIN_3	T3	LED2_3	K3	RESERVED_8	P1
FIBRIP_0	R15	LED3_0	G4	SerDes_Rext_0	P14
FIBRIP_1	R11	LED3_1	H4	SerDes_Rext_1	N13
FIBRIP_2	R7	LED3_2	J4	TCK	F3
FIBRIP_3	R3	LED3_3	K4	TDI	F2
FIBRON_0	T14	MDC	P2	TDN_0	N16
FIBRON_1	T10	MDINT	M2	TDN_1	T13
FIBRON_2	T6	MDIO	N2	TDN_2	T9
FIBRON_3	T2	NC_1	A1	TDN_3	T5
FIBROP_0	R14	NC_2	A16	TDO	F1
FIBROP_1	R10	NC_3	T1	TDP_0	N15
FIBROP_2	R6	NC_4	T16	TDP_1	R13
FIBROP_3	R2	NRESET	M3	TDP_2	R9
GPIO0/SIGDET0	N14	PHYADD2	G13	TDP_3	R5
GPIO1/SIGDET1	M14	PHYADD3	G14	THERMDA	C3
GPIO2/SIGDET2	M15	PHYADD4	F14	THERMDC_VSS	D2
GPIO3/SIGDET3	M16	RCVRDCLK1	F16	TMS	E2
GPIO4/I2C_SCL_0	L13	RCVRDCLK2	G16	TRST	E3
GPIO5/I2C_SCL_1	L14	RDN_0	P16	TXVNA_0	B14
GPIO6/I2C_SCL_2	L15	RDN_1	T12	TXVNA_1	B10
GPIO7/I2C_SCL_3	L16	RDN_2	T8	TXVNA_2	B6
GPIO8/I2C_SDA	K13	RDN_3	T4	TXVNA_3	B2
GPIO9/FASTLINK-FAIL	K14	RDP_0	P15	TXVNB_0	B15
GPIO10/1588_LOAD_SAVE	K15	RDP_1	R12	TXVNB_1	B11
GPIO11/1588_PPS_0	K16	RDP_2	R8	TXVNB_2	B7
GPIO12/1588_SPI_CS	J14	RDP_3	R4	TXVNB_3	B3
GPIO13/1588_SPI_DO	H14	REF_FILT_A	D3	TXVNC_0	C15

Pins by name *(continued)*

TXVNC_1	B12	VDD1A_1	C7	VSS_19	E11
TXVNC_2	B8	VDD1A_2	C8	VSS_20	F4
TXVNC_3	B4	VDD1A_3	C9	VSS_21	F6
TXVND_0	D15	VDD1A_4	C13	VSS_22	F7
TXVND_1	B13	VDD1A_5	P6	VSS_23	F8
TXVND_2	B9	VDD1A_6	P7	VSS_24	F9
TXVND_3	B5	VDD1A_7	P8	VSS_25	F10
TXVPA_0	A14	VDD1A_8	P9	VSS_26	F11
TXVPA_1	A10	VDD1A_9	P10	VSS_27	G6
TXVPA_2	A6	VDD1A_10	P11	VSS_28	G7
TXVPA_3	A2	VDD25_1	H13	VSS_29	G8
TXVPB_0	A15	VDD25_2	M4	VSS_30	G9
TXVPB_1	A11	VDD25_3	M13	VSS_31	G10
TXVPB_2	A7	VDD25_4	P3	VSS_32	G11
TXVPB_3	A3	VDD25A_1	C2	VSS_33	H6
TXVPC_0	C16	VDD25A_2	C4	VSS_34	H7
TXVPC_1	A12	VDD25A_3	C6	VSS_35	H8
TXVPC_2	A8	VDD25A_4	C11	VSS_36	H9
TXVPC_3	A4	VDD25A_5	C14	VSS_37	H10
TXVPD_0	D16	VDD25A_6	E4	VSS_38	H11
TXVPD_1	A13	VDD25A_7	E13	VSS_39	J6
TXVPD_2	A9	VDD25A_8	P5	VSS_40	J7
TXVPD_3	A5	VDD25A_9	P12	VSS_41	J8
VDD1_1	E5	VDD25A_10	P13	VSS_42	J9
VDD1_2	E12	VSS_1	B1	VSS_43	J10
VDD1_3	F5	VSS_2	B16	VSS_44	J11
VDD1_4	F12	VSS_3	C5	VSS_45	K6
VDD1_5	G5	VSS_4	C12	VSS_46	K7
VDD1_6	G12	VSS_6	D5	VSS_47	K8
VDD1_7	H5	VSS_7	D6	VSS_48	K9
VDD1_8	H12	VSS_8	D7	VSS_49	K10
VDD1_9	J5	VSS_9	D8	VSS_50	K11
VDD1_10	J12	VSS_10	D9	VSS_51	L6
VDD1_11	K5	VSS_11	D10	VSS_52	L7
VDD1_12	K12	VSS_12	D11	VSS_53	L8
VDD1_13	L5	VSS_13	D12	VSS_54	L9
VDD1_14	L12	VSS_14	E6	VSS_55	L10
VDD1_15	M5	VSS_15	E7	VSS_56	L11
VDD1_16	M12	VSS_16	E8	VSS_57	M6
VDD1_17	N5	VSS_17	E9	VSS_58	M7
VDD1_18	N12	VSS_18	E10	VSS_59	M8

Pins by name *(continued)*

VSS_60	M9
VSS_61	M10
VSS_62	M11
VSS_63	N6
VSS_64	N7
VSS_65	N8
VSS_66	N9
VSS_67	N10
VSS_68	N11
VSS_69	R1
VSS_70	R16
VSS_71	D14
VSS_72	E14
VSS_73	F13
VSS_74	F15
VSS_75	G15
VSS_76	H15
VSS_77	H16
VSS_78	J13

7 Package Information

VSC8574XKS-01 and VSC8574XKS-04 are packaged in a lead(Pb)-free, 256-pin, plastic ball grid array (BGA) with a 17 mm × 17 mm body size, 1 mm pin pitch, and 1.8 mm maximum height.

Lead(Pb)-free products from Microsemi comply with the temperatures and profiles defined in the joint IPC and JEDEC standard IPC/JEDEC J-STD-020. For more information, see the IPC and JEDEC standard.

This section provides the package drawing, thermal specifications, and moisture sensitivity rating for the VSC8574-01 device.

7.1 Package Drawing

The following illustration shows the package drawing for the VSC8574-01 device. The drawing contains the top view, bottom view, side view, dimensions, tolerances, and notes.

Figure 93 • **Package Drawing**

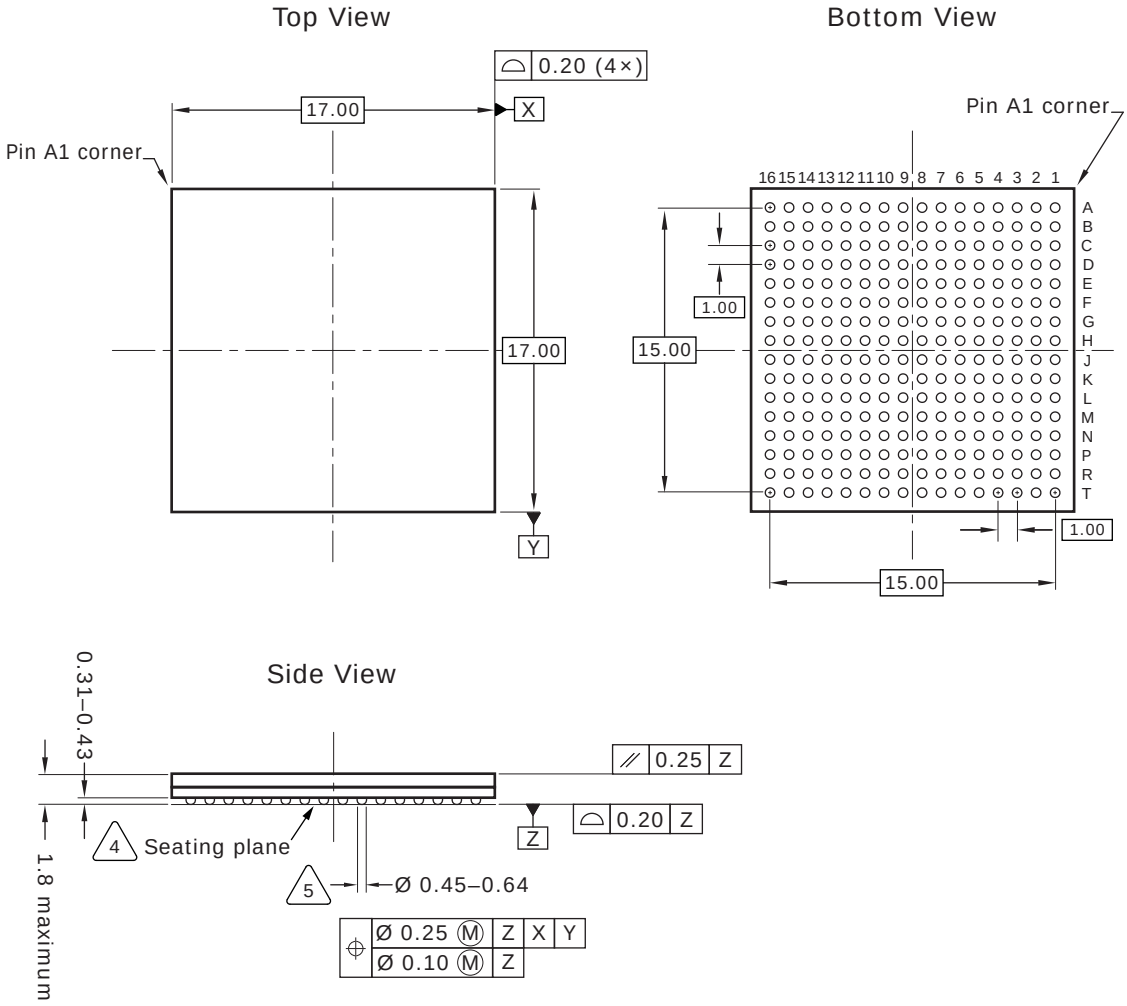

Notes

1. All dimensions and tolerances are in millimeters (mm).
2. Ball diameter is 0.50 mm.
3. Radial true position is represented by typical values.
4. Primary datum Z and seating plane are defined by the spherical crowns of the solder balls.
5. Dimension is measured at the maximum solder ball diameter, parallel to primary datum Z.

7.2 Thermal Specifications

Thermal specifications for this device are based on the JEDEC JESD51 family of documents. These documents are available on the JEDEC Web site at www.jedec.org. The thermal specifications are modeled using a four-layer test board with two signal layers, a power plane, and a ground plane (2s2p

PCB). For more information about the thermal measurement method used for this device, see the JESD51-1 standard.

Table 733 • **Thermal Resistances**

Symbol	°C/W	Parameter
θ_{JCtop}	5.9	Die junction to package case top
θ_{JB}	12.7	Die junction to printed circuit board
θ_{JA}	22	Die junction to ambient
θ_{JMA} at 1 m/s	18.5	Die junction to moving air measured at an air speed of 1 m/s
θ_{JMA} at 2 m/s	16.3	Die junction to moving air measured at an air speed of 2 m/s

To achieve results similar to the modeled thermal measurements, the guidelines for board design described in the JESD51 family of publications must be applied. For information about applications using BGA packages, see the following:

- JESD51-2A, *Integrated Circuits Thermal Test Method Environmental Conditions, Natural Convection (Still Air)*
- JESD51-6, *Integrated Circuit Thermal Test Method Environmental Conditions, Forced Convection (Moving Air)*
- JESD51-8, *Integrated Circuit Thermal Test Method Environmental Conditions, Junction-to-Board*
- JESD51-9, *Test Boards for Area Array Surface Mount Package Thermal Measurements*

7.3 Moisture Sensitivity

This device is rated moisture sensitivity level 4 as specified in the joint IPC and JEDEC standard IPC/JEDEC J-STD-020. For more information, see the IPC and JEDEC standard.

8 Design Considerations

This section provides information about design considerations for the VSC8574-01 device.

8.1 1588 timestamping for all packets

1588 timestamping of all frames that pass through is not completely supported.

The 1588 timestamping engine does not support timestamping of all incoming packets. However, it can timestamp the packets matching up to four Ethertypes in the header field. The engine can timestamp up to four packets of the following types:

- IPv4 over Ethernet packets (Ethertype 0x0800)
- IPv6 over Ethernet packets (Ethertype 0x86DD)
- VLAN-tagged packets (Ethertype 0x8100)
- MPLS over Ethernet packets (Ethertype 0x8847)
- PTP over Ethernet packets (Ethertype 0x88F7)
- OAM over Ethernet packets (Ethertype 0x8902)

The workaround is to enable only the ETH1 comparator in all three analyzers. Disable all other comparators. The engine has four ETH1 comparators that check the Ethertype (one for each full analyzer, one for engine A, and one for engine B of OAM engine). Configure timestamping of all packets coming through the PHY that match these four ETH1 Ethertypes.

8.2 AMS and 100BASE-FX

When the PHY operating mode (set in register 23) is AMS and the current active media is 100BASE-FX, register 0 bit 12 will be 0. This would normally indicate that auto-negotiation is disabled and the PHY is in forced mode. But in this mode, it has other meanings.

The workaround is to ensure that bit 12 is always written as 1 when doing writes or updates to register 0 in AMS mode.

8.3 10BASE-T signal amplitude

10BASE-T signal amplitude can be lower than the minimum specified in IEEE 802.3 paragraph 14.3.1.2.1 (2.2 V) at low supply voltages.

This issue is not estimated to present any system level impact. Performance is not impaired with cables up to 130 m with various link partners.

8.4 SNR degradation and link drops

The link may drop after approximately 100 master/slave relationship swaps with the ring resiliency feature when using Category 5 (Cat5) cables that are longer than 75 m.

The workaround is to use a combination of an initialization script and a procedure change. Contact Microsemi for the workaround solution if the ring resiliency feature is being enabled.

8.5 PBB frame corruption

PBB frames can be corrupted if PBB is enabled in only one part of the OAM engine.

When PBB matching is enabled, the number of encapsulations that can be supported on that port is reduced from 4 to 3. PTP engines do not have this restriction.

The workaround is to enable both parts of the engine for PBB when processing PBB frames in the OAM engine.

8.6 Clause 45 register 3.22

The clause 45, register 3.22 is cleared upon read only when the extended page access register (register 31) is set to 0.

This register cannot be read when the page access register is set to a value other than 0.

The workaround is to set extended page access register to 0 before accessing clause 45, register 3.22.

8.7 Clause 45 register 3.1

Clause 45, register 3.1, Rx and Tx LPI received bits are cleared upon read only when the extended page access register (register 31) is set to 0.

This has a minor implication for software that needs to ensure that the extended page access register is set to 0 before reading clause 45, register 3.1.

The workaround is to set extended page access register to 0 before accessing clause 45, register 3.1.

8.8 Clause 45 register address post-increment

Clause 45 register address post-increment only works when reading registers and only when extended page access register (register 31) is set to 0.

The workaround is to access the registers individually.

8.9 Fast link failure indication

The fast link failure indication for all the ports is enabled using port 0, register 19E.4.

The workaround is to set register 19E.4 = 1 in PHY 0 to enable Fast Link Fail indication.

8.10 Timestamp accuracy in 10BASE-T mode

Timestamp accuracy in 10BASE-T mode is ±400 ns.

Timing accuracy is reduced on networks running in 10BASE-T mode. There is currently no workaround for this issue.

8.11 Near-end loopback with AMS enabled

Near-end loopback does not work when AMS is enabled. Near-end loopback is controlled by setting bit 14 of register 0.

The workaround is to disable AMS when enabling loopback. This is a debug feature and does not have any real life implications.

8.12 Carrier detect assertion

Carrier detect assertion is set to false incorrectly when 9 out of 10 bits in the K28.1 word are in error.

No real life implication is expected, because the event that can trigger this error is extremely unlikely. If it does occur, the link may drop momentarily and come back up.

8.13 Link status not correct in register 24E3.2 for 100BASE-FX operation

The link status in register 24E3.2 only reflects the status of 1000BASE-X links. It does not reflect the status of 100BASE-FX links.

The workaround is to check register 28.4:3 for media operating mode (10 for fiber), 28.4:3 for speed status (100 for 100 Mbps), and then check 16.12 for current link status.

8.14 Register 28.14 does not reflect autonegotiation disabled in 100BASE-FX mode

Register 28.14 does not reflect autonegotiation status in 100BASE-FX mode. It works correctly in all copper and 1000BASE-X media modes.

The workaround is to use register 0.12 for autonegotiation status in 100BASE-FX mode when AMS is disabled. For more information about limitations when AMS is enabled, see AMS and 100BASE-FX, page 394.

8.15 Internal clock disabled when media switches from fiber to copper with autonegotiation disabled

When the device switches from fiber to copper media when autonegotiation is disabled, an internal clock may be stuck low causing the device to not pass traffic correctly.

The workaround is to write a value of 0xC040 to register 0 when switching media from fiber to copper.

8.16 Near-end loopback non-functional in protocol transfer mode

Near-end loopback does not work correctly when the device is configured in protocol transfer mode.

This is a debug feature and does not have any effect on the normal operation of the device.

8.17 Fiber-media recovered clock does not squelch based on link status

To squelch the clock in fiber media mode, code sync status is used instead of link status. This causes the clock to not be squelched if the device is configured in 1000BASE-X mode with autonegotiation enabled when the transmit fiber is unplugged.

There is a software workaround for this issue where the device's internal microcontroller monitors link status and forces the clock off when no link is present.

8.18 1000BASE-X parallel detect mode with Clause 37 autonegotiation enabled

When connected to a forced-mode link partner and attempting autonegotiation, the PHY in 1000BASEX parallel detect mode requires a minimum 250 ms IDLE stream in order to establish a link. If the PHY port is programmed with 1000BASE-X parallel detect-enabled (MAC-side register 16E3 bit 13, or media-side register 23E3 bit 13), then a forced-mode link partner sending traffic with an inter-packet gap less than 250 ms will not allow the local device’s PCS to transition from a link-down to link-up state.

8.19 Anomalous PCS error indications in Energy Efficient Ethernet mode

When a port is processing traffic with Energy Efficient Ethernet enabled on the link, certain PCS errors (such as false carriers, spurious start-of-stream detection, and idle errors) and EEE wake errors may occur. There is no effect on traffic bit error rate for cable lengths up to 75 meters, and minor packet loss may occur on links longer than 75 meters. Regardless of cable length, some error indications should not be used while EEE is enabled. These error indications include false carrier interrupts (Interrupt Status register 26 bit 3), receive error interrupts (Interrupt Status register 26 bit 0), and EEE wake error interrupts.

Contact Microsemi for a script that needs to be applied during system initialization if EEE will be enabled.

8.20 Timestamp errors due to IEEE 1588 Reference Clock interruption

Interruption of the IEEE 1588 Reference Clock after release of device hardware reset will corrupt the Local Time Counter value and may cause loss of timestamp coherency of the 1588 Processor. After clock interruption, a Local Time Counter reload as well as execution of the 1588 Out-of-Sync Recovery routine within the Unified API is required. Contact Microsemi for the Unified API with these capabilities.

8.21 Out-of-sync FIFOs in the 1588 engine

Link-down events interrupting live traffic flow on the MAC or media interfaces of the device may cause loss of time stamp coherency within different blocks of the 1588 Processor unit. The workaround to resolve this issue is to execute a 1588 Out-of-Sync Recovery routine within the Unified API. Contact Microsemi for the Unified API with this capability.

8.22 1588 bypass and datapath loopbacks ignore IDLE symbol boundaries

The 1588 IP block bypass feature as well as Loopback Testing features do not wait for IDLE periods in the data stream before taking effect. A change in 1588 bypass or test loopback state during a live traffic flow may corrupt a frame within that traffic stream. Any change of the 1588 bypass or test loopback state during a live traffic flow should be followed by an execution of a 1588 Out-of-Sync Recovery routine within the Unified API. Note that the Out-of-Sync Recovery routine must be executed as the final step to restore the operational datapath, and the link will be down while the routine is executing. Contact Microsemi for the Unified API with 1588 Out-of-Sync Recovery capability.

8.23 1588 bypass shall be enabled during engine reconfiguration

When the 1588 datapath is enabled, the 1588 bypass feature shall be enabled before reprogramming 1588 configuration registers. It is recommended to disable 1588 bypass before live traffic begins flowing through the re-provisioned port.

9 Ordering Information

The VSC8574-01 device is offered with two operating temperature ranges. The range for VSC8574-01 is 0 °C ambient to 125 °C junction, and the range for VSC8574-04 is -40 °C ambient to 125 °C junction.

VSC8574XKS-01 and VSC8574XKS-04 are packaged in a lead(Pb)-free, 256-pin, plastic ball grid array (BGA) with a 17 mm × 17 mm body size, 1 mm pin pitch, and 1.8 mm maximum height.

Lead(Pb)-free products from Microsemi comply with the temperatures and profiles defined in the joint IPC and JEDEC standard IPC/JEDEC J-STD-020. For more information, see the IPC and JEDEC standard.

The following table lists the ordering information for the VSC8574-01 device.

Table 734 • **Ordering Information**

Part Order Number	Description
VSC8574XKS-01	Lead-free, 256-pin, plastic BGA with a 17 mm × 17 mm body size, 1 mm pin pitch, and 1.8 mm maximum height. The operating temperature is 0 °C ambient to 125 °C junction[1].
VSC8574XKS-04	Lead-free, 256-pin, plastic BGA with a 17 mm × 17 mm body size, 1 mm pin pitch, and 1.8 mm maximum height. The operating temperature is –40 °C ambient to 125 °C junction[1].

1. For carrier class applications, the maximum operating temperature is 110 °C junction.