VSC7975, VSC7977

VITESSE

1/2/4 Gbps Multirate Transimpedance Amplifier

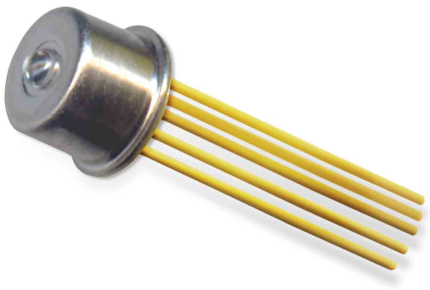

APPLICATION DIAGRAM:

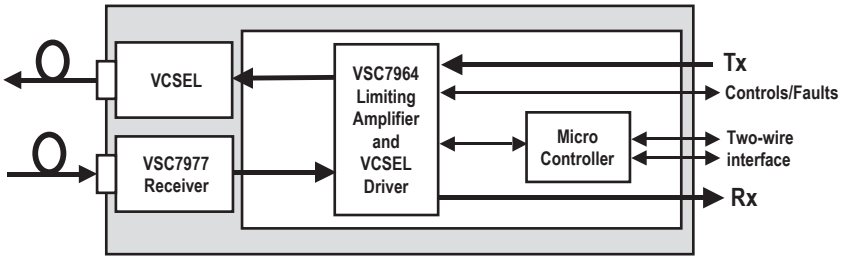

FEATURES:	BENEFITS:
Dual Bandwidth Selection	Allows the User to Optimize the Bandwidth of the TIA to the Incoming Optical Line Rate, which Improves the Optical Input Sensitivity at Lower Data Rates and Provides Superior Interoperability with Legacy Optical Devices
6kΩ Differential Transimpednace	Provides High Gain and Improved Sensitivity
Linear Optical Power Monitor	Facilitates an Accurate Measurement of the Incoming Optical Power, Enhancing the Diagnostics Capabilities of the System without Using External Components
On-chip Photo Diode Filter	Provides a Positive Bias to the Photodetector, Eliminating the Need for External Components
Extended Operating Temperature	Supports Industrial Temperature Applications
Available as Bare Dice or in a 5-pin TO-46 Package	Available in a TO-46 Package, Reducing the Time and Costs Associated with the Design, Assembly and Test of the Receiver

SPECIFICATIONS:

- Input Noise: 400nA
- Supply Current: 30mA
- Sensitivity at 4.25G (in OMA): 18.4dBm
- Max Input Current: 2.2 mA
- Supply Voltage: 3.3V
- Operating Temp: -40C to +105C (Case)

APPLICATIONS:

- Gigabit Ethernet Transceivers
- Fibre Channel Transceivers (1x, 2x and 4x)
- Infiniband Transceivers

SFP PRO

VSC7975, VSC7977

1/2/4 Gbps Multirate Transimpedance Amplifier

GENERAL DESCRIPTION:

The VSC7975 and VSC7977 are multirate transimpedance amplifiers for Gigabit Ethernet, Fibre Channel, and Infiniband applications. The devices provide a means for adjusting their bandwidth to allow full compliance with multiple Gigabit Ethernet, Fibre Channel, and Infiniband standards. The VSC7975 and VSC7977 are equipped with a single pin that serves both as a control for bandwidth as well as a linear received optical power monitor. This allows the device to have multirate bandwidth control, power monitoring, and differential outputs and be assembled in a standard 5-pin TO-46 package. A space-saving filter connection is provided for positive bias to the photodiode through a filter resistor to VCC.

The VSC7977 is available in die form or 5-pin TO-46 package with short wavelength PIN photo detector. The VSC7975 is available in a 5-pin TO-46 package with long wavelength PIN photo detector.

BLOCK DIAGRAMS:

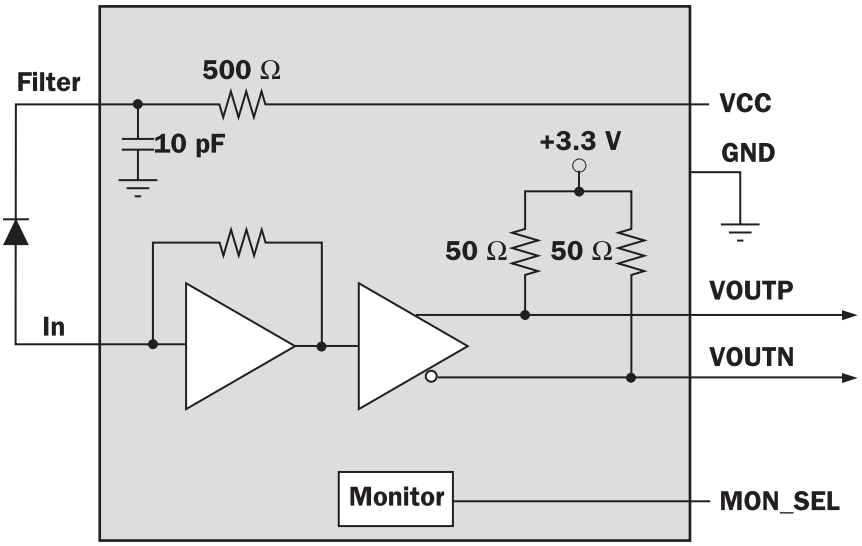

For more information on Vitesse Products visit the Vitesse web site at www.vitesse.com or contact Vitesse Sales at (800) VITESSE or sales@vitesse.com

VITESSE
741 Calle Plano
Camarillo, CA 93012, USA
Tel: +1 805.388.3700
Fax: +1 805.987.5896
www.vitesse.com

©2004 Vitesse Semiconductor Corporation