Preliminary Data Sheet

VSC7937

Single Supply 2.5Gb/s Voltage Driver

Features

- Typical Rise Times of 100ps
- High-Speed Operation (Up to 2.5Gb/s NRZ Data)
- 3V Output Voltage Compliance
- Single-Ended or Differential Input Operation
- Single Power Supply: +5V or -5.2V
- Direct Access to Modulation and Bias FETs
- On-Die MUX for Clocked or Unclocked Applications
- On-Chip 50Ω Input Clock and Data Termination

Applications

- SONET/SDH @ 622Mb/s, 1.244Gb/s, 2.488Gb/s
- Full-Speed Fibre Channel (1.062Gb/s)

General Description

The VSC7937 is a single -5.2V supply, 2.5Gb/s voltage driver with direct access to the output modulation and bias FETs. The output stage can drive 60mA into 50Ω with adequate output voltage compliance. Output bias and modulation currents are set by external components allowing precision monitoring and setting of the output voltage levels.

VSC7937 Block Diagram

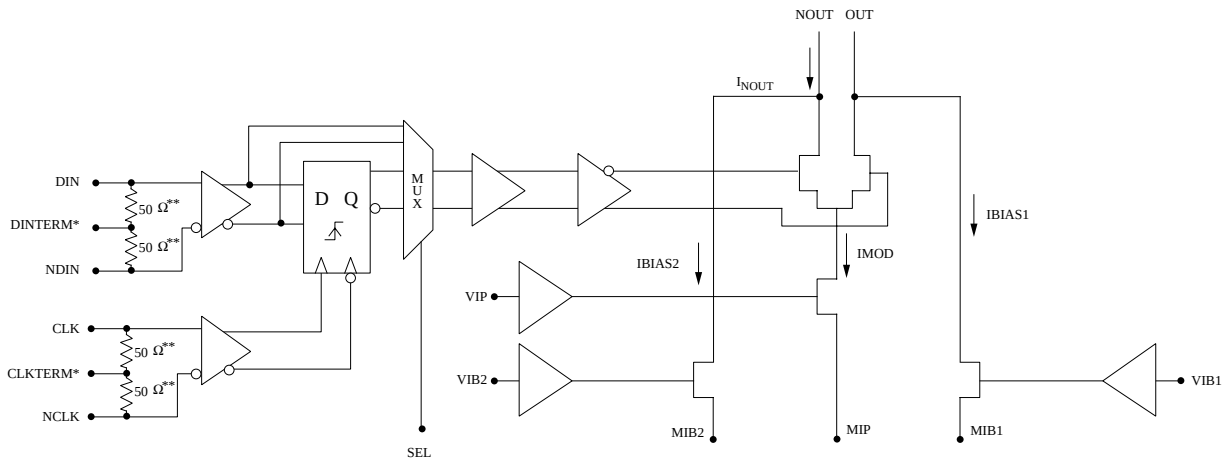

*Terminated to Off-chip Capacitor
**On Die Components

© ***VITESSE*** *SEMICONDUCTOR CORPORATION* • 741 Calle Plano • Camarillo, CA 93012
Tel: (800) VITESSE • FAX: (805) 987-5896 • Email: prodinfo@vitesse.com
Internet: www.vitesse.com

Electrical Characteristics

Table 1: High-Speed Inputs and ECL Outputs

V_{SS} = -5.2V, R_L = 50Ω at I_{OUT} pin

Symbol	*Parameter*	*Min*	*Typ*	*Max*	*Units*	*Conditions*
V_{IN}	Single-Ended Input Voltage Swing	300	—	1500	mVp-p	V_{CM} = -2.0V
V_{CM}	Differential Input Common-Mode Range	-2.3	—	-1.3	V	V_{SS} = -5.2V
V_{OH}	ECL Output HIGH Voltage	-1200	—	—	mV	50Ω to -2.0V
V_{OL}	ECL Output LOW Voltage	—	—	-1600	mV	50Ω to -2.0V
V_{IN}	On-Chip Terminations	35	—	65	Ω	
I_{NOUT}	Maximum Peak Current(1)	60	—	—	mA	VIP = VSS + 1.4V VIB1 = -5.2V VIB2 = -5.2V DIN = LOW
I_{NOUT}	Maximum Peak Current	—	—	4	mA	VIP = -4.1V VIB1 = -5.2V VIB2 = -5.2V DIN = HIGH
$t_{R,}$ t_F	Rise and Fall Times	—	—	100	ps	20% to 80%
V_{OUT}	Output Voltage	—	—	-3.0	V	VIP = -4.1V VIB1 = -5.2V VIB2 = -5.2V DIN = LOW
t_{SU}	Set-up Time - Data to CLK	20	50	—	ps	
t_H	Hold Time	—	50	90	ps	

NOTE: (1) 100mA when R_L = 30Ω at (N) OUT pin.

Table 2: DC Characteristics

Symbol	*Parameter*	*Min*	*Typ*	*Max*	*Units*	*Conditions*
V_{SS}	Power Supply Voltage	-5.5	-5.2	-4.75	V	
$I_{BIAS1,}$ I_{BIAS2}	Maximum Bias Current	30	—	—	mA	VIB1, 2 = VSS + 1.8V VIP = -5.2V
V_{DCC}	Duty-Cycle Control Voltage	V_{SS}	—	V_{SS} + 3V	V	
V_{IH}	HIGH Level Input Voltage	-1.15	-0.9	-0.8	V	V_{REF} = 1.3V
V_{IL}	LOW Level Input Voltage	—	-1.7	-1.45	V	V_{REF} = 1.3V
VIB1, VIB2	BIAS Control Voltage	V_{SS}	—	V_{SS} +1.8	V	
VIP	Modulation Control Voltage	V_{SS}	—	V_{SS} +1.4	V	

© *VITESSE SEMICONDUCTOR CORPORATION* • 741 Calle Plano • Camarillo, CA 93012
Tel: (800) VITESSE • FAX: (805) 987-5896 • Email: prodinfo@vitesse.com
Internet: www.vitesse.com

Table 3: Power Dissipation

Symbol	*Parameter*	*Min*	*Typ*	*Max*	*Units*	*Conditions*
I_{SS}	Power Supply Current (V_{SS})	—	—-	120	mA	V_{SS} = -5.5V, I_{MOD} = I_{BIAS} = 0mA
P_D	Total Power Dissipation	—	—	700	mW	V_{SS} = -5.5V, I_{MOD} = I_{BIAS} = 0 mA

Table 4: Package Thermal Specifications

Symbol	*Parameter*	*Min*	*Typ*	*Max*	*Units*	*Conditions*
θ_{JCC}	Thermal Resistance from Junction to Case	—	25	—	°C/W	Ceramic Package
θ_{JCP}	Thermal Resistance from Junction to Case	—	15	—	°C/W	Plastic Package

Table 5: MUX Select Logic Table

Symbol	*Rating*
VSS	Clocked Data In
GND	Non-clocked Data In
NC	Non-clocked Data In

Absolute Maximum Ratings(1)

Power Supply Voltage (V_{SS}) ..... V_{CC} to -6.0V
Operating Junction Temperature Range (T_J)..... -55°C to +125°C
Storage Temperature Range (T_S)..... -65°C to +150°C

NOTE: (1) CAUTION: Stresses listed under "Absolute Maximum Ratings" may be applied to devices one at a time without causing permanent damage. Functionality at or above the values listed is not implied. Exposure to these values for extended periods may affect device reliability.

Recommended Operating Conditions

Positive Voltage Rail (GND).....0V
Negative Voltage Rail (V_{SS})..... -5.2V
Operational Case Temperature Range (T_C)(1) ..... -40°C to +85°C

NOTE: (1) Lower limit of specification is ambient temperature and upper limit is case temperature

© ***VITESSE*** *SEMICONDUCTOR CORPORATION* • 741 Calle Plano • Camarillo, CA 93012
Tel: (800) VITESSE • FAX: (805) 987-5896 • Email: prodinfo@vitesse.com
Internet: www.vitesse.com

Figure 1: On-Chip Data and Clock Input Configuration

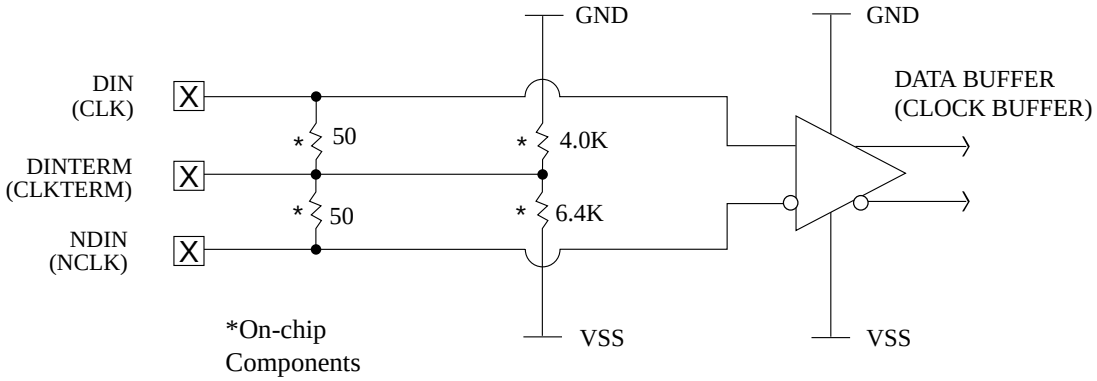

Figure 2: Single-Ended Operation

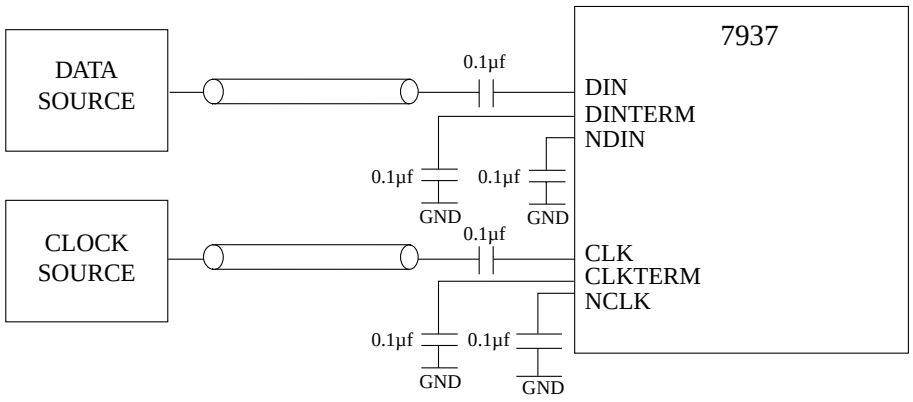

Figure 3: Single-Ended AC-Coupled

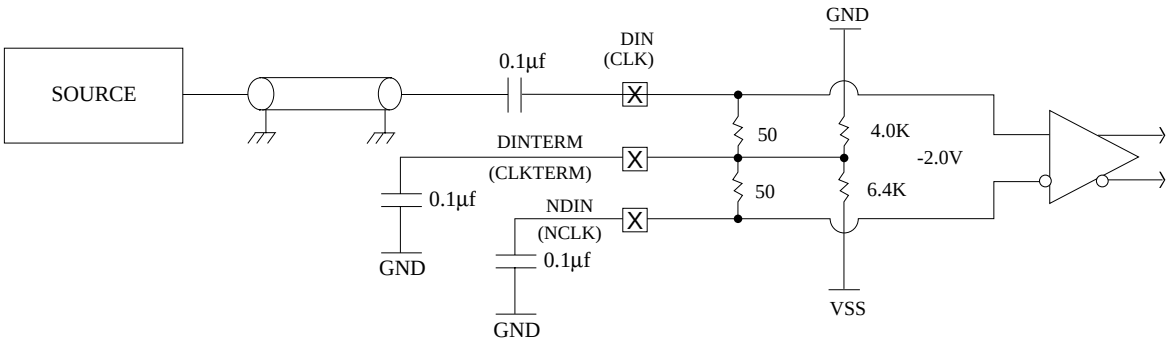

© ***VITESSE*** *SEMICONDUCTOR CORPORATION* • 741 Calle Plano • Camarillo, CA 93012
Tel: (800) VITESSE • FAX: (805) 987-5896 • Email: prodinfo@vitesse.com
Internet: www.vitesse.com

Figure 4: Differential AC-Coupled

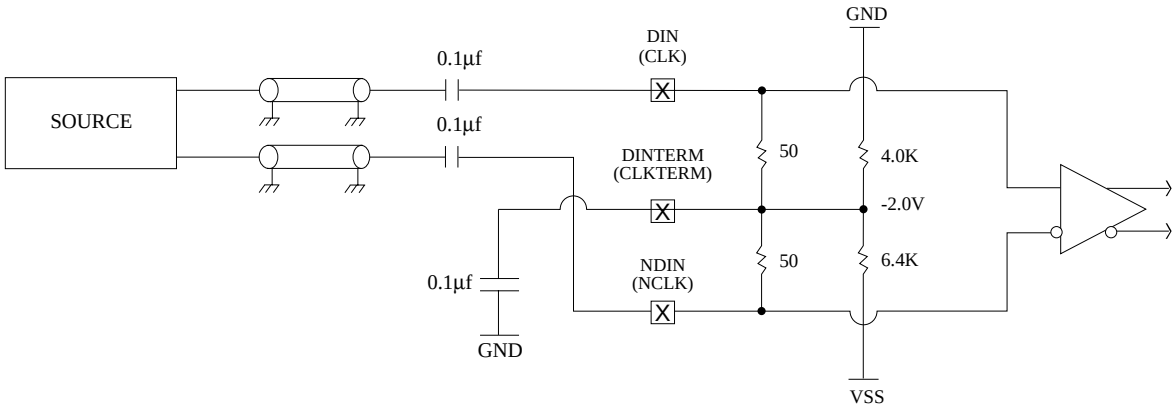

Figure 5: Differential DC-Coupled/Differential ECL

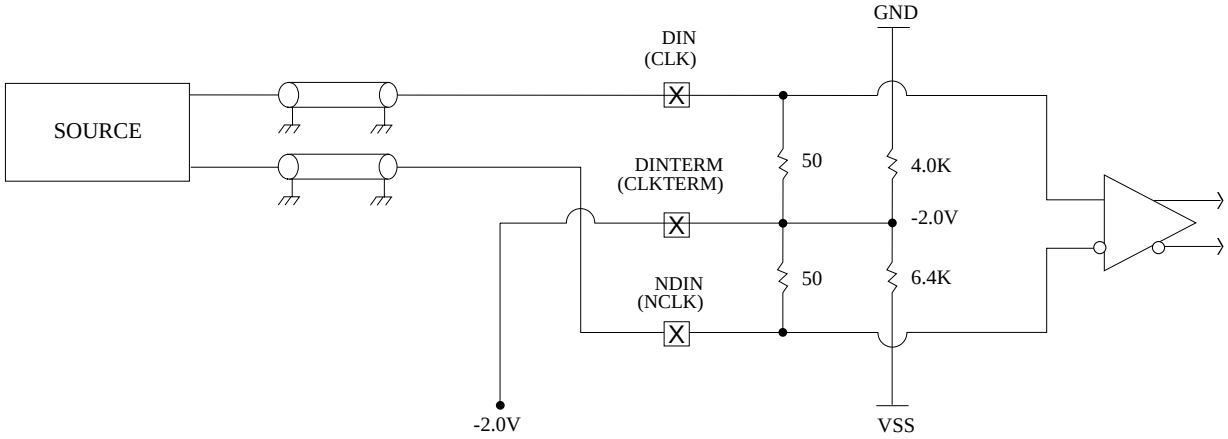

© ***VITESSE*** *SEMICONDUCTOR CORPORATION* • 741 Calle Plano • Camarillo, CA 93012
Tel: (800) VITESSE • FAX: (805) 987-5896 • Email: prodinfo@vitesse.com
Internet: www.vitesse.com

Figure 6: Control Signals VIP and VIB

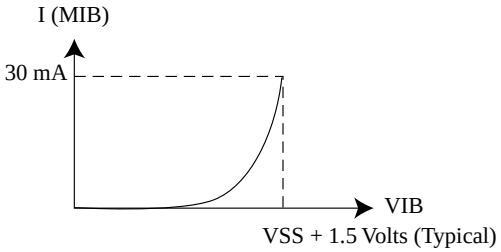

Typical Bias Current v.s. Bias Voltage

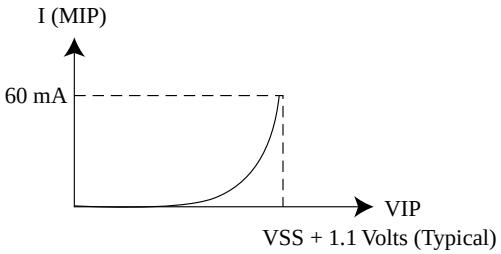

Typical Modulation Current v.s. Modulation Voltage

Figure 7: Simplified Output Structure

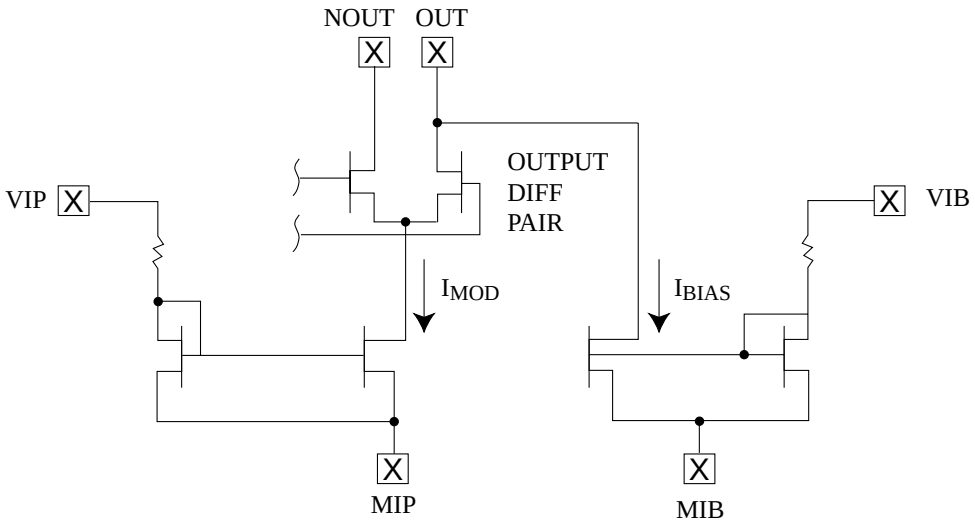

© *VITESSE SEMICONDUCTOR CORPORATION* • 741 Calle Plano • Camarillo, CA 93012
Tel: (800) VITESSE • FAX: (805) 987-5896 • Email: prodinfo@vitesse.com
Internet: www.vitesse.com

Bare Die Pad Descriptions

Figure 8: Pad Assignments for VSC7937 Die

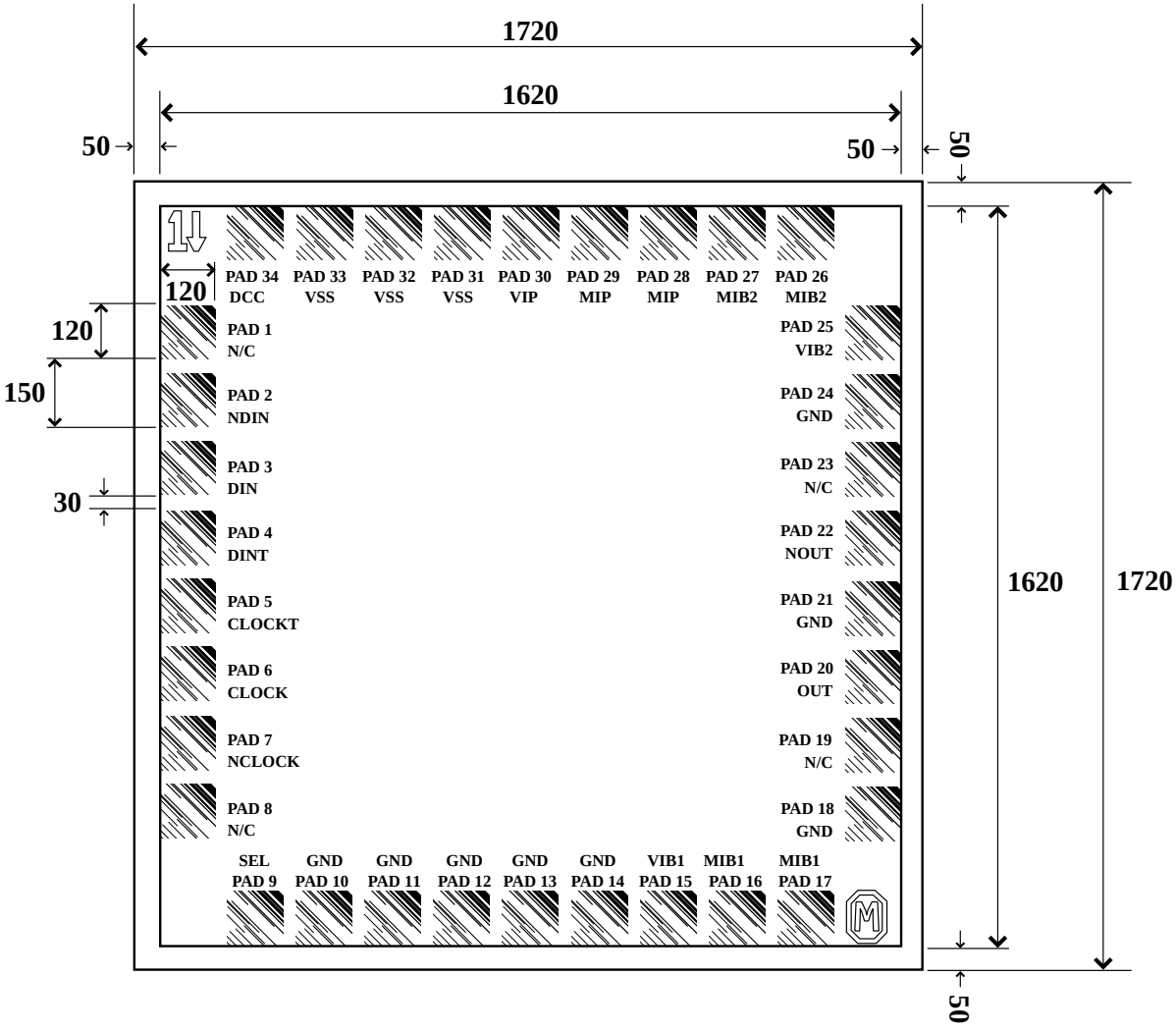

Dimensions in micrometers (µm).

© ***VITESSE*** *SEMICONDUCTOR CORPORATION* • 741 Calle Plano • Camarillo, CA 93012
Tel: (800) VITESSE • FAX: (805) 987-5896 • Email: prodinfo@vitesse.com
Internet: www.vitesse.com

Package Pin Information

Table 6: Pin Identifications

Signal	*Type*	*Level*	*# Pins*	*Description*
DIN, NDIN	In		2	Data Input and Data Reference
DINTERM	Ref	DC	1	Data Termination
CLK, NCLK	In		2	Clock Input and Clock Reference
CLKTERM	Ref	DC	1	Clock Termination
NOUT	Out		1	Modulation Current Output (complementary)
OUT	Out		1	Modulation Current Output (to Laser Cathode)
VSS	Pwr	Pwr	2	Negative Voltage Rail
GND	Pwr	Pwr	6/14(1)	Positive Voltage Rail
VIP	In	DC	1	Modulation Control Node
MIP	In	DC	1	Modulation Monitor Node
VIB1, 2	In	DC	2	Bias Control Node
MIB1, 2	In	DC	2	Bias Monitor Node
DCC	In	DC	1	Duty Cycle Control
SEL	In	DC	1	Clk/Non-clk Data Select
Total Pins			24/32(1)	

NOTE: (1) Applicable to 32-pin TQFP package only

© ***VITESSE*** *SEMICONDUCTOR CORPORATION* • 741 Calle Plano • Camarillo, CA 93012
Tel: (800) VITESSE • FAX: (805) 987-5896 • Email: prodinfo@vitesse.com
Internet: www.vitesse.com

Figure 9: Pin Diagram—24-Pin Ceramic Package

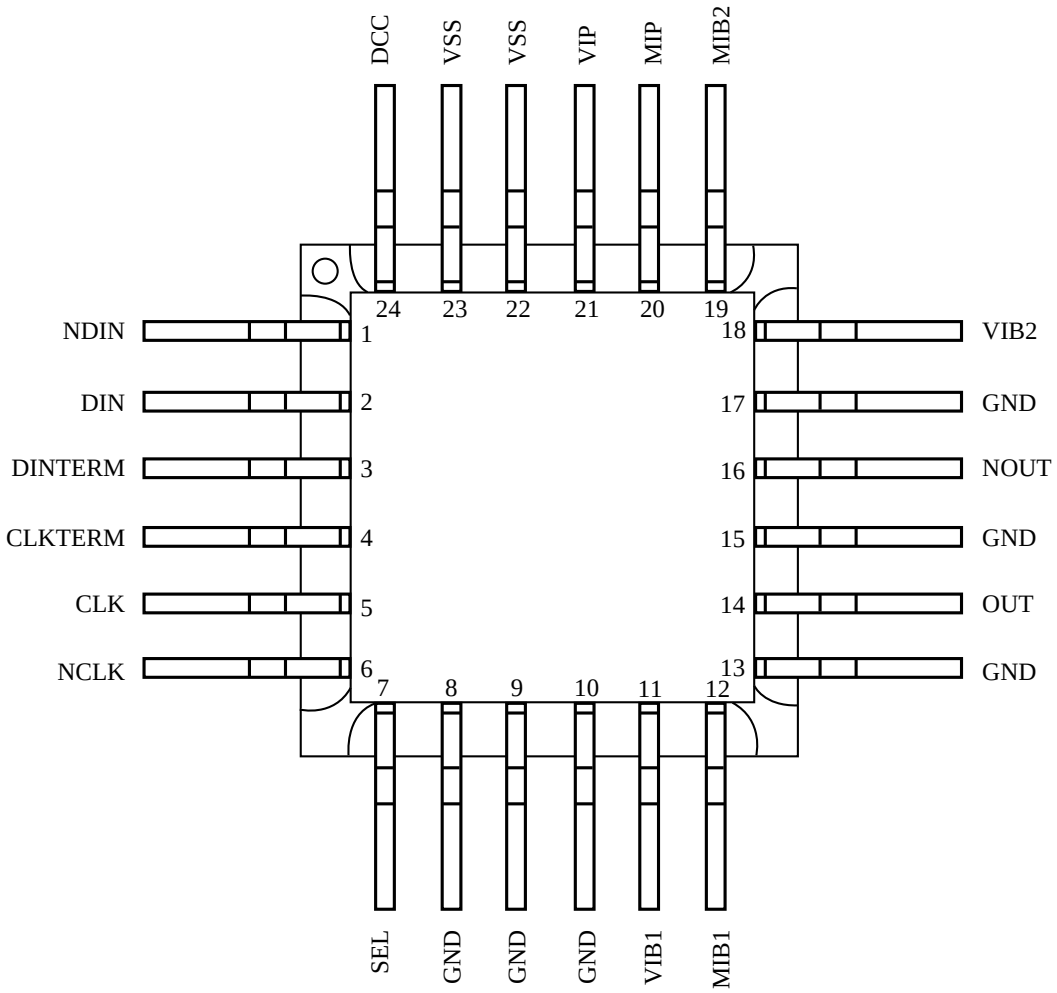

© ***VITESSE*** *SEMICONDUCTOR CORPORATION* • 741 Calle Plano • Camarillo, CA 93012
Tel: (800) VITESSE • FAX: (805) 987-5896 • Email: prodinfo@vitesse.com
Internet: www.vitesse.com

Figure 10: Pin Diagram—32-Pin Plastic Package

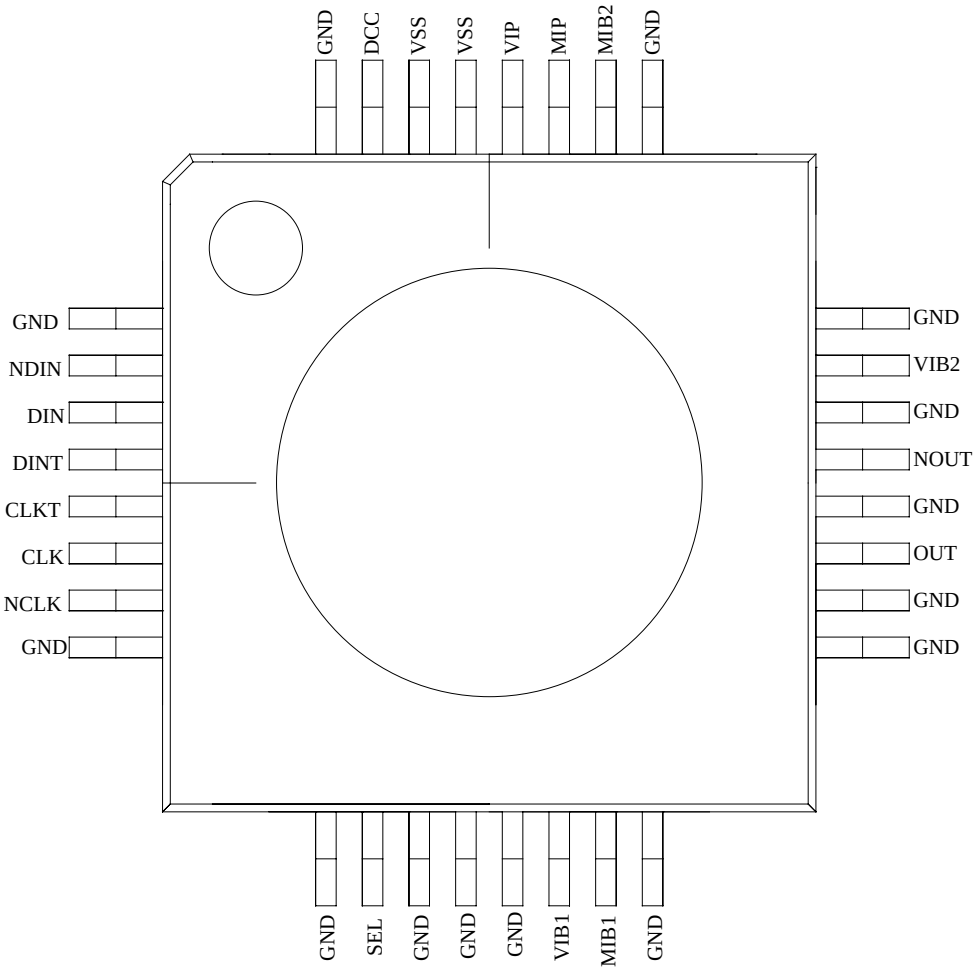

© ***VITESSE*** *SEMICONDUCTOR CORPORATION* • 741 Calle Plano • Camarillo, CA 93012
Tel: (800) VITESSE • FAX: (805) 987-5896 • Email: prodinfo@vitesse.com
Internet: www.vitesse.com

Package Information—24-Pin Ceramic Package (Formed Leads)

Top View

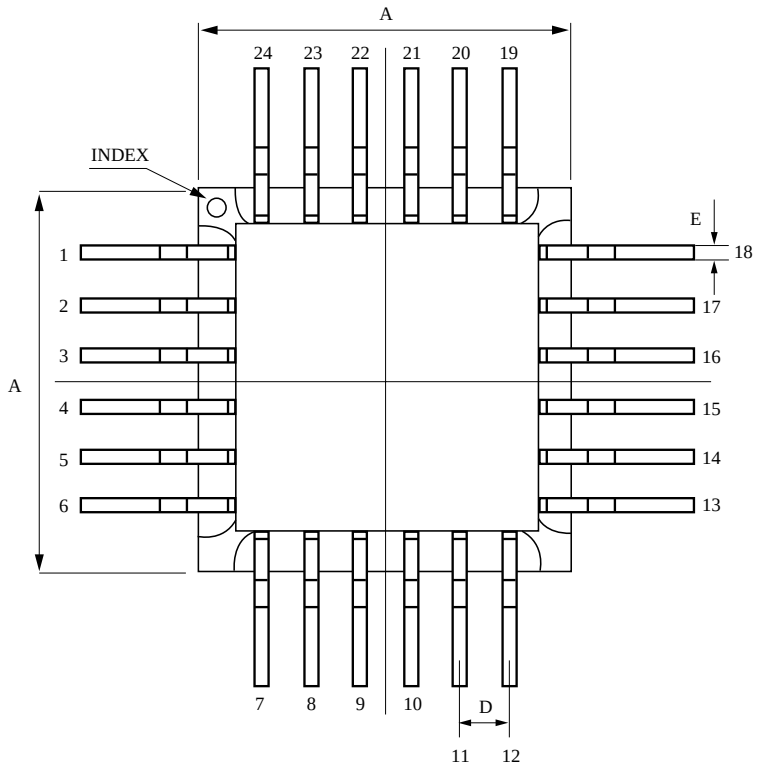

Key	*mm*	*In*
A	9.5	0.374
B	7.7	0.303
C	2.0	0.079
D	1.27	0.050
E	0.30	0.012
F	1.7	0.067
G	0.6	0.024
H	11.5	0.453
I	0.125	0.005
J	8.51	0.335

Side View

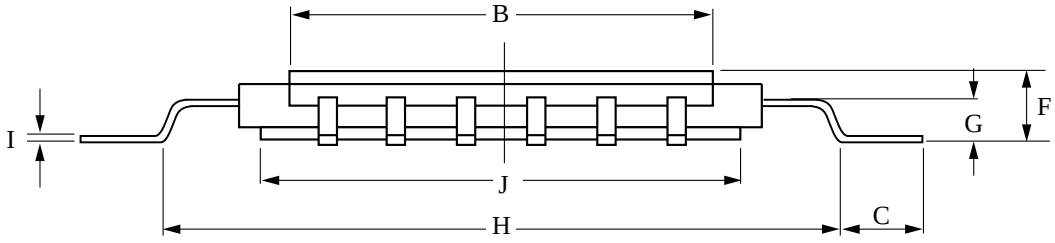

NOTES: Drawing not to scale.
Package #: 101-000-0 Issue #:1

© ***VITESSE*** *SEMICONDUCTOR CORPORATION* • 741 Calle Plano • Camarillo, CA 93012
Tel: (800) VITESSE • FAX: (805) 987-5896 • Email: prodinfo@vitesse.com
Internet: www.vitesse.com

Package Information—24-Pin Ceramic Package (Straight Leads)

Top View

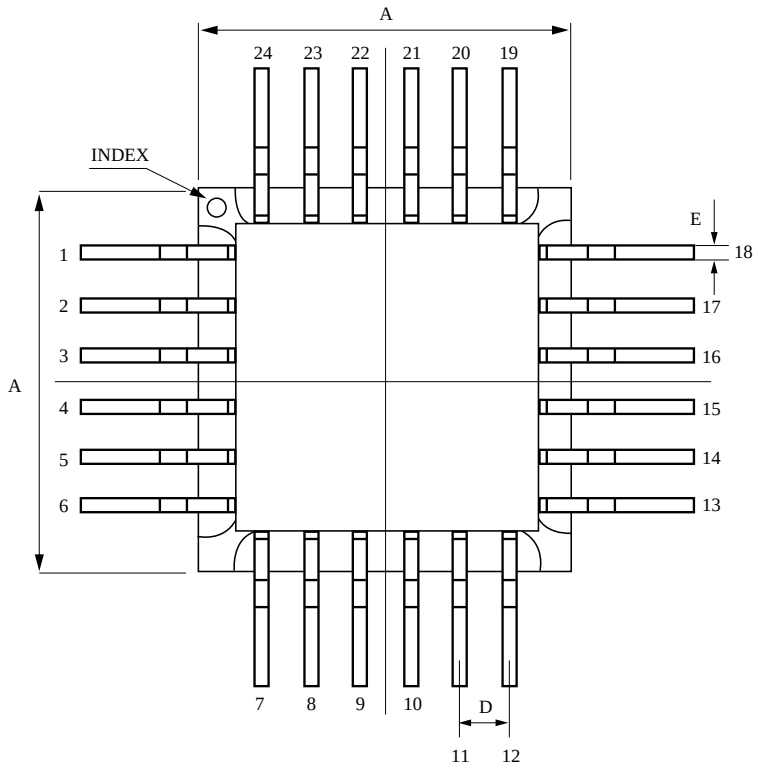

Key	*mm*	*In*
A	9.5	0.374
B	7.7	0.303
C	5.8	.230
D	1.27	0.050
E	0.30	0.012
F	1.7	0.067
G	0.6	0.024
H	9.53	0.375
I	0.125	0.005
J	8.51	0.335

Side View

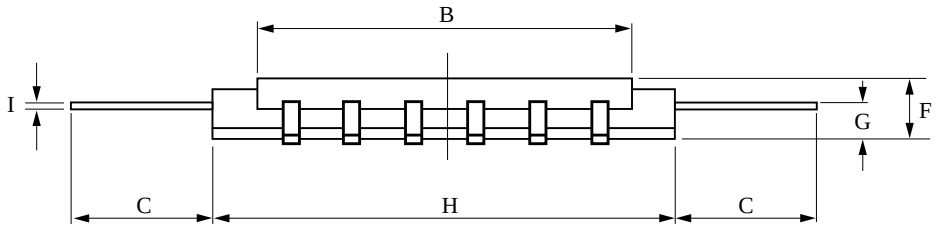

NOTES: Drawing not to scale.
Package #: 101-000-0 Issue #:1

© ***VITESSE*** *SEMICONDUCTOR CORPORATION* • 741 Calle Plano • Camarillo, CA 93012
Tel: (800) VITESSE • FAX: (805) 987-5896 • Email: prodinfo@vitesse.com
Internet: www.vitesse.com

Package Information—32 Pin Plastic TQFP Package

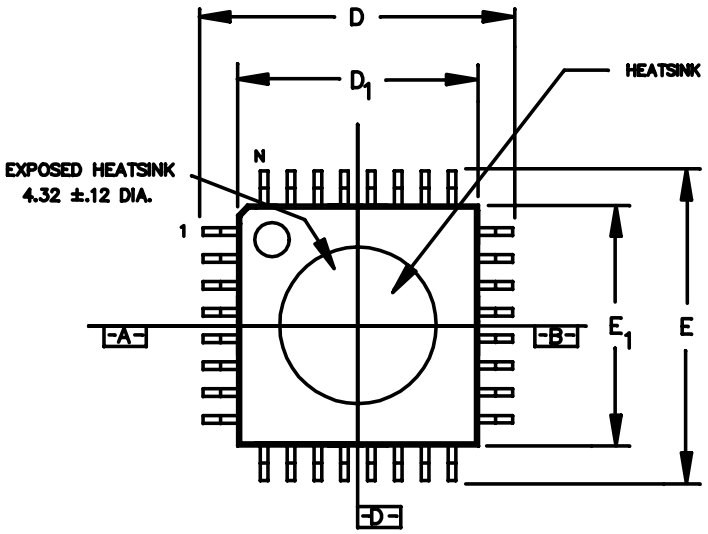

Dimension	*mm*	*Tolerance*
A	1.60	MAX
A1	.10	±.05
A2	1.40	±.05
D	9.00	±.20
D1	7.00	±.10
E	9.00	±.20
E1	7.00	±.10
L	.60	+.15/-.10
e	.80	BASIC
b	.35	±.05
θ	0º - 7º	
ddd	.20	MAX
ccc	.10	MAX

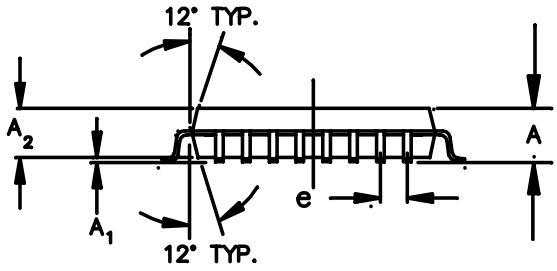

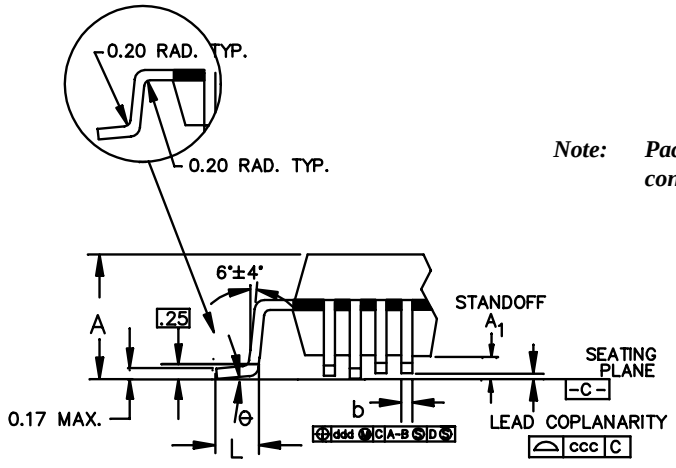

NOTES:
1) ALL DIMENSIONS IN MM.
2) DIMENSIONS SHOWN ARE NOMINAL WITH TOL. AS INDICATED
3) L/F: EFTEC 64T COPPER OR EQUIVALENT, 0.127 MM (.005") THICK.
4) FOOT LENGTH "L" IS MEASURED AT GAGE PLANE, AT 0.25 ABOVE THE SEATING PLANE.

Note: ***Package lid and bottom heat spreader are electrically connected to GND within the package.***

© ***VITESSE*** *SEMICONDUCTOR CORPORATION* • 741 Calle Plano • Camarillo, CA 93012
Tel: (800) VITESSE • FAX: (805) 987-5896 • Email: prodinfo@vitesse.com
Internet: www.vitesse.com

Ordering Information

The order number for this product is formed by a combination of the device number, and package style.

VSC7937 XX

Device Type
VSC7937: 2.5Gb/s Voltage/EML Driver

Package Style
KJ: (Ceramic - Straight Leads)
KJL: (Ceramic- Formed Leads)
KJRL: (Ceramic - Reversed Formed Leads}*
RA: (32 Pin QFP Gull Wing Plastic Package}
X : (Bare Die)

*Optional Reversed Formed Leads: Package leads have the same profile and dimensions, but heat spreader is away from board. Please contact the factory for additional information.

Notice

Vitesse Semiconductor Corporation (“Vitesse”) provides this document for informational purposes only. This document contains pre-production information about Vitesse products in their concept, development and/or testing phase. All information in this document, including descriptions of features, functions, performance, technical specifications and availability, is subject to change without notice at any time. Nothing contained in this document shall be construed as extending any warranty or promise, express or implied, that any Vitesse product will be available as described or will be suitable for or will accomplish any particular task.

Vitesse products are not intended for use in life support appliances, devices or systems. Use of a Vitesse product in such applications without written consent is prohibited.

© ***VITESSE*** *SEMICONDUCTOR CORPORATION* • 741 Calle Plano • Camarillo, CA 93012
Tel: (800) VITESSE • FAX: (805) 987-5896 • Email: prodinfo@vitesse.com
Internet: www.vitesse.com